TR 622 top3 | Article number: 6220130

Description



- Digital time switch with weekly program
- 2 channels
- Programming by app possible
- Safe transfer via optional Bluetooth Low Energy OBELISK top3
- Maximum manipulation security, time switch programs can only be transferred from the app to the time switch when the Bluetooth OBELISK top3 is plugged into the time switch
- 100 % compatible with top2
- 3 special programs (small annual program)
- 2 external inputs
- Connectable sensors (external selector switch, sequence timer)
- Connectable switches (ON or OFF permanent switching)
- Channel switching and channel locking possible
- DuoFix spring terminals
  - For 2 conductors each
  - Wire or strand (with or without wire end sleeve)
  - Wire diameter: 0.5 - 2.5 mm²
  - Button for releasing plug-in connection
- Text-oriented user guidance in display
  - Preset date and time
  - fully operable without mains connection
- 84 memory locations
- Interface for OBELISK top2 memory card (PC programming)
  - 2. insertable switching program
  - Copying programs
  - Storing programs
- 10 year power reserve (lithium battery)
- Zero-cross switching for relay-saving switching and high lamp loads
- ON-OFF switching times
- Pulse program
- Cycle program
- Switching preselection
- Permanent switching ON/OFF
- Timer countdown
- Integrated operating hour counter
  - Reset option
  - Service function for monitoring maintenance intervals
- Holiday program
- 2 random programs
- Display back light (can be turned off)
- Permanent switching ON/OFF
- PIN coding
- Automatic summer/winter time changeover
  - can be deactivated
  - Date rule options are already stored for Europe, the USA and other countries
  - own date rule options or changeover around set dates are available

Technical data

Operating voltage	230 V AC
Frequency	50 – 60 Hz
Width	2 modules
Installation type	DIN rail
Type of contact	Changeover contact
Switching output	Phase-independent

Opening width	< 3 mm
Program	Weekly program
Program functions	ON-OFF, Pulse, Cycle
Number of channels	2
External inputs	1
Number of memory locations	84
Power reserve	10 years
Switching capacity at 250 V AC, cos φ = 1	16 A
Switching capacity at 250 V AC, cos φ = 0,6	10 A
Incandescent/halogen lamp load 230 V	2600 W
Energy saving lamps 230 V	1100 W
LED lamp < 2 W	50 W
LED lamp 2-8 W	600 W
LED lamp > 8 W	600 W
Switching capacity min.	ca. 10 mA
Shortest switching times	1 s
Time accuracy at 25 °C	typical ± 0,25 s/day (quartz)
Time basis	Quartz
Stand-by consumption	~0,4 W
Memory card supplied	–
Type of connection	DuoFix spring terminals
Externe Antenne anschließbar	–
Keyboards	4 touch buttons
Housing and insulation material	High-temperature resistant, self-extinguishing thermoplastic
Type of protection	IP 20
Protection class	II according to EN 60 730-1
Ambient temperature	-30 °C … +55 °C

Connection example

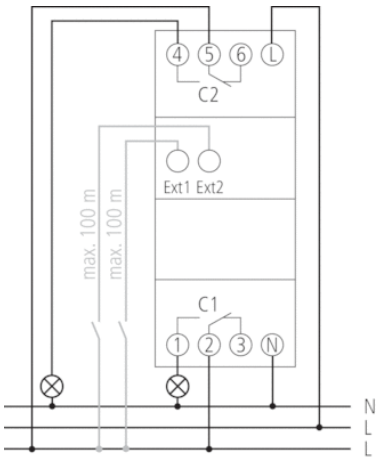

Scale drawings

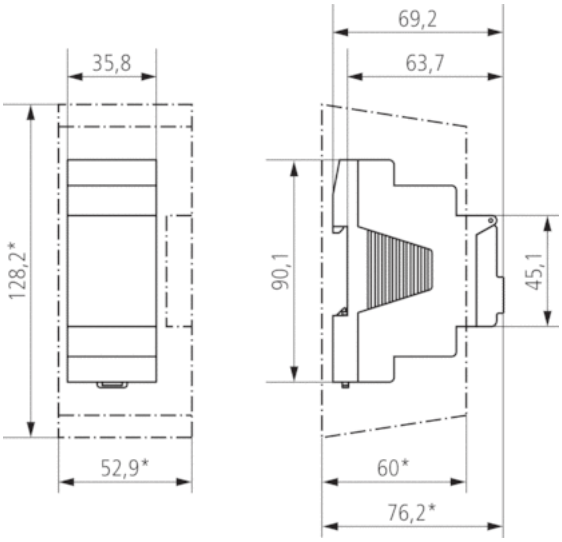

Accessories

Bluetooth OBELISK top3

- Article number: 9070130
  Details ▸ www.theben.de



Wall mounting kit 35 mm

- Article number: 9070064
  Details ▸ www.theben.de



PC set OBELISK top2/3

- Article number: 9070409
  Details ▸ www.theben.de



Memory card OBELISK top2

- Article number: 9070404
  Details ▸ www.theben.de



Front panel kit

- Article number: 9070001
  Details ▸ www.theben.de

