PNOZ mml2p

Configurable Control System PNOZmulti

Operating Manual – No. 1002234-EN-03

This document is a translation of the original document.

All rights to this documentation are reserved by Pilz GmbH & Co. KG. Copies may be made for internal purposes.

Suggestions and comments for improving this documentation will be gratefully received.

Pilz®, PIT®, PMI®, PNOZ®, Primo®, PSEN®, PSS®, PVIS®, SafetyBUS p®, SafetyEYE®, SafetyNET p®, the spirit of safety® are registered and protected trademarks of Pilz GmbH & Co. KG in some countries.

SD means Secure Digital.

Contents

Contents			Page
Chapter 1	**Introduction**		
	1.1	Validity of documentation	1-1
	1.1.1	Retaining the documentation	1-1
	1.2	Overview of documentation	1-2
	1.3	Definition of symbols	1-3
Chapter 2	**Overview**		
	2.1	Unit structure	2-1
	2.1.1	Scope of supply	2-1
	2.1.2	Unit features	2-1
	2.2	Front view	2-2
Chapter 3	**Safety**		
	3.1	Intended use	3-1
	3.2	System requirements	3-2
	3.3	Safety regulations	3-3
	3.3.1	Use of qualified personnel	3-3
	3.3.2	Warranty and liability	3-3
	3.3.3	Disposal	3-3
	3.3.4	For your safety	3-4
Chapter 4	**Function description**		
	4.1	Device properties	4-1
	4.1.1	Integrated protection mechanisms	4-1
	4.1.2	Function description	4-1
	4.1.2.1	Operation	4-1
	4.1.2.2	Block diagram	4-2
Chapter 5	**Installation**		
	5.1	General installation guidelines	5-1
	5.1.1	Dimensions	5-1
	5.2	Connecting the base unit and expansion modules	5-2
Chapter 6	**Commissioning**		
	6.1	General wiring guidelines	6-1
	6.1.1	Insulation voltage test	6-1
	6.2	Preparing for operation	6-2
	6.2.1	Download modified project to the PNOZmulti safety system	6-2
	6.2.2	Connection	6-2
	6.3	Series connection of 4 decentralised modules	6-3

	6.4	Voltage drop	6-4
	6.4.1	Guidelines for various cable types	6-4
	6.4.2	Calculation example	6-5
Chapter 7	**Operation**		
	7.1	Messages	7-1
	7.2	Display elements	7-2
	7.2.1	Display elements for device diagnostics	7-2
	7.3	Fault detection	7-3
Chapter 8	**Technical Details**		
	8.1	Technical Details	8-1
	8.2	Order reference	8-3

Pilz GmbH & Co. KG, Felix-Wankel-Straße 2, 73760 Ostfildern, Germany
Telephone: +49 711 3409-0, Telefax: +49 711 3409-133, E-Mail: pilz.gmbh@pilz.de

1.1 Validity of documentation

This documentation is valid for the product **PNOZ mml2p**. It is valid until new documentation is published.

This operating manual explains the function and operation, describes the installation and provides guidelines on how to connect the product .

1.1.1 Retaining the documentation

This documentation is intended for instruction and should be retained for future reference.

1.2 Overview of documentation

1 Introduction

The introduction is designed to familiarise you with the contents, structure and specific order of this manual.

2 Overview

This chapter provides information on the product's most important features.

3 Safety

This chapter must be read as it contains important information on intended use.

4 Function Description

This chapter describes the product's mode of operation.

5 Installation

This chapter explains how to install the product.

6 Commissioning

This chapter describes the product's commissioning and wiring.

7 Operation

This chapter describes how to operate the product and gives tips in the case of a fault.

8 Technical Details

This chapter contains the product's technical details and order reference.

Pilz GmbH & Co. KG, Felix-Wankel-Straße 2, 73760 Ostfildern, Germany
Telephone: +49 711 3409-0, Telefax: +49 711 3409-133, E-Mail: pilz.gmbh@pilz.de

1.3 Definition of symbols

Information that is particularly important is identified as follows:



DANGER!
This warning must be heeded! It warns of a hazardous situation that poses an immediate threat of serious injury and death and indicates preventive measures that can be taken.



WARNING!
This warning must be heeded! It warns of a hazardous situation that could lead to serious injury and death and indicates preventive measures that can be taken.



CAUTION!
This refers to a hazard that can lead to a less serious or minor injury plus material damage, and also provides information on preventive measures that can be taken.



NOTICE
This describes a situation in which the unit(s) could be damaged and also provides information on preventive measures that can be taken. It also highlights areas within the text that are of particular importance.



INFORMATION
This gives advice on applications and provides information on special features.

1 Introduction

Pilz GmbH & Co. KG, Felix-Wankel-Straße 2, 73760 Ostfildern, Germany
Telephone: +49 711 3409-0, Telefax: +49 711 3409-133, E-Mail: pilz.gmbh@pilz.de

2.1 Unit structure

2.1.1 Scope of supply

- Expansion module**PNOZ mml2p**
- Jumper 779 260

2.1.2 Unit features

Using the product **PNOZ mml2p**:

Link module to safely connect decentralised input/output modules to a configurable control system PNOZmulti Mini.

The product has the following features:

- Can be configured in the PNOZmulti Configurator
- Max. 4 PNOZ mml2p can be connected to the base unit
- Max. 4 decentralised modules can be connected to the link module PNOZ mml2p
- LEDs for
  - Operating state
  - Error
  - Connection status
- Plug-in connection terminals:
  either spring-loaded terminal or screw terminal available as an accessory (see order reference)

2.2 Front view

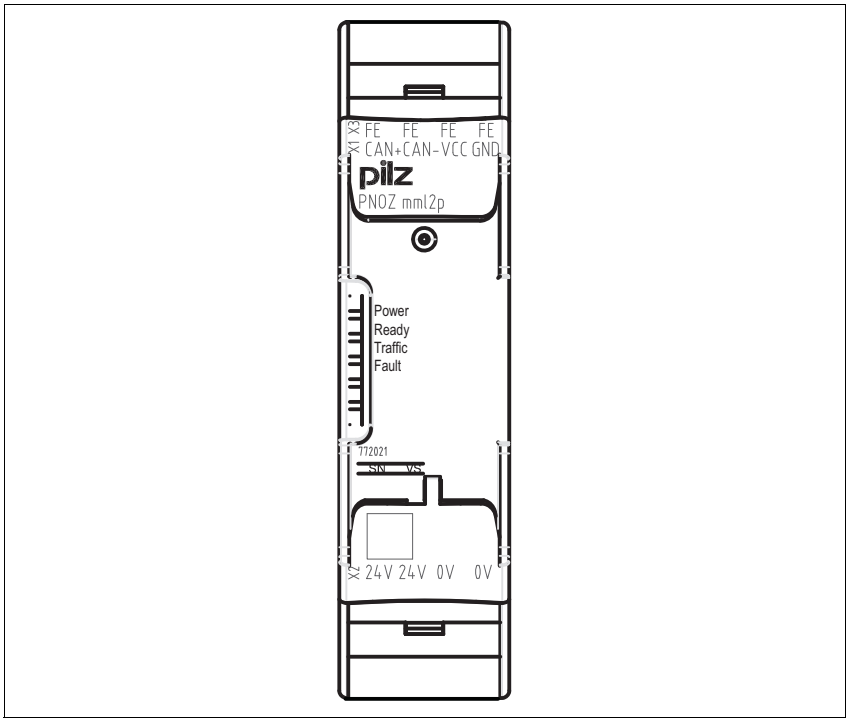

Key:

- 0 V, 24 V:
  Supply connections
- CAN+, CAN-, VCC, GND:
  Connection for decentralised modules
- FE:
  Functional earth

Pilz GmbH & Co. KG, Felix-Wankel-Straße 2, 73760 Ostfildern, Germany
Telephone: +49 711 3409-0, Telefax: +49 711 3409-133, E-Mail: pilz.gmbh@pilz.de

3.1 Intended use

The expansion module is used to connect decentralised input/output modules to a safety system PNOZmulti.

The expansion module may only be connected to a base unit PNOZmulti Mini from the configurable control system PNOZmulti.

The configurable control system PNOZmulti is used for the safety-related interruption of safety circuits and is designed for use in:

- E-STOP equipment
- Safety circuits in accordance with VDE 0113 Part 1 and EN 60204-1

Intended use includes making the electrical installation EMC-compliant. The product is designed for use in an industrial environment. It is not suitable for use in a domestic environment, as this can lead to interference.

The following is deemed improper use in particular:

- Any component, technical or electrical modification to the product
- Use of the product outside the areas described in this manual
- Use of the product outside the technical details (see chapter entitled “Technical Details”)

3.2 System requirements

Please refer to the "Product Modifications" document in the "Version overview" section for details of which versions of the base unit and PNOZmulti Configurator can be used for this product.

Pilz GmbH & Co. KG, Felix-Wankel-Straße 2, 73760 Ostfildern, Germany
Telephone: +49 711 3409-0, Telefax: +49 711 3409-133, E-Mail: pilz.gmbh@pilz.de

3.3 Safety regulations

3.3.1 Use of qualified personnel

The products may only be assembled, installed, programmed, commissioned, operated, maintained and decommissioned by competent persons.

A competent person is someone who, because of their training, experience and current professional activity, has the specialist knowledge required to test, assess and operate the work equipment, devices, systems, plant and machinery in accordance with the general standards and guidelines for safety technology.

It is the company's responsibility only to employ personnel who:

- Are familiar with the basic regulations concerning health and safety / accident prevention
- Have read and understood the safety guidelines given in this description
- Have a good knowledge of the generic and specialist standards applicable to the specific application.

3.3.2 Warranty and liability

All claims to warranty and liability will be rendered invalid if:

- The product was used contrary to the purpose for which it is intended
- Damage can be attributed to not having followed the guidelines in the manual
- Operating personnel are not suitably qualified
- Any type of modification has been made (e.g. exchanging components on the PCB boards, soldering work etc.).

3.3.3 Disposal

- In safety-related applications, please comply with the mission time t_M in the safety-related characteristic data.
- When decommissioning, please comply with local regulations regarding the disposal of electronic devices (e.g. Electrical and Electronic Equipment Act).

3.3 Safety regulations

3.3.4 For your safety

The unit meets all necessary conditions for safe operation. However, you should always ensure that the following safety requirements are met:

- This operating manual only describes the basic functions of the unit. Information on the advanced functions can be found in the online help for the PNOZmulti Configurator and in the PNOZmulti technical catalogue. Only use these functions after you have read and understood the documentation. All necessary documentation can be found on the PNOZmulti Configurator CD.
- Do not open the housing or make any unauthorised modifications.
- Please make sure you shut down the supply voltage when performing maintenance work (e.g. exchanging contactors).

Pilz GmbH & Co. KG, Felix-Wankel-Straße 2, 73760 Ostfildern, Germany
Telephone: +49 711 3409-0, Telefax: +49 711 3409-133, E-Mail: pilz.gmbh@pilz.de

4.1 Device properties

4.1.1 Integrated protection mechanisms

The relay conforms to the following safety criteria:
- The circuit is redundant with built-in self-monitoring.
- The safety function remains effective in the case of a component failure.

4.1.2 Function description

4.1.2.1 Operation

The link module **PNOZ mml2p** is used to safely transfer the input information from decentralised modules to the safety system PNOZmulti.

The function of the inputs and outputs on the control system depends on the safety circuit created using the PNOZmulti Configurator. A chip card is used to download the safety circuit to the base unit. The base unit has 2 microcontrollers that monitor each other. They evaluate the input circuits on the base unit and expansion modules and switch the outputs on the base unit and expansion modules accordingly.

The LEDs on the base unit and expansion modules indicate the status of the configurable control system PNOZmulti.

The online help on the PNOZmulti Configurator contains descriptions of the operating modes and all the functions of the PNOZmulti control system, plus connection examples.

Data exchange:
- Communication with the decentralised modules is via a safe data link.
- The link module **PNOZ mml2p** reads the input information from the decentralised modules as part of each cycle and then forwards it to the base unit.
- At the end of a PNOZmulti cycle, the base unit sends its output data to its link module. This output data is immediately sent to the decentralised modules.

4.1 Device properties

Linking several decentralised modules:

- A maximum of 4 link modules can be connected to a base unit PNOZmulti Mini.
- A maximum of 4 decentralised modules can be connected to a link module **PNOZ mml2p**.
- If a decentralised module receives data intended for a different decentralised module that is connected, the data is forwarded without being processed.

4.1.2.2 Block diagram

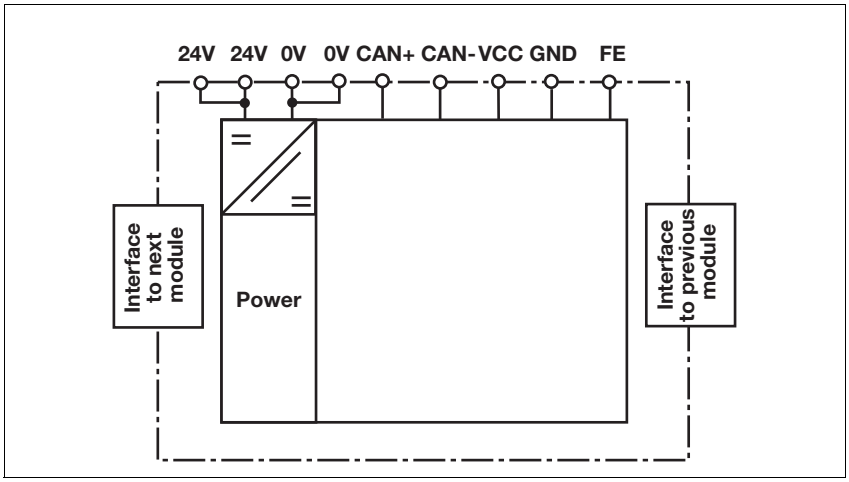

Pilz GmbH & Co. KG, Felix-Wankel-Straße 2, 73760 Ostfildern, Germany
Telephone: +49 711 3409-0, Telefax: +49 711 3409-133, E-Mail: pilz.gmbh@pilz.de

5.1 General installation guidelines

- The unit should be installed in a control cabinet with a protection type of at least IP54.
- Fit the safety system to a horizontal mounting rail. The venting slots must face upwards and downwards. Other mounting positions could destroy the safety system.
- Use the notch on the rear of the unit to attach it to a mounting rail.
- In environments exposed to heavy vibration, the unit should be secured using a fixing element (e.g. retaining bracket or end angle).
- Push the unit upwards or downwards before lifting it from the mounting rail.
- To comply with EMC requirements, the mounting rail must have a low impedance connection to the control cabinet housing.
- The ambient temperature of the PNOZmulti units in the control cabinet must not exceed the figure stated in the technical details, otherwise air conditioning will be required.

CAUTION!
Damage due to electrostatic discharge!
Electrostatic discharge can damage components. Ensure against discharge before touching the product, e.g. by touching an earthed, conductive surface or by wearing an earthed armband.

5.1.1 Dimensions

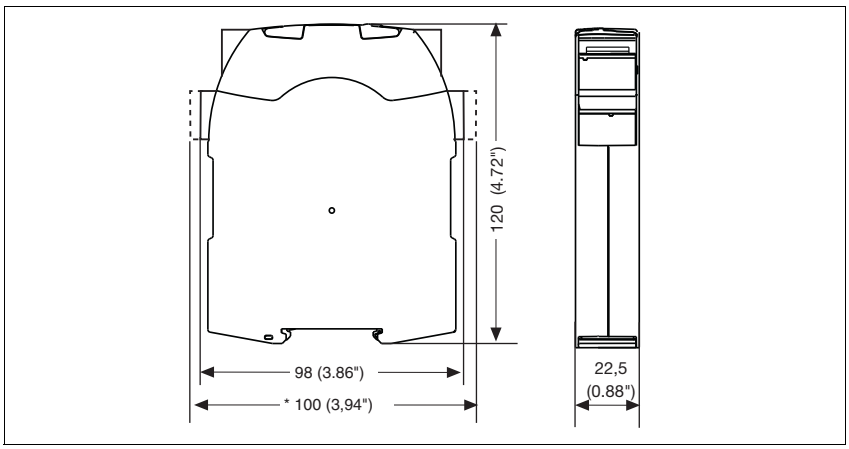

5.2 Connecting the base unit and expansion modules

You can install a maximum of 4 **PNOZ mml2p** to the left of the base unit.

Connect the base unit and the expansion module as described in the operating instructions for the base units.

- Connect the terminator to the expansion module.
- Install the expansion module in the position in which it is configured in the PNOZmulti Configurator.

Pilz GmbH & Co. KG, Felix-Wankel-Straße 2, 73760 Ostfildern, Germany
Telephone: +49 711 3409-0, Telefax: +49 711 3409-133, E-Mail: pilz.gmbh@pilz.de

6.1 General wiring guidelines

The wiring is defined in the circuit diagram of the PNOZmulti Configurator.

Note:

- Information given in the "Technical details" must be followed.
- External measures must be used to connect the FE terminal to the function earth (e.g. mounting rail).
- The power supply must meet the regulations for extra low voltages with safe separation.
- 2 connection terminals are available for each of the supply connections 24 V and 0 V. This means that the supply voltage can be looped through several connections. The current at each terminal may not exceed 3 A.
- Please refer to the technical details for information on the maximum cable length. Please also read the section entitled "Voltage drop".
- Shielded cable must be used from a cable length of **30 m**.
- Pilz pre-assembled cable can be used to connect the decentralised modules (see order reference).
- The plug-in connection terminals are either designed as cage clamp terminals or screw terminals (see order reference).

CAUTION!
Only connect and disconnect the expansion module when the supply voltage is switched off.

6.1.1 Insulation voltage test

The product **PNOZ mml2p** is connected to functional earth ⏚ via protection elements on the supply voltage. Insulation voltage tests are only possible with voltages up to ca. 42 V.

6.2 Preparing for operation

6.2.1 Download modified project to the PNOZmulti safety system

As soon as an additional expansion module has been connected to the system, the project must be amended using the PNOZmulti Configurator. Proceed as described in the operating instructions for the base unit.

NOTICE
For the commissioning and after every program change, you must check whether the safety devices are functioning correctly.

6.2.2 Connection

- Supply voltage

Supply voltage	AC	DC
		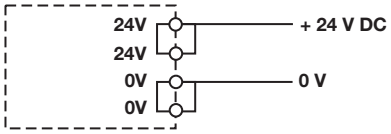

- Connection to a decentralised input module PDP67

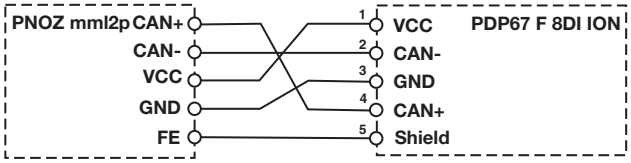

- Connection when using the PSS SB BUSCABLE LC in conjunction with a Pilz self-assembly "PSS67 M12 connector" (see order reference in the Technical Catalogue)

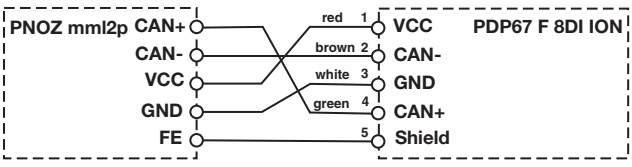

Pilz GmbH & Co. KG, Felix-Wankel-Straße 2, 73760 Ostfildern, Germany
Telephone: +49 711 3409-0, Telefax: +49 711 3409-133, E-Mail: pilz.gmbh@pilz.de

6.3 Series connection of 4 decentralised modules

You can connect up to 4 decentralised modules in series to a PNOZmulti link module.

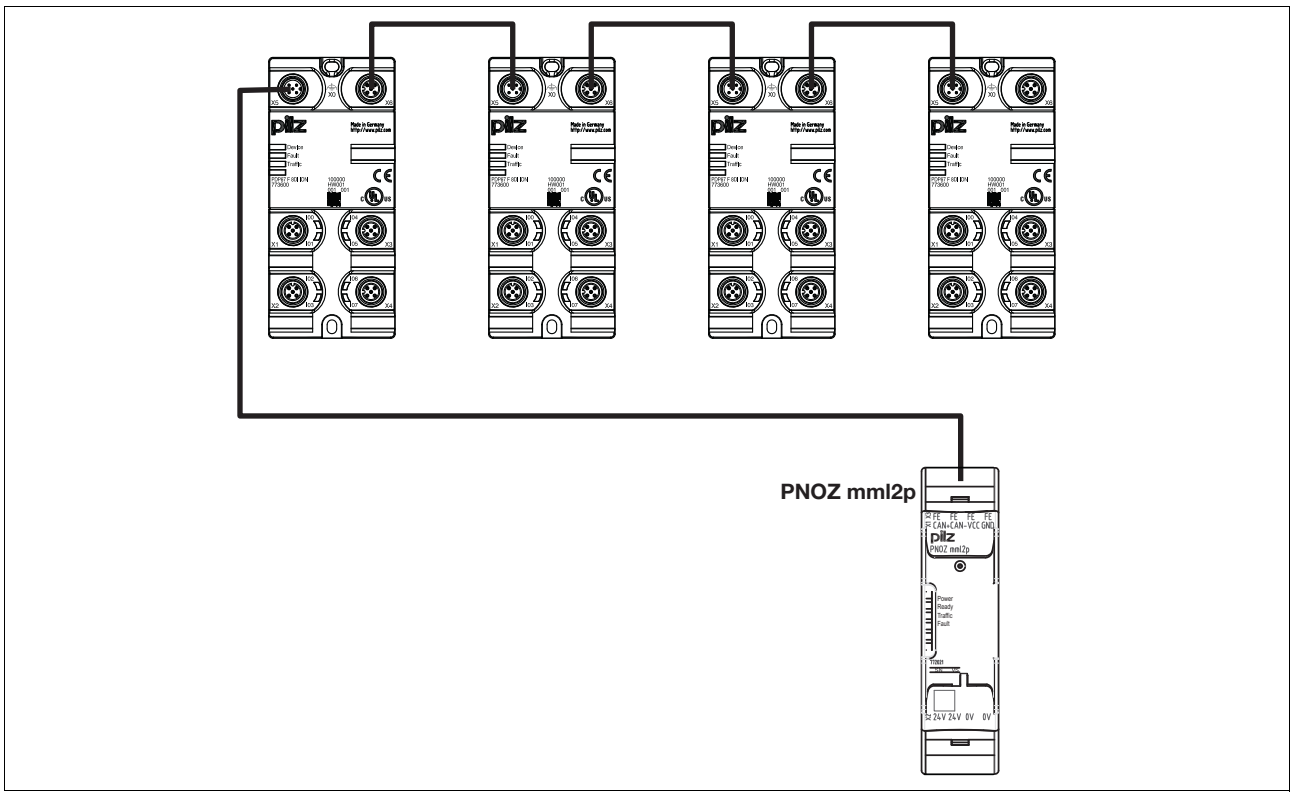

6.4 Voltage drop

The max. cable length depends on the voltage drop in the supply voltage cables. The level of voltage drop is determined by the:

- Cable resistance on the supply voltage cables
- Operating current of the modules
- Load on the modules

To increase the max. cable length, the input voltage can be permanently increased by the voltage tolerance (see Technical Details).

6.4.1 Guidelines for various cable types

Guidelines for calculating the voltage drop on various cable types

Cable type	Voltage drop per 10 m and per 100 mA
PSS SB BUSCABLE LC	0.1 V
Sensor cable 0.25 mm^2	0.15 V
Sensor cable 0.34 mm^2	0.11 V
Sensor cable 0.5 mm^2	0.07 V

Pilz GmbH & Co. KG, Felix-Wankel-Straße 2, 73760 Ostfildern, Germany
Telephone: +49 711 3409-0, Telefax: +49 711 3409-133, E-Mail: pilz.gmbh@pilz.de

6.4 Voltage drop

6.4.2 Calculation example

- The PSS SB BUSCABLE LC is used in accordance with the pin assignment in section 6.2.2.
  Voltage drop per 10 m and per 100 mA: 0.1 V

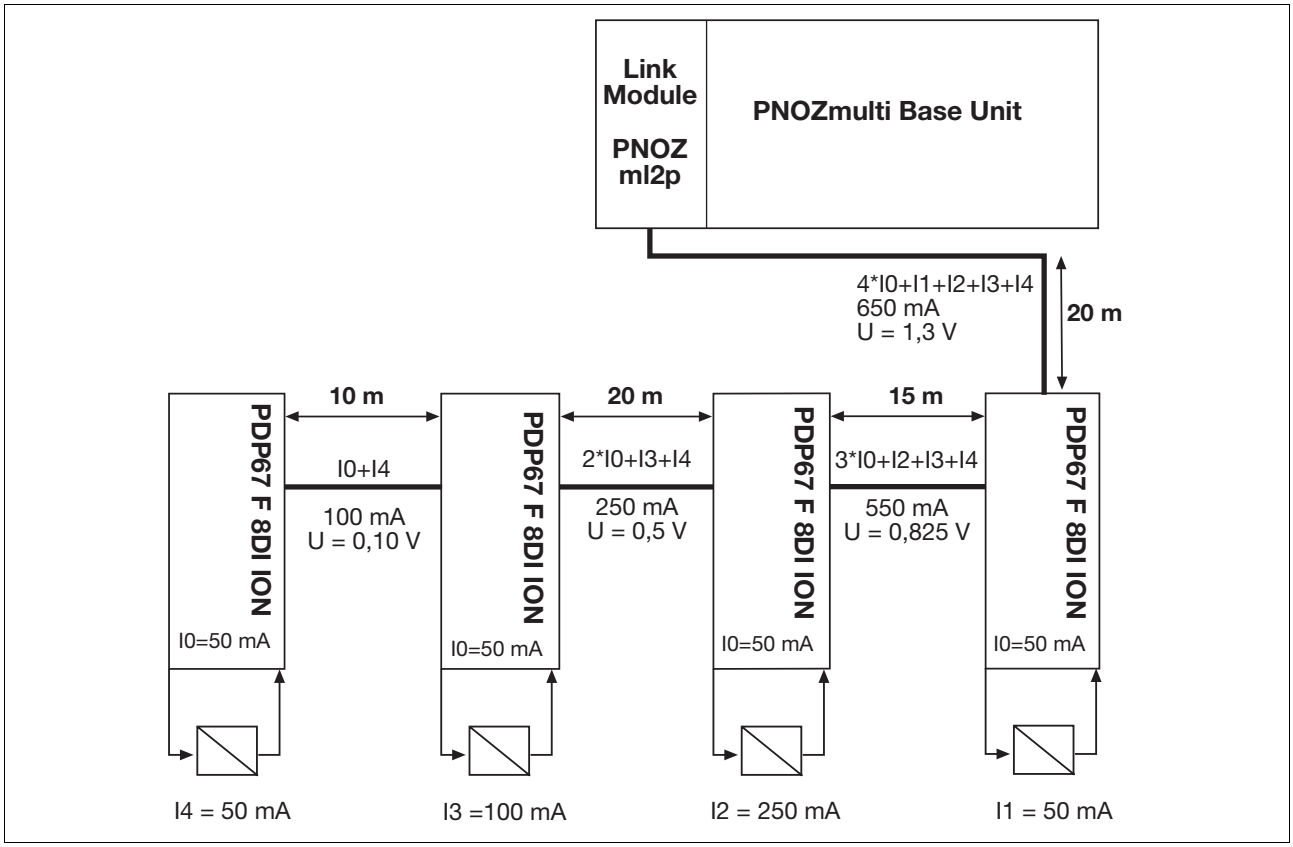

Key:
- I0: Module's consumption.
- I1 ... I5: Load current taken from the module
- U1 … U4: Voltage drop on the respective connection path

Total voltage drop from the link module **PNOZ mml2p** to the final PDP67 F 8DI ION:

$U_{total} = U_1 + U_2 + U_3 + U_4$

$U_{total} = 1.3\ V + 0.825\ V + 0.5\ V + 0.10\ V = 2.725\ V$

Pilz GmbH & Co. KG, Felix-Wankel-Straße 2, 73760 Ostfildern, Germany
Telephone: +49 711 3409-0, Telefax: +49 711 3409-133, E-Mail: pilz.gmbh@pilz.de

7.1 Messages

When the supply voltage is switched on, the PNOZmulti safety system copies the configuration from the chip card.

The LEDs "POWER","DIAG", "FAULT", "IFAULT" and "OFAULT" light up on the base unit.

The PNOZmulti safety system is ready for operation when the "POWER" and "RUN" LEDs on the base unit and the "READY" LED on the **PNOZ mml2p** are lit continuously.

7.2 Display elements

Legend:

☼	LED on
◐	LED flashes
●	LED off

7.2.1 Display elements for device diagnostics

LED	LED status		Meaning
Power	●		No supply voltage
	☼	Green	Supply voltage is present
Ready	☼	Green	The unit is ready for operation
	●		The unit is not ready for operation
Fault	☼	Red	External error
	◐	Red	Internal error
	●		No fault
Traffic	☼	Yellow	Connection to a decentralised module available
	◐	Yellow	Connection is not available to all decentralised modules.
	●		No connection to a decentralised module

Pilz GmbH & Co. KG, Felix-Wankel-Straße 2, 73760 Ostfildern, Germany
Telephone: +49 711 3409-0, Telefax: +49 711 3409-133, E-Mail: pilz.gmbh@pilz.de

7.3 Fault detection

The base unit contains information about the

- Link module (in order, defective, no supply voltage)
- Status of communication with the decentralised modules (data valid, data invalid)

If the connection to a decentralised module is interrupted or there is a major error on the decentralised module, the inputs on the devices connected to the link module are set to zero. The base unit remains in a RUN condition.

Pilz GmbH & Co. KG, Felix-Wankel-Straße 2, 73760 Ostfildern, Germany
Telephone: +49 711 3409-0, Telefax: +49 711 3409-133, E-Mail: pilz.gmbh@pilz.de

8.1 Technical Details

Technical details	
Electrical data	
Supply voltage U_B DC	**24 V**
Voltage tolerance	**-15 %/+20 %**
Power consumption at U_B DC	
without load	**5.0 W**
Residual ripple DC	**5 %**
Status display	**LED**
Times	
Switch-on delay	**5.00 s**
Supply interruption before de-energisation	**20 ms**
Outputs	
Maximum output current decentralised module supply	**4 A**
Short-circuit protection of the decentralised module supply	**ja**
Environmental data	
EMC	**EN 61131-2**
Vibration to **EN 60068-2-6**	
Frequency	**10 - 150 Hz**
Max. acceleration	**1g**
Climatic suitability	**EN 60068-2-14**, **EN 60068-2-1**, **EN 60068-2-2**, **EN 60068-2-30**, **EN 60068-2-78**
Ambient temperature	**0 - 60 °C**
Storage temperature	**-25 - 70 °C**
Mechanical data	
Protection type	
Mounting (e.g. cabinet)	**IP54**
Housing	**IP20**
Terminals	**IP20**
DIN rail	
Top hat rail	**35 x 7.5 EN 50022**
Recess width	**27 mm**
Maximum cable run unscreened	**30 m**
Maximum cable run screened	**100 m**
Housing material	
Housing	**PC**
Front	**PC**
Cross section of external conductors with screw terminals	
1 core flexible	**0.25 - 2.50 mm² , 24 - 12 AWG**
2 core, same cross section, flexible:	
without crimp connectors or with TWIN crimp connectors	**0.20 - 1.50 mm² , 24 - 16 AWG**
Torque setting with screw terminals	**0.50 Nm**
Cross section of external conductors with spring-loaded terminals: Flexible with/without crimp connectors	**0.20 - 2.50 mm² , 24 - 12 AWG**
Spring-loaded terminals: Terminal points per connection	**2**
Stripping length	**9 mm**
Dimensions	
Height	**100.0 mm**
Width	**22.5 mm**
Depth	**120.0 mm**
Weight	**100 g**

8.1 Technical Details

Safety characteristic data						
Unit	**Operating mode**	**EN ISO 13849-1: 2006 PL**	**EN 954-1 Category**	**EN IEC 62061 SIL CL**	**PFH [1/h]**	**EN ISO 13849-1: 2006 T_M [year]**
		PL e (Cat. 4)	**Cat. 4**	**SIL CL 3**	**5.35E-09**	**20**

All the units used within a safety function must be considered when calculating the safety characteristic data.

The standards current on **2011-01** apply.

Pilz GmbH & Co. KG, Felix-Wankel-Straße 2, 73760 Ostfildern, Germany
Telephone: +49 711 3409-0, Telefax: +49 711 3409-133, E-Mail: pilz.gmbh@pilz.de

8.2 Order reference

Order reference

Product type	Features	Order no.
PNOZ mml2p	Link module	772 021

Order reference: Accessories

Product type	Features	Order no.
Spring terminals PNOZ mml2p 1 pc.	Spring-loaded terminals, 1 piece	783 540
Spring terminals PNOZ mml2p 10 pcs.	Spring-loaded terminals, 10 pieces	783 541
Screw terminals PNOZ mml2p 1 pc.	Screw terminals, 1 piece	793 540
Screw terminals PNOZ mml2p 10 pcs.	Screw terminals, 10 pieces	793 541

Order reference: Terminator, jumper

Product type	Features	Order no.
PNOZ mm0.xp connector left	Jumper, 10 pieces	779 260

Order reference: Cable

Product type	Features	Order no.
PSS SB BUSCABLE LC	Cable, shielded, 1 - 100 m	311074
PSS67 I/O Cable	Cable, 1 - 30 m	380 320
PSS67 Cable M8sf M12sm	Cable, straight M12 connector, straight M8 socket, 4-pin, 3m	380 200
PSS67 Cable M8sf M12sm	Cable, straight M12 connector, straight M8 socket, 4-pin, 5 m	380 201
PSS67 Cable M8sf M12sm	Cable, straight M12 connector, straight M8 socket, 4-pin, 10 m	380 202
PSS67 Cable M8sf M12sm	Cable, straight M12 connector, straight M8 socket, 4-pin, 30 m	380 203
PSS67 Cable M8af M12sm	Cable, straight M12 connector, angled M8 socket, 4-pin, 3m	380 204
PSS67 Cable M8af M12sm	Cable, straight M12 connector, angled M8 socket, 4-pin, 5 m	380 205
PSS67 Cable M8af M12sm	Cable, straight M12 connector, angled M8 socket, 4-pin, 10 m	380 206
PSS67 Cable M8af M12sm	Cable, straight M12 connector, angled M8 socket, 4-pin, 30 m	380 207
PSS67 Cable M12sf M12sm	Cable, straight M12 connector, straight M12 socket, 5-pin, 3m	380 208
PSS67 Cable M12sf M12sm	Cable, straight M12 connector, straight M12 socket, 5-pin, 5 m	380 209
PSS67 Cable M12sf M12sm	Cable, straight M12 connector, straight M12 socket, 5-pin, 10 m	380 210
PSS67 Cable M12sf M12sm	Cable, straight M12 connector, straight M12 socket, 5-pin, 30 m	380 211
PSS67 Cable M12af M12am	Cable, angled M12 connector, angled M12 socket, 5-pin, 3m	380 212
PSS67 Cable M12af M12am	Cable, angled M12 connector, angled M12 socket, 5-pin, 5 m	380 213
PSS67 Cable M12af M12am	Cable, angled M12 connector, angled M12 socket, 5-pin, 10 m	380 214
PSS67 Cable M12af M12am	Cable, angled M12 connector, angled M12 socket, 5-pin, 30 m	380 215

8.2 Order reference

Order reference: Adapters

Product type	Features	Order no.
PSEN ma adapter	Adapter for connection to safety switch PSENmag	380 300
PSEN cs adapter	Adapter for connection to safety switch PSENcode	380 301

Order reference: Connectors

Product type	Features	Order no.
PSS67 M12 connector	Connector, M12, straight, 5-pin, A-coded	380 308
PSS67 M12 connector	Socket, M12, straight, 5-pin, A-coded	380 309
PSS67 M12 connector	Connector, M12, angled, 5-pin, A-coded	380 310
PSS67 M12 connector	Socket, M12, angled, 5-pin, A-coded	380 311
PSS67 M8 connector	Connector, M8, straight, 4-pin	380 316
PSS67 M8 connector	Socket, M8, straight, 4-pin	380 317
PSS67 M8 connector	Connector, M8, angled, 4-pin	380 318
PSS67 M8 connector	Socket, M8, angled, 4-pin	380 319

Pilz GmbH & Co. KG, Felix-Wankel-Straße 2, 73760 Ostfildern, Germany
Telephone: +49 711 3409-0, Telefax: +49 711 3409-133, E-Mail: pilz.gmbh@pilz.de

1002234-EN-03, 2011-10 Printed in Germany
© Pilz GmbH & Co. KG, 2011

InduraNET p®, Pilz®, PIT®, PMCprotego®, PMI®, PNOZ®, Primo®, PSEN®, PSS®, PVIS®, SafetyBUS p®, SafetyEYE®, SafetyNET p®, the spirit of safety® are registered and protected trademarks of Pilz GmbH & Co. KG in some countries. We would point out that product features may vary from the details stated in this document, depending on the status at the time of publication and the scope of the equipment. We accept no responsibility for the validity, accuracy and entirety of the text and graphics presented in this information. Please contact our Technical Support if you have any questions.

...
In many countries we are represented by our subsidiaries and sales partners.

Please refer to our homepage for further details or contact our headquarters.

Technical support
+49 711 3409-444
support@pilz.com

Pilz GmbH & Co. KG
Felix-Wankel-Straße 2
73760 Ostfildern, Germany
Telephone: +49 711 3409-0
Telefax: +49 711 3409-133
E-Mail: pilz.gmbh@pilz.de
Internet: www.pilz.com