# Product datasheet
## Characteristics

# XCRT115EX
## limit switch XCR - roller lever - 2 C/O - ATEX/ IECEx



## Main

| | |
|---|---|
| Range of product | OsiSense ATEX D |
| Series name | Special format |
| Product or component type | Limit switch |
| Product specific application | For conveyor belt shift monitoring |
| Device short name | XCR |
| Body type | Fixed |
| Head type | Rotary head |
| Material | Metal |
| Fixing mode | By the body |
| Movement of operating head | Rotary |
| Type of operator | Spring return roller zinc plated steel with lever |
| Switch actuation | By conveyor belt |
| Type of approach | Lateral approach, 2 directions |
| Electrical connection | Screw-clamp terminals, clamping capacity: 1 x 0.5...2 x 2.5 mm² |
| Cable entry number | 1 tapped entry for Pg 13.5 cable gland (included) 9…12 mm |
| Number of poles | 2 |
| Contacts type and composition | 2 x 1 C/O |
| Contacts insulation form | Za |
| Contact operation | Snap action |
| Number of steps | 2 |
| Contact block per direction [control circuit] | 1 per direction |
| Positive opening | With |
| Minimum torque for tripping | 1 N.m |
| Maximum actuation speed | 1.5 m/s |
| IP degree of protection | IP65 conforming to IEC 60529 |

Disclaimer: This documentation is not intended as a substitute for and is not to be used for determining suitability or reliability of these products for specific user applications

## Complementary

| | |
|---|---|
| Body material | Zinc alloy |
| Minimum actuation speed | 0.01 m/min |
| Tripping angle | 10 ° for fault signalling<br>18 ° for stopping of the conveyor belt |
| Maximum displacement angle | -90 °<br>90 ° |
| Contact code designation | A300, AC-15 (Ue = 240 V), Ie = 3 A conforming to EN 60947-5-1<br>A300, AC-15 (Ue = 240 V), Ie = 3 A conforming to IEC 60947-5-1 appendix A<br>Q300, DC-13 (Ue = 250 V), Ie = 0.27 A conforming to EN 60947-5-1<br>Q300, DC-13 (Ue = 250 V), Ie = 0.27 A conforming to IEC 60947-5-1 appendix A |
| [Ui] rated insulation voltage | 300 V conforming to UL 508<br>500 V conforming to NF C 20-040 group C<br>500 V (pollution degree 3) conforming to IEC 60947-1<br>500 V (pollution degree 3) conforming to VDE 0110 |
| Maximum resistance across terminals | 25 MOhm conforming to IEC 60255-7 category 3<br>25 MOhm conforming to NF C 93-050 method A |
| [Uimp] rated impulse withstand voltage | 6 kV IEC 60664<br>6 kV IEC 60947-1 |
| Short-circuit protection | 10 A cartridge fuse, type gG |
| Electrical durability | 5000000 cycles, DC-13, inductive load type, 120 V, 4 W, operating rate <3600 cyc/mn, load factor: 0.5, DC conforming to IEC 60947-5-1 appendix C<br>5000000 cycles, DC-13, inductive load type, 24 V, 10 W, operating rate <3600 cyc/mn, load factor: 0.5, DC conforming to IEC 60947-5-1 appendix C<br>5000000 cycles, DC-13, inductive load type, 48 V, 7 W, operating rate <3600 cyc/mn, load factor: 0.5, DC conforming to IEC 60947-5-1 appendix C |
| Mechanical durability | 300000 cycles |
| Marking | II2 D-Ex tb IIIC T85°C Db IP66/67 |
| Width | 85 mm |
| Height | 95 mm |
| Depth | 75 mm |

## Environment

| | |
|---|---|
| Shock resistance | 30 gn for 18 ms conforming to IEC 60068-2-27 |
| Vibration resistance | 9 gn (f= 10…500 Hz) conforming to IEC 60068-2-6 |
| Electrical shock protection class | Class I conforming to IEC 60536<br>Class I conforming to NF C 20-030 |
| Ambient air temperature for operation | -20…60 °C |
| Protective treatment | TC |
| Dust zone | Zone 21 - 22 |
| Product certifications | INERIS 04ATEX0014X<br>IEC-Ex INE 16.0048X |
| Standards | EN/IEC 60079-31<br>EN/IEC 60079-0 |
| Directives | 2014/34/EU - ATEX directive |

## Packing Units

| | |
|---|---|
| Package 1 Weight | 1.294 kg |

## Offer Sustainability

| | |
|---|---|
| Sustainable offer status | Green Premium product |
| REACh Regulation | REACh Declaration |
| EU RoHS Directive | Pro-active compliance (Product out of EU RoHS legal scope)<br>EU RoHS Declaration |
| Mercury free | Yes |
| RoHS exemption information | Yes |

| | |
|---|---|
| Environmental Disclosure | Product Environmental Profile |

## Contractual warranty

| | |
|---|---|
| Warranty | 18 months |

# XCRT115EX

## Dimensions

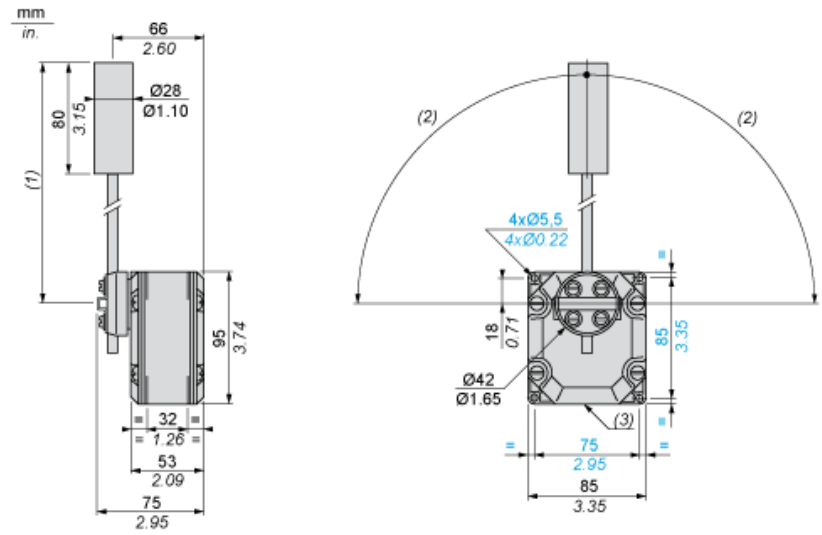


(1) 200 mm max. 104 mm min.
(2) 90° max.
(3) 1 tapped entry for Pg 13.5 cable gland

## Wiring Diagram

### 2 Single-pole CO Snap Action

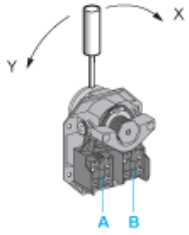


(A) 1st contact
(B) 2nd contact

### 2 Single-pole CO Snap Action

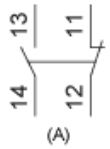


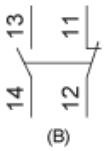


(A) 1st contact
(B) 2nd contact

## Functionnal Diagram

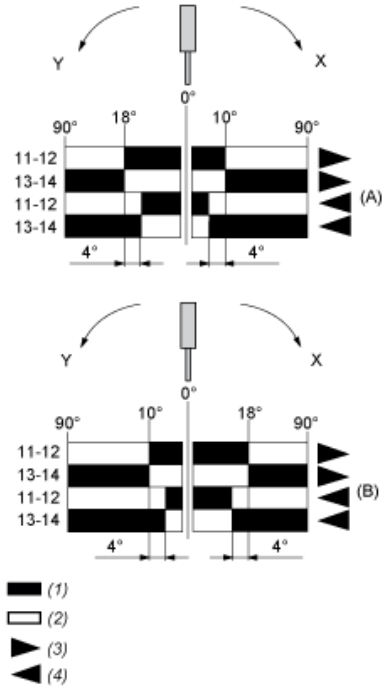


(A) 1st contact
(B) 2nd contact
(1) Closed
(2) Open
(3) Tripping
(4) Resetting