

HeliCoil® plus

HELICOIL® plus repairing of damaged threads

BÖLLHOFF

Contents

	Page
Applications for thread repair with HELICOIL® plus	3
HELICOIL® plus thread technology	4
Installation of HELICOIL® plus thread inserts	5
Product range of HELICOIL® plus repair kits and repair range kits	6
Repair kits with metric thread inserts	7 – 10
Repair kits with metric thread inserts for special applications (oil drain, spark plug and Lambda probe threads)	11 – 12
Repair range kits with metric thread inserts	13 – 14
Repair kits with imperial thread inserts	15 – 21
Repair range kits with imperial thread inserts	22 – 24
Replacement installation and removal tools (metric)	24 – 34
HELICOIL® plus design quidelines for thread technology	35
HELICOIL® plus threads metric installation data	36
HELICOIL® plus threads imperial installation data	37
HELICOIL® plus TWINSERT thread inserts for metals	38 – 39

Applications for thread repair with **HELICOIL® plus**

Repairing of damaged spark plug threads

In the automotive industry the HELICOIL® plus thread technology is widely used to provide high strength threads.

Thanks to efficient repair of damaged threads, valuable components do not have to be replaced.

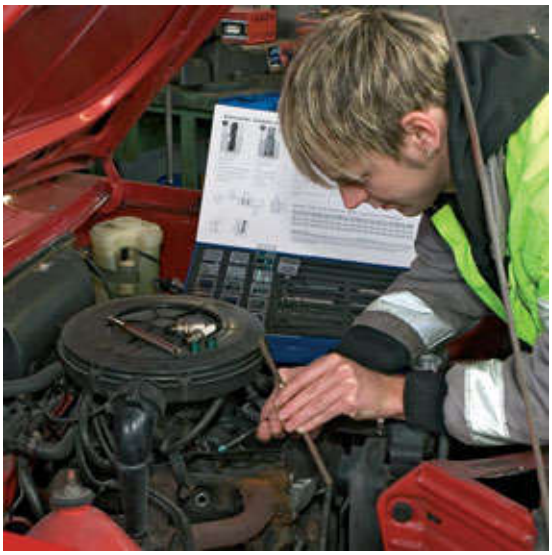

Thread repair for aluminium engines

With HELICOIL® plus thread inserts, cost-intensive replacements of threads in aluminium engines, such as employed in motor sports, are no longer necessary. Preventive installation of HELICOIL® plus ensures minimum effort for thread repair during engine life.



Thread repair in different industry sectors

Common applications relying on threads are employed in the machine and plant construction, power plant engineering and shipbuilding. Scrap reclamation: High volume production parts with damaged threads can be reworked.

Thread repair involves multiple standards.
HELICOIL® plus thread inserts comply with certifications for numerous industries, e. g. approved by:

- Technical Inspection Authority (TÜV)
- Germanischer Lloyd
- DET Norske Veritas

In the field of nuclear energy an individual inspection is being conducted.



HELICOIL® plus *Thread Technology*

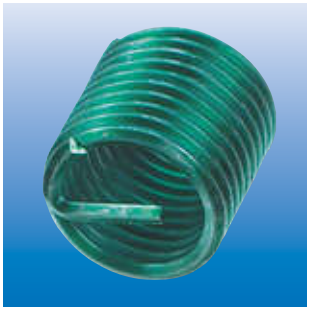

- Thread inserts ensure heavy-duty connection capability, especially in low-strength materials like aluminium and magnesium. For over fifty years, they have been used in practice and proven reliable.
- HELICOIL® thread repair is used in metals as well as in many plastic and composite materials.
- Thread inserts are made from well-proven and tested quality stainless steel (A2) and are formed from rhomboidally profiled wire into a resilient spiral.
- HELICOIL® plus thread inserts comply with multiple requirements and standards for general industry and aerospace industry such as DIN 8140, DIN 65536, EN 2944, LN 9039 and LN 9490. On request, we give you further standards the threads comply with.
- Scrap reclamation: High volume production parts with damaged threads can be reworked.

HELICOIL® plus – *the solution for threads damaged by wear of overtorque*

Your advantages

- Permanent high strength and wear resistant
- Corrosion and temperature resistant
- Easy and quick mounting
- HELICOIL® plus – the original



Damaged thread



Repaired thread

How to install HELICOIL® plus

- HELICOIL® plus thread inserts are screwed in just like a common screw. The tool sleeve with leader catridge, that was required in the past, is no longer needed.
  All that is needed for screwing-in is an installation mandrel the size of a screw tap.
- The mandrel can be compared to a screw tap energised by a die wrench or other common tools from nut bodies with ratchet wrench. For particularly low-height thread repairs, the mandrel can be extended.
  The HELICOIL® plus thread insert is screwed in until the nose meets the tang. Thus, the thread also works in vertical installations. It guarantees safe repairing of threads.
- To determine the right depth of insertion, the last spiral wire has to be situated under the first flank of the thread.
- Since HELICOIL® plus threads are installed without a leader cartridge, the depth of insertion can be visually checked. Thus, it is not necessary to use a depth control stop as it is for tools using leader cartridges.
  For easier identification in the fitted position, HELICOIL® plus threads are green-coloured.
- After installation the tang is broken off at the notch (pre-set break-off point).
- The new HELICOIL® plus technology allows repairing threads, that up until now could only be repaired using special tools.

Installation of **HELICOIL® plus** *thread inserts*

Drilling the core hole
Please take note of the recommended diameters for drilling the core hole $D_{1\ HC}$ from the table on page 36/37. Please note, that information about the twist drill B are only values for orientation. For counter-boring (burring) the core hole outer diameter of the couterbore: D_{HC} + 0.1 mm



HELICOIL® plus holding thread
Please only use the special HELICOIL® plus screw tap. For checking the holding thread, we can send you plug limit gauge.



HELICOIL® plus installation without leader cartridge
Arrange manual tap: ■ **hole in centre** ■ **vertical**

M 2 – M 16
and M 18 – M 24 (only normal pitch)
UNC 2-56 to
UNC 1/2"-13
UNF 4-48 to
UNF 1/2"-20





≥ UNC 5/8"-11





HELICOIL® plus installation with leader cartridge

Exception HELICOIL® plus for fine threads
≥ M 18 x 1.5
UNC 9/16"-12
≥ UNF 9/16"-18
≥ G 1/8"-28
≥ BSW 3/16"-24
≥ BSF 1/4"-26





Right hub
HELICOIL® plus thread insert is to be installed at least 1/4 thread below the work piece top surface and seated in a fully cut thread.

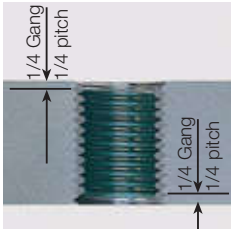

Break tang
Please remove the tang from the thread using the tang break-off tool. The tang of threads ≥ M 14 should be broken off with long-nosed pliers by axial raising and lowering.





Information about the range of HELICOIL® plus lengths on page 35.

Product range **HELICOIL® plus** *repair kits and repair range kits*





Repair kits with HELICOIL® plus metric thread inserts

- M 2 – M 16 x 1.5
  (available in three lengths per size, each 20 or 10 HELICOIL® plus thread inserts)
- M 18 – M 36 x 1.5
  (with 10 HELICOIL® plus thread inserts in one length)





- Oil drain threads M 12 x 1.5, M 14 x 1.5 and M 16 x 1.5
  (available in three lengths per size, each 10 HELICOIL® plus thread inserts)
- Spark plug threads M 10 x 1, M 12 x 1.25 and M 14 x 1.25
  (available in three lengths per size, each 10 HELICOIL® plus thread inserts)
- Lambda probe threads M 18 x 1.5
  (with 5 HELICOIL® plus thread inserts in one length)





Repair range kits of HELICOIL® plus metric thread inserts

Six different ranges:

- M 2.5 – M 6
- M 4 – M 10
- M 5 – M 12
- M 6 – M 14 x 1.25
- Range of spark plug threads M 10 x 1 – M 14 x 1.25
- Range of oil drain threads M 12 x 1.5, M 14 x 1.5, M 16 x 1.5





Repair kits of HELICOIL® plus imperial thread inserts

- UNC 2-56 to UNC 1 1/2"-6
- UNF 4-48 to UNF 1"-12
- BSW 3/16"-24 to BSW 1 1/2"-6
- BSF 1/4"-26 to BSF 1"-10
- G 1/8"-28 to G 1"-11





Repair range kits of HELICOIL® plus respectively HELICOIL® imperial thread inserts

Five different ranges:

- UNC (UNC 5-40 to UNC 12-24 and UNC 1/4"-20 to UNC 1/2"-13)
- UNF (UNF 4-48 to UNF 1/4"-28 and UNF 1/4"-28 to UNF 1/2"-20)
- BSW (BSW 1/4"-20 to BSW 1/2"-12)

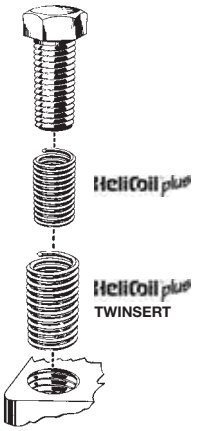

Repair kits HELICOIL® plus TWINSERT from M 2.5 to M 16

The HELICOIL® plus TWINSERT uses two HELICOIL® plus inserts, one installed inside the other. Faults requiring the repair kit HELICOIL® TWINSERT are thread bores which require correction, stripped and oversized or off-centered threads which cannot be corrected using a larger bolt diameter.

HELICOIL® plus *repair kits with metric thread inserts*



M 2 – M 16 x 1.5
ISO metric threads, stainless steel A2

Contents:
HELICOIL® plus thread inserts in three sizes
Twist drill (up to M 12)
HELICOIL® hand tap HSS
HELICOIL® plus installation mandrel
Tang break-off tool (up to M 12)

Thread size d (x P)	Pitch P	Order no. **Repair kit**	Number of HELICOIL® Inserts	**Repair kit** €	Thread size **Refill pack** d (x P) x L	Order no. **Refill pack**	Number of HELICOIL® Inserts	**Refill pack** €
			20 x M 2 x 2		M 2 x 2	4189 002 0002	20	on request
M 2	0.4	4185 102 0000	20 x M 2 x 3	on request	M 2 x 3	4189 002 0003	20	on request
			20 x M 2 x 4		M 2 x 4	4189 002 0004	20	on request
			20 x M 2.5 x 2.5		M 2.5 x 2.5	4189 025 0025	20	on request
M 2.5	0.45	4185 125 0000	20 x M 2.5 x 3.75	on request	M 2.5 x 3.75	4189 025 0375	20	on request
			20 x M 2.5 x 5		M 2.5 x 5.0	4189 025 0005	20	on request
			20 x M 3 x 3		M 3 x 3	4189 003 0003	20	on request
M 3	0.5	4185 103 0000	20 x M 3 x 4.5	on request	M 3 x 4.5	4189 003 0045	20	on request
			20 x M 3 x 6		M 3 x 6	4189 003 0006	20	on request
			20 x M 3.5 x 3.5		M 3.5 x 3.5	4189 035 0035	20	on request
M 3.5	0.6	4185 135 0000	20 x M 3.5 x 5.25	on request	M 3.5 x 5.25	4189 035 0053	20	on request
			20 x M 3.5 x 7		M 3.5 x 7	4189 035 0007	20	on request
			20 x M 4 x 4		M 4 x 4	4189 004 0004	20	on request
M 4	0.7	4185 104 0000	20 x M 4 x 6	on request	M 4 x 6	4189 004 0006	20	on request
			20 x M 4 x 8		M 4 x 8	4189 004 0008	20	on request
			20 x M 5 x 5		M 5 x 5	4189 005 0005	20	on request
M 5	0.8	4185 105 0000	20 x M 5 x 7.5	on request	M 5 x 7.5	4189 005 0075	20	on request
			20 x M 5 x 10		M 5 x 10	4189 005 0010	20	on request
			20 x M 6 x 6		M 6 x 6	4189 006 0006	20	on request
M 6	1.0	4185 106 0000	20 x M 6 x 9	on request	M 6 x 9	4189 006 0009	20	on request
			20 x M 6 x 12		M 6 x 12	4189 006 0012	20	on request
			10 x M 7 x 7		M 7 x 7	4189 007 0007	10	on request
M 7	1.0	4185 107 0000	10 x M 7 x 10.5	on request	M 7 x 10.5	4189 007 0105	10	on request
			10 x M 7 x 14		M 7 x 14	4189 007 0014	10	on request
			10 x M 8 x 8		M 8 x 8	4189 008 0008	10	on request
M 8	1.25	4185 108 0000	10 x M 8 x 12	on request	M 8 x 12	4189 008 0012	10	on request
			10 x M 8 x 16		M 8 x 16	4189 008 0016	10	on request
			10 x M 8 x 1 x 8		M 8 x 1 x 8	4189 008 3008	10	on request
M 8 x 1	1.0	4185 108 3000	10 x M 8 x 1 x 12	on request	M 8 x 1 x 12	4189 008 3012	10	on request
			10 x M 8 x 1 x 16		M 8 x 1 x 16	4189 008 3016	10	on request
			10 x M 9 x 9		M 9 x 9	4189 009 0009	10	on request
M 9	1.25	4185 109 0000	10 x M 9 x 13.5	on request	M 9 x 13.5	4189 009 0135	10	on request
			10 x M 9 x 18		M 9 x 18	4189 009 0018	10	on request
			10 x M 10 x 10		M 10 x 10	4189 010 0010	10	on request
M 10	1.5	4185 110 0000	10 x M 10 x 15	on request	M 10 x 15	4189 010 0015	10	on request
			10 x M 10 x 20		M 10 x 20	4189 010 0020	10	on request
			10 x M 10 x 1 x 10		M 10 x 1 x 10	4189 010 3010	10	on request
M 10 x 1	1.0	4185 110 3000	10 x M 10 x 1 x 15	on request	M 10 x 1 x 15	4189 010 3015	10	on request
			10 x M 10 x 1 x 20		M 10 x 1 x 20	4189 010 3020	10	on request
			10 x M 10 x 1.25 x 10		M 10 x 1.25 x 10	4189 010 9010	10	on request
M 10 x 1.25	1.25	4185 110 9000	10 x M 10 x 1.25 x 15	on request	M 10 x 1.25 x 15	4189 010 9015	10	on request
			10 x M 10 x 1.25 x 20		M 10 x 1.25 x 20	4189 010 9020	10	on request

HELICOIL® plus *repair kits with metric thread inserts*

Thread size d (x P)	Pitch P	Order no. **Repair kit**	Number of HELICOIL® Inserts	**Repair kit** €	Thread size **Refill pack** d (x P) x L	Order no. **Refill pack**	Number of HELICOIL® Inserts	**Refill pack** €
			10 x M 11 x 11		M 11 x 11	4189 011 0011	10	on request
M 11	1.5	4185 111 0000	10 x M 11 x 16.5	on request	M 11 x 16.5	4189 011 0165	10	on request
			10 x M 11 x 22		M 11 x 22	4189 011 0022	10	on request
			10 x M 12 x 12		M 12 x 12	4189 012 0012	10	on request
M 12	1.75	4185 112 0000	10 x M 12 x 18	on request	M 12 x 18	4189 012 0018	10	on request
			10 x M 12 x 24		M 12 x 24	4189 012 0024	10	on request
			10 x M 12 x 1.25 x 12		M 12 x 1.25 x 12	4189 012 9012	10	on request
M 12 x 1.25	1.25	4185 112 9000	10 x M 12 x 1.25 x 18	on request	M 12 x 1.25 x 18	4189 012 9018	10	on request
			10 x M 12 x 1.25 x 24		M 12 x 1.25 x 24	4189 012 9024	10	on request
			10 x M 12 x 1.5 x 12		M 12 x 1.5 x 12	4189 012 4012	10	on request
M 12 x 1.5	1.5	4185 112 4000	10 x M 12 x 1.5 x 18	on request	M 12 x 1.5 x 18	4189 012 4018	10	on request
			10 x M 12 x 1.5 x 24		M 12 x 1.5 x 24	4189 012 4024	10	on request
			10 x M 14 x 14		M 14 x 14	4189 014 0014	10	on request
M 14	2.0	4185 114 0000	10 x M 14 x 21	on request	M 14 x 21	4189 014 0021	10	on request
			10 x M 14 x 28		M 14 x 28	4189 014 0028	10	on request
			10 x M 14 x 1.5 x 14		M 14 x 1.5 x 14	4189 014 4014	10	on request
M 14 x 1.5	1.5	4185 114 4000	10 x M 14 x 1.5 x 21	on request	M 14 x 1.5 x 21	4189 014 4021	10	on request
			10 x M 14 x 1.5 x 28		M 14 x 1.5 x 28	4189 014 4028	10	on request
			10 x M 16 x 16		M 16 x 16	4189 016 0016	10	on request
M 16	2.0	4185 116 0000	10 x M 16 x 24	on request	M 16 x 24	4189 016 0024	10	on request
			10 x M 16 x 32		M 16 x 32	4189 016 0032	10	on request
			10 x M 16 x 1.5 x 16		M 16 x 1.5 x 16	4189 016 4016	10	on request
M 16 x 1.5	1.5	4185 116 4000	10 x M 16 x 1.5 x 24	on request	M 16 x 1.5 x 24	4189 016 4024	10	on request
			10 x M 16 x 1.5 x 32		M 16 x 1.5 x 32	4189 016 4032	10	on request

d = Nominal thread diameter (mm)
P = Thread pitch (mm)
L = Length (mm)

HELICOIL® plus *repair kits with metric thread inserts*



M 18 – M 36 x 1.5
ISO metric threads, stainless steel A2

Contents:
HELICOIL® plus thread inserts
Hand tap (two-parts set consisting of pre and final cutter)
HELICOIL® plus installation mandrel (M 18 – M 24 normal pitch)
HELICOIL® manual inserting tool (M 27 – M 33 normal pitch
and M 18 x 1.5 – M 36 x 1.5 threads fine pitch)

Thread size d (x P) x L	Pitch P	Order no. **Repair kit**	Number of HELICOIL® Inserts	**Repair kit** €	Order no. **Refill pack**	Number of HELICOIL® Inserts	**Refill pack** €
M 18 x 18	2.5	4185 118 0018	10	on request	0189 118 0018	10	on request
M 18 x 27	2.5	4185 118 0027	10	on request	0189 118 0027	10	on request
M 18 x 36	2.5	4185 118 0036	10	on request	0189 118 0036	10	on request
M 18 x 1.5 x 18	1.5	4185 118 4018	10	on request	0189 118 4018	10	on request
M 18 x 1.5 x 27	1.5	4185 118 4027	10	on request	0189 118 4027	10	on request
M 18 x 1.5 x 36	1.5	4185 118 4036	10	on request	0189 118 4036	10	on request
M 18 x 2 x 18	2	4185 118 5018	10	on request	0189 118 5018	10	on request
M 18 x 2 x 27	2	4185 118 5027	10	on request	0189 118 5027	10	on request
M 18 x 2 x 36	2	4185 118 5036	10	on request	0189 118 5036	10	on request
M 20 x 20	2.5	4185 120 0020	10	on request	0189 120 0020	10	on request
M 20 x 30	2.5	4185 120 0030	10	on request	0189 120 0030	10	on request
M 20 x 40	2.5	4185 120 0040	10	on request	0189 120 0040	10	on request
M 20 x 1.5 x 20	1.5	4185 120 4020	10	on request	0189 120 4020	10	on request
M 20 x 1.5 x 30	1.5	4185 120 4030	10	on request	0189 120 4030	10	on request
M 20 x 1.5 x 40	1.5	4185 120 4040	10	on request	0189 120 4040	10	on request
M 20 x 2 x 20	2	4185 120 5020	10	on request	0189 120 5020	10	on request
M 20 x 2 x 30	2	4185 120 5030	10	on request	0189 120 5030	10	on request
M 20 x 2 x 40	2	4185 120 5040	10	on request	0189 120 5040	10	on request
M 22 x 22	2.5	4185 122 0022	10	on request	0189 122 0022	10	on request
M 22 x 33	2.5	4185 122 0033	10	on request	0189 122 0033	10	on request
M 22 x 44	2.5	4185 122 0044	10	on request	0189 122 0044	10	on request
M 22 x 1.5 x 22	1.5	4185 122 4022	10	on request	0189 122 4022	10	on request
M 22 x 1.5 x 33	1.5	4185 122 4033	10	on request	0189 122 4033	10	on request
M 22 x 1.5 x 44	1.5	4185 122 4044	10	on request	0189 122 4044	10	on request
M 22 x 2 x 22	2	4185 122 5022	10	on request	0189 122 5022	10	on request
M 22 x 2 x 33	2	4185 122 5033	10	on request	0189 122 5033	10	on request
M 22 x 2 x 44	2	4185 122 5044	10	on request	0189 122 5044	10	on request
M 24 x 24	3	4185 124 0024	10	on request	0189 124 0024	10	on request
M 24 x 36	3	4185 124 0036	10	on request	0189 124 0036	10	on request
M 24 x 48	3	4185 124 0048	10	on request	0189 124 0048	10	on request
M 24 x 1.5 x 24	1.5	4185 124 4024	10	on request	0189 124 4024	10	on request
M 24 x 1.5 x 36	1.5	4185 124 4036	10	on request	0189 124 4036	10	on request
M 24 x 1.5 x 48	1.5	4185 124 4048	10	on request	0189 124 4048	10	on request
M 24 x 2 x 24	2	4185 124 5024	10	on request	0189 124 5024	10	on request
M 24 x 2 x 36	2	4185 124 5036	10	on request	0189 124 5036	10	on request
M 24 x 2 x 48	2	4185 124 5048	10	on request	0189 124 5048	10	on request
M 26 x 1.5 x 26	1.5	4185 126 4026	10	on request	0189 126 4026	10	on request
M 26 x 1.5 x 39	1.5	4185 126 4039	10	on request	0189 126 4039	10	on request
M 26 x 1.5 x 52	1.5	4185 126 4052	10	on request	0189 126 4052	10	on request
M 27 x 27	3	4185 127 0027	10	on request	0189 127 0027	10	on request
M 27 x 40.5	3	4185 127 0405	10	on request	0189 127 0405	10	on request
M 27 x 54	3	4185 127 0054	10	on request	0189 127 0054	10	on request
M 27 x 1.5 x 27	1.5	4185 127 4027	10	on request	0189 127 4027	10	on request
M 27 x 1.5 x 40.5	1.5	4185 127 4405	10	on request	0189 127 4405	10	on request
M 27 x 1.5 x 54	1.5	4185 127 4054	10	on request	0189 127 4054	10	on request

HELICOIL® plus *repair kits with metric thread inserts*

Thread size d (x P) x L	Pitch P	Order no. **Repair kit**	Number of HELICOIL® Inserts	**Repair kit** €	Order no. **Refill pack**	Number of HELICOIL® Inserts	**Refill pack** €
M 27 x 2 x 27	2	4185 127 5027	10	on request	0189 127 5027	10	on request
M 27 x 2 x 40.5	2	4185 127 5405	10	on request	0189 127 5405	10	on request
M 27 x 2 x 54	2	4185 127 5054	10	on request	0189 127 5054	10	on request
M 28 x 1.5 x 28	1.5	4185 128 4028	10	on request	0189 128 4028	10	on request
M 28 x 1.5 x 42	1.5	4185 128 4042	10	on request	0189 128 4042	10	on request
M 28 x 1.5 x 56	1.5	4185 128 4056	10	on request	0189 128 4056	10	on request
M 30 x 30	3.5	4185 130 0030	10	on request	0189 130 0030	10	on request
M 30 x 45	3.5	4185 130 0045	10	on request	0189 130 0045	10	on request
M 30 x 60	3.5	4185 130 0060	10	on request	0189 130 0060	10	on request
M 30 x 1.5 x 30	1.5	4185 130 4030	10	on request	0189 130 4030	10	on request
M 30 x 1.5 x 45	1.5	4185 130 4045	10	on request	0189 130 4045	10	on request
M 30 x 1.5 x 60	1.5	4185 130 4060	10	on request	0189 130 4060	10	on request
M 30 x 2 x 30	2	4185 130 5030	10	on request	0189 130 5030	10	on request
M 30 x 2 x 45	2	4185 130 5045	10	on request	0189 130 5045	10	on request
M 30 x 2 x 60	2	4185 130 5060	10	on request	0189 130 5060	10	on request
M 32 x 1.5 x 32	1.5	4185 132 4032	10	on request	0189 132 4032	10	on request
M 32 x 1.5 x 48	1.5	4185 132 4048	10	on request	0189 132 4048	10	on request
M 32 x 1.5 x 64	1.5	4185 132 4064	10	on request	0189 132 4064	10	on request
M 33 x 33	3.5	4185 133 0033	10	on request	0189 133 0033	10	on request
M 33 x 49.5	3.5	4185 133 0495	10	on request	0189 133 0495	10	on request
M 33 x 66	3.5	4185 133 0066	10	on request	0189 133 0066	10	on request
M 33 x 1.5 x 33	1.5	4185 133 4033	10	on request	0189 133 4033	10	on request
M 33 x 1.5 x 49.5	1.5	4185 133 4495	10	on request	0189 133 4495	10	on request
M 33 x 1.5 x 66	1.5	4185 133 4066	10	on request	0189 133 4066	10	on request
M 33 x 2 x 33	2	4185 133 5033	10	on request	0189 133 5033	10	on request
M 33 x 2 x 49.5	2	4185 133 5495	10	on request	0189 133 5495	10	on request
M 33 x 2 x 66	2	4185 133 5066	10	on request	0189 133 5066	10	on request
M 35 x 1.5 x 35	1.5	4185 135 4035	10	on request	0189 135 4035	10	on request
M 35 x 1.5 x 52.5	1.5	4185 135 4525	10	on request	0189 135 4525	10	on request
M 35 x 1.5 x 70	1.5	4185 135 4070	10	on request	0189 135 4070	10	on request
M 36 x 1.5 x 36	1.5	4185 136 4036	10	on request	0189 136 4036	10	on request
M 36 x 1.5 x 54	1.5	4185 136 4054	10	on request	0189 136 4054	10	on request
M 36 x 1.5 x 72	1.5	4185 136 4072	10	on request	0189 136 4072	10	on request

d = Nominal thread diameter (mm)
P = Thread pitch (mm)
L = Length (mm)

HELICOIL® plus *repair kits with metric thread inserts for special applications*



M 12 x 1.5 – M 16 x 1.5 (oil drain threads)
ISO metric threads, stainless steel A2

Contents:
HELICOIL® plus threaded inserts in three lengths
Combined drilling and tapping tool
HELICOIL® hand tap (for obstructions)
HELICOIL® plus installation mandrel, tang break-off tool, slide gauge

Thread size d x P	Pitch P	Order no. **Repair kit***	HELICOIL® Inserts 10 x each	Number of turns W	**Repair kit** €
M 12 x 1.5	1.5	4185 112 4200	M 12 x 1.5 x 9	4.4	on request
			M 12 x 1.5 x 12	6.2	
			M 12 x 1.5 x 18	9.8	
M 14 x 1.5	1.5	4185 114 4200	M 14 x 1.5 x 10.5	5.4	on request
			M 14 x 1.5 x 14	7.4	
			M 14 x 1.5 x 21	11.6	
M 16 x 1.5	1.5	4185 116 4200	M 16 x 1.5 x 12	6.3	on request
			M 16 x 1.5 x 16	8.7	
			M 16 x 1.5 x 24	13.4	

* For refill packs see repair range kit on page 14.

Thread repair for damaged oil drain threads



After tapping the HELICOIL® plus thread, you have to use the slide gauge to find out how many turns the HELICOIL® plus thread insert needs. In the example shown 8.5 turns are needed for a thread size of M 14 x 1.5.



A table (see installation description) is used to select the HELICOIL® plus with the appropriate number of turns “W”. If necessary, the HELICOIL® plus is trimmed to the right number of turns using the edge cutter.



Once the thread has been repaired with the HELICOIL® plus and the tang has been broken off, you will be left with a perfect and heavy duty thread again. There are no edges, which means that the oil can drain away freely.



An adequate sealing ring support is available for standard sealing plugs with collar. The original sealing plug can be used (no sealing plug in oversize or higher dimension).

HELICOIL® plus *repair kits with metric thread inserts for special applications*



M 10 x 1 – M 14 x 1.25 (spark plug threads)
ISO metric threads, stainless steel A2

Contents:
HELICOIL® plus thread inserts
HELICOIL® combined drilling and tapping tool
HELICOIL® plus installation mandrel

Thread size d x P	Pitch P	Order no. **Repair kit**	HELICOIL® Inserts 10 x each	**Repair kit** €	Thread size **Refill pack** d x P x L	Order no. **Refill pack**	Number of HELICOIL® Inserts	**Refill pack** €
			M 10 x 1 x 10		M 10 x 1 x 10	4189 010 3010	10	on request
M 10 x 1	1.0	4185 110 3100	M 10 x 1 x 15	on request	M 10 x 1 x 15	4189 010 3015	10	on request
			M 10 x 1 x 17.5		M 10 x 1 x 17.5	4189 010 3175	10	on request
			M 12 x 1.25 x 12		M 12 x 1.25 x 12	4189 012 9012	10	on request
M 12 x 1.25	1.25	4185 112 9100	M 12 x 1.25 x 16	on request	M 12 x 1.25 x 16	4189 012 9016	10	on request
			M 12 x 1.25 x 24		M 12 x 1.25 x 24	4189 012 9024	10	on request
			M 14 x 1.25 x 8.4		M 14 x 1.25 x 8.4	4189 014 9008	10	on request
M 14 x 1.25	1.25	4185 114 9100	M 14 x 1.25 x 12.4	on request	M 14 x 1.25 x 12.4	4189 014 9012	10	on request
			M 14 x 1.25 x 16.4		M 14 x 1.25 x 16.4	4189 014 9016	10	on request



M 18 x 1.5 (Lambda probe threads)
ISO metric threads, made from Inconel X 750, silver plated
for high thermal loads

Contents:
HELICOIL® plus thread inserts
HELICOIL® hand tap HSS
HELICOIL® manual inserting tool
Hexagonal key
Tool adapter for 3/8" rattle

Thread size d x P x L	Pitch P	Order no. **Repair kit**	Number of HELICOIL® Inserts	**Repair kit** €	Order no. **Refill pack**	Number of HELICOIL® Inserts	**Refill pack** €
M 18 x 1.5 x 9	1.5	4185 918 4003	5	on request	4189 918 4001	5	on request

HELICOIL® plus *repair range kits with metric thread inserts*



M 2.5 – M 6
ISO metric threads, stainless steel A2

320 pieces

Contents:
HELICOIL® plus thread inserts
of various types and lengths
Twist drills
HELICOIL® hand tap HSS
HELICOIL® plus installation mandrel
Tang break-off tool

Order no. Repair range kit	Repair range kit €	Thread size Refill pack d x L	Pitch P	Order no. Refill pack	Number of HELICOIL® Inserts	Refill pack €
4186 000 0001	on request	M 2.5 x 2.5	0.45	4189 025 0025	20	on request
		M 2.5 x 3.75	0.45	4189 025 0375	20	on request
		M 2.5 x 5.0	0.45	4189 025 0005	20	on request
		M 3 x 3	0.50	4189 003 0003	20	on request
		M 3 x 4.5	0.50	4189 003 0045	20	on request
		M 3 x 6	0.50	4189 003 0006	20	on request
		M 4 x 4	0.70	4189 004 0004	20	on request
		M 4 x 6	0.70	4189 004 0006	20	on request
		M 4 x 8	0.70	4189 004 0008	20	on request
		M 5 x 5	0.80	4189 005 0005	20	on request
		M 5 x 7.5	0.80	4189 005 0075	20	on request
		M 5 x 10	0.80	4189 005 0010	20	on request
		M 6 x 6	1.00	4189 006 0006	20	on request
		M 6 x 9	1.00	4189 006 0009	20	on request
		M 6 x 12	1.00	4189 006 0012	20	on request

M 4 – M 10
ISO metric threads, stainless steel A2

260 pieces

Contents:
HELICOIL® plus thread inserts
of various types and lengths
Twist drills
HELICOIL® hand tap HSS
HELICOIL® plus installation mandrel
Tang break-off tool

4186 101 0001	on request	M 4 x 4	0.70	4189 004 0004	20	on request
		M 4 x 6	0.70	4189 004 0006	20	on request
		M 4 x 8	0.70	4189 004 0008	20	on request
		M 5 x 5	0.80	4189 005 0005	20	on request
		M 5 x 7.5	0.80	4189 005 0075	20	on request
		M 5 x 10	0.80	4189 005 0010	20	on request
		M 6 x 6	1.00	4189 006 0006	20	on request
		M 6 x 9	1.00	4189 006 0009	20	on request
		M 6 x 12	1.00	4189 006 0012	20	on request
		M 8 x 8	1.25	4189 008 0008	10	on request
		M 8 x 12	1.25	4189 008 0012	10	on request
		M 8 x 16	1.25	4189 008 0016	10	on request
		M 10 x 10	1.50	4189 010 0010	10	on request
		M 10 x 15	1.50	4189 010 0015	10	on request
		M 10 x 20	1.50	4189 010 0020	10	on request

M 5 – M 12
ISO metric threads, stainless steel A2

230 pieces

Contents:
HELICOIL® plus thread inserts
of various types and lengths
Twist drills
HELICOIL® hand tap HSS
HELICOIL® plus installation mandrel
Tang break-off tool

4186 100 0001	on request	M 5 x 5	0.80	4189 005 0005	20	on request
		M 5 x 7.5	0.80	4189 005 0075	20	on request
		M 5 x 10	0.80	4189 005 0010	20	on request
		M 6 x 6	1.00	4189 006 0006	20	on request
		M 6 x 9	1.00	4189 006 0009	20	on request
		M 6 x 12	1.00	4189 006 0012	20	on request
		M 8 x 8	1.25	4189 008 0008	10	on request
		M 8 x 12	1.25	4189 008 0012	10	on request
		M 8 x 16	1.25	4189 008 0016	10	on request
		M 10 x 10	1.50	4189 010 0010	10	on request
		M 10 x 15	1.50	4189 010 0015	10	on request
		M 10 x 20	1.50	4189 010 0020	10	on request
		M 12 x 12	1.75	4189 012 0012	10	on request
		M 12 x 18	1.75	4189 012 0018	10	on request
		M 12 x 24	1.75	4189 012 0024	10	on request

HELICOIL® plus *repair range kits with metric thread inserts*



M 6 – M 14 x 1.25
ISO metric threads, stainless steel A2
+ Spark plug threads, stainless steel A2

Contents:
HELICOIL® plus thread inserts
Twist drills up to M 12 (M 14 x 1.25 with combined drilling and tapping tool)
HELICOIL® hand tap HSS
HELICOIL® plus installation mandrel
Tang break-off tool (up to M 12)

Order no. **Repair range kit**	**Repair range kit** €	Thread size **Refill pack** d (x P) x L	Pitch P	Order no. **Refill pack**	Number of HELICOIL® Inserts	**Refill pack** €
4186 200 0001	on request	M 6 x 6	1.00	4189 006 0006	20	on request
		M 6 x 9	1.00	4189 006 0009	20	on request
		M 6 x 12	1.00	4189 006 0012	20	on request
		M 8 x 8	1.25	4189 008 0008	10	on request
		M 8 x 12	1.25	4189 008 0012	10	on request
		M 8 x 16	1.25	4189 008 0016	10	on request
		M 10 x 10	1.50	4189 010 0010	10	on request
		M 10 x 15	1.50	4189 010 0015	10	on request
		M 10 x 20	1.50	4189 010 0020	10	on request
		M 12 x 12	1.75	4189 012 0012	10	on request
		M 12 x 18	1.75	4189 012 0018	10	on request
		M 12 x 24	1.75	4189 012 0024	10	on request
		M 14 x 1.25 x 8.4	1.25	4189 014 9008	10	on request
		M 14 x 1.25 x 12.4	1.25	4189 014 9012	10	on request
		M 14 x 1.25 x 16.4	1.25	4189 014 9016	10	on request



M 10 x 1 – M 14 x 1.25
Spark plug threads, stainless steel A2

Contents: HELICOIL® plus thread inserts of various types and lengths
HELICOIL® combined drilling and tapping tool
HELICOIL® plus installation mandrel
Tang break-off tool

4186 400 0001	on request	M 10 x 1 x 10	1.00	4189 010 3010	10	on request
		M 10 x 1 x 15	1.00	4189 010 3015	10	on request
		M 10 x 1 x 17.5	1.00	4189 010 3175	10	on request
		M 12 x 1.25 x 12	1.25	4189 012 9012	10	on request
		M 12 x 1.25 x 16	1.25	4189 012 9016	10	on request
		M 12 x 1.25 x 24	1.25	4189 012 9024	10	on request
		M 14 x 1.25 x 8.4	1.25	4189 014 9008	10	on request
		M 14 x 1.25 x 12.4	1.25	4189 014 9012	10	on request
		M 14 x 1.25 x 16.4	1.25	4189 014 9016	10	on request



M 12 x 1.5 – M 16 x 1.5 (oil drain threads)
ISO metric threads, stainless steel A2
Contents: HELICOIL® plus thread inserts of various types and lengths
Combined drilling and tapping tool
HELICOIL® hand tap (for obstructions)
HELICOIL® plus installation mandrel, tang break-off tool, slide gauge

Order no. **Repair range kit**	**Repair range kit** €	Thread size **Refill pack** d x P x L	Number of turns W	Pitch P	Order no. **Refill pack**	Number of HELICOIL® Inserts	**Refill pack** €
4186 700 0001	on request	M 12 x 1.5 x 9	4.4	1.5	4189 012 4009	10	on request
		M 12 x 1.5 x 12	6.2	1.5	4189 012 4012	10	on request
		M 12 x 1.5 x 18	9.8	1.5	4189 012 4018	10	on request
		M 14 x 1.5 x 10.5	5.4	1.5	4189 014 4105	10	on request
		M 14 x 1.5 x 14	7.4	1.5	4189 014 4014	10	on request
		M 14 x 1.5 x 21	11.6	1.5	4189 014 4021	10	on request
		M 16 x 1.5 x 12	6.3	1.5	4189 016 4012	10	on request
		M 16 x 1.5 x 16	8.7	1.5	4189 016 4016	10	on request
		M 16 x 1.5 x 24	13.4	1.5	4189 016 4024	10	on request

HELICOIL® plus *repair kits with imperial thread inserts*



American national coarse threads (UNC/NC)
Stainless steel A2

Contents:
HELICOIL® plus thread inserts in three lengths
Twist drill
HELICOIL® hand tap HSS
HELICOIL® plus installation mandrel
Tang break-off tool

Thread size d - z	Pitch P [mm]	Order no. **Repair kit**	Number of HELICOIL® Inserts x L	**Repair kit** €	Thread size **Refill pack** d - z x L [mm]	Order no. **Refill pack**	Number of HELICOIL® Inserts	**Refill pack** €
			20 x UNC 2-56 x 2.2		UNC 2-56 x 2.2	4189 063 6004	20	on request
UNC 2-56	0.435	4185 163 6000	20 x UNC 2-56 x 3.3	on request	UNC 2-56 x 3.3	4189 063 6006	20	on request
			20 x UNC 2-56 x 4.4		UNC 2-56 x 4.4	4189 063 6006	20	on request
			20 x UNC 4-40 x 2.9		UNC 4-40 x 2.9	4189 065 6004	20	on request
UNC 4-40	0.635	4185 165 6000	20 x UNC 4-40 x 4.3	on request	UNC 4-40 x 4.3	4189 065 6006	20	on request
			20 x UNC 4-40 x 5.8		UNC 4-40 x 5.8	4189 065 6008	20	on request
			20 x UNC 5-40 x 3.2		UNC 5-40 x 3.2	4189 066 6004	20	on request
UNC 5-40	0.635	4185 166 6000	20 x UNC 5-40 x 4.8	on request	UNC 5-40 x 4.8	4189 066 6006	20	on request
			20 x UNC 5-40 x 6.4		UNC 5-40 x 6.4	4189 066 6008	20	on request
			20 x UNC 6-32 x 3.5		UNC 6-32 x 3.5	4189 067 6004	20	on request
UNC 6-32	0.794	4185 167 6000	20 x UNC 6-32 x 5.3	on request	UNC 6-32 x 5.3	4189 067 6006	20	on request
			20 x UNC 6-32 x 7.0		UNC 6-32 x 7.0	4189 067 6008	20	on request
			20 x UNC 8-32 x 4.2		UNC 8-32 x 4.2	4189 068 6004	20	on request
UNC 8-32	0.794	4185 168 6000	20 x UNC 8-32 x 6.3	on request	UNC 8-32 x 6.3	4189 068 6006	20	on request
			20 x UNC 8-32 x 8.3		UNC 8-32 x 8.3	4189 068 6008	20	on request
			20 x UNC 10-24 x 4.8		UNC 10-24 x 4.8	4189 069 6004	20	on request
UNC 10-24	1.058	4185 169 6000	20 x UNC 10-24 x 7.2	on request	UNC 10-24 x 7.2	4189 069 6006	20	on request
			20 x UNC 10-24 x 9.6		UNC 10-24 x 9.6	4189 069 6008	20	on request
			20 x UNC 12-24 x 5.5		UNC 12-24 x 5.5	4189 070 6004	20	on request
UNC 12-24	1.058	4185 170 6000	20 x UNC 12-24 x 8.2	on request	UNC 12-24 x 8.2	4189 070 6006	20	on request
			20 x UNC 12-24 x 11.0		UNC 12-24 x 11.0	4189 070 6008	20	on request
			20 x UNC 1/4"-20 x 6.4		UNC 1/4"-20 x 6.4	4189 074 6004	20	on request
UNC 1/4"-20	1.270	4185 174 6000	20 x UNC 1/4"-20 x 9.5	on request	UNC 1/4"-20 x 9.5	4189 074 6006	20	on request
			20 x UNC 1/4"-20 x 12.7		UNC 1/4"-20 x 12.7	4189 074 6008	20	on request
			10 x UNC 5/16"-18 x 7.9		UNC 5/16"-18 x 7.9	4189 0766 004	10	on request
UNC 5/16"-18	1.411	4185 176 6000	10 x UNC 5/16"-18 x 11.9	on request	UNC 5/16"-18 x 11.9	4189 0766 006	10	on request
			10 x UNC 5/16"-18 x 15.9		UNC 5/16"-18 x 15.9	4189 0766 008	10	on request
			10 x UNC 3/8"-16 x 9.5		UNC 3/8"-16 x 9.5	4189 077 6004	10	on request
UNC 3/8"-16	1.588	4185 177 6000	10 x UNC 3/8"-16 x 14.3	on request	UNC 3/8"-16 x 14.3	4189 077 6006	10	on request
			10 x UNC 3/8"-16 x 19.1		UNC 3/8"-16 x 19.1	4189 077 6008	10	on request
			10 x UNC 7/16"-14 x 11.1		UNC 7/16"-14 x 11.1	4189 078 6004	10	on request
UNC 7/16"-14	1.814	4185 178 6000	10 x UNC 7/16"-14 x 16.7	on request	UNC 7/16"-14 x 16.7	4189 078 6006	10	on request
			10 x UNC 7/16"-14 x 22.2		UNC 7/16"-14 x 22.2	4189 078 6008	10	on request
			10 x UNC 1/2"-13 x 12.7		UNC 1/2"-13 x 12.7	4189 079 6004	10	on request
UNC 1/2"-13	1.954	4185 179 6000	10 x UNC 1/2"-13 x 19.1	on request	UNC 1/2"-13 x 19.1	4189 079 6006	10	on request
			10 x UNC 1/2"-13 x 25.4		UNC 1/2"-13 x 25.4	4189 079 6008	10	on request

d = Thread diameter
z = Number of threads of 1 inch (1 inch ≙ 25.4 mm)
L = Length (mm)
P = Pitch (mm)

HELICOIL® plus *repair kits with imperial thread inserts*



American national coarse threads (UNC/NC)
Stainless steel A2

Contents:
HELICOIL® thread inserts
HELICOIL® two-parts set consisting of pre and final cutter
HELICOIL® manual tap

Thread size d - z	Pitch P [mm]	Order no. **Repair kit**	Number of HELICOIL® Inserts x L [mm]	**Repair kit** €	Order no. **Refill pack**	Number of HELICOIL® Inserts	**Refill pack** €
UNC 9/16"-12	2.117	0185 580 6004	10 x UNC 9/16"-12 x 14.3	on request	0189 180 6004	10	on request
UNC 9/16"-12	2.117	0185 580 6006	10 x UNC 9/16"-18 x 21.5	on request	0189 180 6006	10	on request
UNC 9/16"-12	2.117	0185 580 6008	10 x UNC 9/16"-18 x 28.6	on request	0189 180 6008	10	on request
UNC 5/8"-11	2.309	0185 581 6004	10 x UNC 5/8"-11 x 15.9	on request	0189 181 6004	10	on request
UNC 5/8"-11	2.309	0185 581 6006	10 x UNC 5/8"-11 x 23.8	on request	0189 181 6006	10	on request
UNC 5/8"-11	2.309	0185 581 6008	10 x UNC 5/8"-11 x 31.8	on request	0189 181 6008	10	on request
UNC 3/4"-10	2.540	0185 583 6004	10 x UNC 3/4"-10 x 19.1	on request	0189 183 6004	10	on request
UNC 3/4"-10	2.540	0185 583 6006	10 x UNC 3/4"-10 x 28.6	on request	0189 183 6006	10	on request
UNC 3/4"-10	2.540	0185 583 6008	10 x UNC 3/4"-10 x 38.1	on request	0189 183 6008	10	on request
UNC 7/8"-9	2.822	0185 585 6004	10 x UNC 7/8"-9 x 22.2	on request	0189 185 6004	10	on request
UNC 7/8"-9	2.822	0185 585 6006	10 x UNC 7/8"-9 x 33.3	on request	0189 185 6006	10	on request
UNC 7/8"-9	2.822	0185 585 6008	10 x UNC 7/8"-9 x 44.5	on request	0189 185 6008	10	on request
UNC 1"-8	3.175	0185 586 6004	10 x UNC 1"-8 x 25.4	on request	0189 186 6004	10	on request
UNC 1"-8	3.175	0185 586 6006	10 x UNC 1"-8 x 38.1	on request	0189 186 6006	10	on request
UNC 1"-8	3.175	0185 586 6008	10 x UNC 1"-8 x 50.8	on request	0189 186 6008	10	on request
UNC 1 1/8"-7	3.629	0185 587 6004	10 x UNC 1 1/8"-7 x 28.6	on request	0189 187 6004	10	on request
UNC 1 1/8"-7	3.629	0185 587 6006	10 x UNC 1 1/8"-7 x 42.9	on request	0189 187 6006	10	on request
UNC 1 1/8"-7	3.629	0185 587 6008	10 x UNC 1 1/8"-7 x 57.2	on request	0189 187 6008	10	on request
UNC 1 1/4"-7	3.629	0185 588 6004	10 x UNC 1 1/4"-7 x 31.8	on request	0189 188 6004	10	on request
UNC 1 1/4"-7	3.629	0185 588 6006	10 x UNC 1 1/4"-7 x 47.6	on request	0189 188 6006	10	on request
UNC 1 1/4"-7	3.629	0185 588 6008	10 x UNC 1 1/4"-7 x 63.5	on request	0189 188 6008	10	on request
UNC 1 3/8"-6	4.234	0185 589 6004	10 x UNC 1 3/8"-6 x 34.9	on request	0189 189 6004	10	on request
UNC 1 3/8"-6	4.234	0185 589 6006	10 x UNC 1 3/8"-6 x 52.4	on request	0189 189 6006	10	on request
UNC 1 3/8"-6	4.234	0185 589 6008	10 x UNC 1 3/8"-6 x 69.9	on request	0189 189 6008	10	on request
UNC 1 1/2"-6	4.234	0185 590 6004	10 x UNC 1 1/2"-6 x 38.1	on request	0189 190 6004	10	on request
UNC 1 1/2"-6	4.234	0185 590 6006	10 x UNC 1 1/2"-6 x 57.2	on request	0189 190 6006	10	on request
UNC 1 1/2"-6	4.234	0185 590 6008	10 x UNC 1 1/2"-6 x 76.2	on request	0189 190 6008	10	on request

d = Thread diameter
z = Number of threads of 1 inch (1 inch ≙ 25.4 mm)
L = Length (mm)
P = Pitch (mm)

HELICOIL® plus *repair kits with imperial thread inserts*



American national fine threads (UNF/NF)
Stainless steel A2

Contents:
HELICOIL® plus thread inserts in three lengths
Twist drill
HELICOIL® hand tap HSS
HELICOIL® plus installation mandrel
Tang break-off tool

Thread size d - z	Pitch P [mm]	Order no. **Repair kit**	Number of HELICOIL® Inserts x L	**Repair kit** €	Thread size **Refill pack** d - z x L [mm]	Order no. **Refill pack**	Number of HELICOIL® Inserts	**Refill pack** €
			20 x UNF 4-48 x 2.8		UNF 4-48 x 2.8	4189 065 7004	20	on request
UNF 4-48	0.529	4185 165 7000	20 x UNF 4-48 x 4.3	on request	UNF 4-48 x 4.3	4189 065 7006	20	on request
			20 x UNF 4-48 x 5.7		UNF 4-48 x 5.7	4189 065 7008	20	on request
			20 x UNF 6-40 x 3.5		UNF 6-40 x 3.5	4189 067 7004	20	on request
UNF 6-40	0.635	4185 167 7000	20 x UNF 6-40 x 5.3	on request	UNF 6-40 x 5.3	4189 067 7006	20	on request
			20 x UNF 6-40 x 7.0		UNF 6-40 x 7.0	4189 067 7008	20	on request
			20 x UNF 8-36 x 4.2		UNF 8-36 x 4.2	4189 068 7004	20	on request
UNF 8-36	0.706	4185 168 7000	20 x UNF 8-36 x 6.3	on request	UNF 8-36 x 6.3	4189 068 7006	20	on request
			20 x UNF 8-36 x 8.3		UNF 8-36 x 8.3	4189 068 7008	20	on request
			20 x UNF 10-32 x 4.8		UNF 10-32 x 4.8	4189 069 7004	20	on request
UNF 10-32	0.794	4185 169 7000	20 x UNF 10-32 x 7.2	on request	UNF 10-32 x 7.2	4189 069 7006	20	on request
			20 x UNF 10-32 x 9.6		UNF 10-32 x 9.6	4189 069 7008	20	on request
			20 x UNF 1/4"-28 x 6.4		UNF 1/4"-28 x 6.4	4189 074 7004	20	on request
UNF 1/4"-28	0.907	4185 174 7000	20 x UNF 1/4"-28 x 9.5	on request	UNF 1/4"-28 x 9.5	4189 074 7006	20	on request
			20 x UNF 1/4"-28 x 12.7		UNF 1/4"-28 x 12.7	4189 074 7008	20	on request
			10 x UNF 5/16"-24 x 7.9		UNF 5/16"-24 x 7.9	4189 076 7004	10	on request
UNF 5/16"-24	1.058	4185 176 7000	10 x UNF 5/16"-24 x 11.9	on request	UNF 5/16"-24 x 11.9	4189 076 7006	10	on request
			10 x UNF 5/16"-24 x 15.9		UNF 5/16"-24 x 15.9	4189 076 7008	10	on request
			10 x UNF 3/8"-24 x 9.5		UNF 3/8"-24 x 9.5	4189 077 7004	10	on request
UNF 3/8"-24	1.058	4185 177 7000	10 x UNF 3/8"-24 x 14.3	on request	UNF 3/8"-24 x 14.3	4189 077 7006	10	on request
			10 x UNF 3/8"-24 x 19.1		UNF 3/8"-24 x 19.1	4189 077 7008	10	on request
			10 x UNF 7/16"-20 x 11.1		UNF 7/16"-20 x 11.1	4189 078 7004	10	on request
UNF 7/16"-20	1.270	4185 178 7000	10 x UNF 7/16"-20 x 16.7	on request	UNF 7/16"-20 x 16.7	4189 078 7006	10	on request
			10 x UNF 7/16"-20 x 22.2		UNF 7/16"-20 x 22.2	4189 078 7008	10	on request
			10 x UNF 1/2"-20 x 12.7		UNF 1/2"-20 x 12.7	4189 079 7004	10	on request
UNF 1/2"-20	1.270	4185 179 7000	10 x UNF 1/2"-20 x 19.1	on request	UNF 1/2"-20 x 19.1	4189 079 7006	10	on request
			10 x UNF 1/2"-20 x 25.4		UNF 1/2"-20 x 25.4	4189 079 7008	10	on request

d = Thread diameter
z = Number of threads of 1 inch (1 inch ≙ 25.4 mm)
L = Length (mm)
P = Pitch (mm)

HELICOIL® plus *repair kits with imperial thread inserts*



American national fine threads (UNF/NF)
Stainless steel A2

Contents:
HELICOIL® thread inserts
HELICOIL® hand tap HSS
HELICOIL® manual tap

Thread size d - z	Pitch P [mm]	Order no. **Repair kit**	Number of HELICOIL® Inserts x L [mm]	**Repair kit** €	Order no. **Refill pack**	Number of HELICOIL® Inserts	**Refill pack** €
UNF 9/16"-18	1.411	0185 580 7004	10 x UNF 9/16"-18 x 14.3	on request	0189 180 7004	10	on request
UNF 9/16"-18	1.411	0185 580 7006	10 x UNF 9/16"-18 x 21.5	on request	0189 180 7006	10	on request
UNF 9/16"-18	1.411	0185 580 7008	10 x UNF 9/16"-18 x 28.6	on request	0189 180 7008	10	on request
UNF 5/8"-18	1.411	0185 581 7004	10 x UNF 5/8"-18 x 15.9	on request	0189 181 7004	10	on request
UNF 5/8"-18	1.411	0185 581 7006	10 x UNF 5/8"-18 x 23.8	on request	0189 181 7006	10	on request
UNF 5/8"-18	1.411	0185 581 7008	10 x UNF 5/8"-18 x 31.8	on request	0189 181 7008	10	on request
UNF 3/4"-16	1.588	0185 583 7004	10 x UNF 3/4"-16 x 19.1	on request	0189 183 7004	10	on request
UNF 3/4"-16	1.588	0185 583 7006	10 x UNF 3/4"-16 x 28.6	on request	0189 183 7006	10	on request
UNF 3/4"-16	1.588	0185 583 7008	10 x UNF 3/4"-16 x 38.1	on request	0189 183 7008	10	on request
UNF 7/8"-14	1.814	0185 585 7004	10 x UNF 7/8"-14 x 22.2	on request	0189 185 7004	10	on request
UNF 7/8"-14	1.814	0185 585 7006	10 x UNF 7/8"-14 x 33.3	on request	0189 185 7006	10	on request
UNF 7/8"-14	1.814	0185 585 7008	10 x UNF 7/8"-14 x 44.5	on request	0189 185 7008	10	on request
UNF 1"-12	2.117	0185 586 7004	10 x UNF 1"-12 x 25.4	on request	0189 186 7004	10	on request
UNF 1"-12	2.117	0185 586 7006	10 x UNF 1"-12 x 38.1	on request	0189 186 7006	10	on request
UNF 1"-12	2.117	0185 586 7008	10 x UNF 1"-12 x 50.8	on request	0189 186 7008	10	on request

d = Thread diameter
z = Number of threads of 1 inch (1 inch ≙ 25.4 mm)
L = Length (mm)
P = Pitch (mm)

HELICOIL® plus *repair kits with imperial thread inserts*



British standard coarse threads (BSW)
Stainless steel A2

Contents:
HELICOIL® thread inserts
HELICOIL® hand tap up to BSW 3/4"-10
HELICOIL® two-parts set consisting of pre and final cutter (HSS)
HELICOIL® manual tap
Tang break-off tool up to BSW 5/8"-11

Thread size d - z	Pitch P [mm]	Order no. **Repair kit**	Number of HELICOIL® Inserts x L [mm]	**Repair kit** €	Order no. **Refill pack**	Number of HELICOIL® Inserts	**Refill pack** €
BSW 3/16"-24	1.058	0185 572 3004	20 x BSW 3/16"-24 x 4.8	on request	0189 272 3004	20	on request
BSW 3/16"-24	1.058	0185 572 3006	20 x BSW 3/16"-24 x 7.1	on request	0189 272 3006	20	on request
BSW 3/16"-24	1.058	0185 572 3008	20 x BSW 3/16"-24 x 9.6	on request	0189 272 3008	20	on request
BSW 1/4"-20	1.270	0185 574 3004	20 x BSW 1/4"-20 x 6.4	on request	0189 274 3004	20	on request
BSW 1/4"-20	1.270	0185 574 3006	20 x BSW 1/4"-20 x 9.5	on request	0189 274 3006	20	on request
BSW 1/4"-20	1.270	0185 574 3008	20 x BSW 1/4"-20 x 12.7	on request	0189 274 3008	20	on request
BSW 5/16"-18	1.411	0185 576 3004	20 x BSW 5/16"-18 x 7.9	on request	0189 276 3004	20	on request
BSW 5/16"-18	1.411	0185 576 3006	20 x BSW 5/16"-18 x 11.9	on request	0189 276 3006	20	on request
BSW 5/16"-18	1.411	0185 576 3008	20 x BSW 5/16"-18 x 15.9	on request	0189 276 3008	20	on request
BSW 3/8"-16	1.588	0185 577 3004	20 x BSW 3/8"-16 x 9.5	on request	0189 277 3004	20	on request
BSW 3/8"-16	1.588	0185 577 3006	20 x BSW 3/8"-16 x 14.3	on request	0189 277 3006	20	on request
BSW 3/8"-16	1.588	0185 577 3008	20 x BSW 3/8"-16 x 19.1	on request	0189 277 3008	20	on request
BSW 7/16"-14	1.814	0185 578 3004	20 x BSW 7/16"-14 x 11.1	on request	0189 278 3004	20	on request
BSW 7/16"-14	1.814	0185 578 3006	20 x BSW 7/16"-14 x 16.7	on request	0189 278 3006	20	on request
BSW 7/16"-14	1.814	0185 578 3008	20 x BSW 7/16"-14 x 22.2	on request	0189 278 3008	20	on request
BSW 1/2"-12	2.117	0185 579 3004	20 x BSW 1/2"-12 x 12.7	on request	0189 279 3004	20	on request
BSW 1/2"-12	2.117	0185 579 3006	20 x BSW 1/2"-12 x 19.1	on request	0189 279 3006	20	on request
BSW 1/2"-12	2.117	0185 579 3008	20 x BSW 1/2"-12 x 25.4	on request	0189 279 3008	20	on request
BSW 9/16"-12	2.117	0185 580 3004	20 x BSW 9/16"-12 x 14.3	on request	0189 280 3004	20	on request
BSW 9/16"-12	2.117	0185 580 3006	20 x BSW 9/16"-12 x 21.5	on request	0189 280 3006	20	on request
BSW 9/16"-12	2.117	0185 580 3008	20 x BSW 9/16"-12 x 28.6	on request	0189 280 3008	20	on request
BSW 5/8"-11	2.309	0185 581 3004	10 x BSW 5/8"-11 x 15.9	on request	0189 181 3004	10	on request
BSW 5/8"-11	2.309	0185 581 3006	10 x BSW 5/8"-11 x 23.8	on request	0189 181 3006	10	on request
BSW 5/8"-11	2.309	0185 581 3008	10 x BSW 5/8"-11 x 31.8	on request	0189 181 3008	10	on request
BSW 3/4"-10	2.540	0185 583 3004	10 x BSW 3/4"-10 x 19.1	on request	0189 183 3004	10	on request
BSW 3/4"-10	2.540	0185 583 3006	10 x BSW 3/4"-10 x 28.6	on request	0189 183 3006	10	on request
BSW 3/4"-10	2.540	0185 583 3008	10 x BSW 3/4"-10 x 38.1	on request	0189 183 3008	10	on request
BSW 7/8"-9	2.822	0185 585 3004	10 x BSW 7/8"-9 x 22.2	on request	0189 185 3004	10	on request
BSW 7/8"-9	2.822	0185 585 3006	10 x BSW 7/8"-9 x 33.3	on request	0189 185 3006	10	on request
BSW 7/8"-9	2.822	0185 585 3008	10 x BSW 7/8"-9 x 44.5	on request	0189 185 3008	10	on request
BSW 1"-8	3.175	0185 586 3004	10 x BSW 1"-8 x 25.4	on request	0189 186 3004	10	on request
BSW 1"-8	3.175	0185 586 3006	10 x BSW 1"-8 x 38.1	on request	0189 186 3006	10	on request
BSW 1"-8	3.175	0185 586 3008	10 x BSW 1"-8 x 50.8	on request	0189 186 3008	10	on request
BSW 1 1/8" - 7	3.629	0185 587 3004	10 x BSW 1 1/8"-7 x 28.6	on request	0189 187 3004	10	on request
BSW 1 1/8" - 7	3.629	0185 587 3006	10 x BSW 1 1/8"-7 x 42.9	on request	0189 187 3006	10	on request
BSW 1 1/8" - 7	3.629	0185 587 3008	10 x BSW 1 1/8"-7 x 57.2	on request	0189 187 3008	10	on request
BSW 1 1/4" - 7	3.629	0185 588 3004	10 x BSW 1 1/4"-7 x 31.8	on request	0189 188 3004	10	on request
BSW 1 1/4" - 7	3.629	0185 588 3006	10 x BSW 1 1/4"-7 x 47.6	on request	0189 188 3006	10	on request
BSW 1 1/4" - 7	3.629	0185 588 3008	10 x BSW 1 1/4"-7 x 63.5	on request	0189 188 3008	10	on request
BSW 1 1/2" - 6	4.233	0185 590 3004	10 x BSW 1 1/2"-6 x 38.1	on request	0189 190 3004	10	on request
BSW 1 1/2" - 6	4.233	0185 590 3006	10 x BSW 1 1/2"-6 x 57.2	on request	0189 190 3006	10	on request
BSW 1 1/2" - 6	4.233	0185 590 3008	10 x BSW 1 1/2"-6 x 76.2	on request	0189 190 3008	10	on request

d = Thread diameter
z = Number of threads of 1 inch (1 inch ≙ 25.4 mm)
L = Length (mm)
P = Pitch (mm)

HELICOIL® plus *repair kits with imperial thread inserts*



British standard fine threads (BSF)
Stainless steel A2

Contents :
HELICOIL® thread inserts
HELICOIL® hand tap HSS
HELICOIL® manual tap
Tang break-off tool up to BSF 5/8"-14

Thread size d - z	Pitch P [mm]	Order no. **Repair kit**	Number of HELICOIL® Inserts x L [mm]	**Repair kit** €	Order no. **Refill pack**	Number of HELICOIL® Inserts	**Refill pack** €
BSF 1/4"-26	0.977	0185 574 5004	20 x BSF 1/4"-26 x 6.4	on request	0189 274 5004	20	on request
BSF 1/4"-26	0.977	0185 574 5006	20 x BSF 1/4"-26 x 9.5	on request	0189 274 5006	20	on request
BSF 1/4"-26	0.977	0185 574 5008	20 x BSF 1/4"-26 x 12.7	on request	0189 274 5008	20	on request
BSF 5/16"-22	1.155	0185 576 5004	20 x BSF 5/16"-22 x 7.9	on request	0189 276 5004	20	on request
BSF 5/16"-22	1.155	0185 576 5006	20 x BSF 5/16"-22 x 11.9	on request	0189 276 5006	20	on request
BSF 5/16"-22	1.155	0185 576 5008	20 x BSF 5/16"-22 x 15.9	on request	0189 276 5008	20	on request
BSF 3/8"-20	1.270	0185 577 5004	20 x BSF 3/8"-20 x 9.5	on request	0189 277 5004	20	on request
BSF 3/8"-20	1.270	0185 577 5006	20 x BSF 3/8"-20 x 14.3	on request	0189 277 5006	20	on request
BSF 3/8"-20	1.270	0185 577 5008	20 x BSF 3/8"-20 x 19.1	on request	0189 277 5008	20	on request
BSF 7/16"-18	1.411	0185 578 5004	20 x BSF 7/16"-18 x 11.1	on request	0189 278 5004	20	on request
BSF 7/16"-18	1.411	0185 578 5006	20 x BSF 7/16"-18 x 16.7	on request	0189 278 5006	20	on request
BSF 7/16"-18	1.411	0185 578 5008	20 x BSF 7/16"-18 x 22.2	on request	0189 278 5008	20	on request
BSF 1/2"-16	1.588	0185 579 5004	20 x BSF 1/2"-16 x 12.7	on request	0189 279 5004	20	on request
BSF 1/2"-16	1.588	0185 579 5006	20 x BSF 1/2"-16 x 19.1	on request	0189 279 5006	20	on request
BSF 1/2"-16	1.588	0185 579 5008	20 x BSF 1/2"-16 x 25.4	on request	0189 279 5008	20	on request
BSF 9/16"-16	1.588	0185 580 5004	20 x BSW 9/16"-16 x 14.3	on request	0189 280 5004	20	on request
BSF 9/16"-16	1.588	0185 580 5006	20 x BSW 9/16"-16 x 21.5	on request	0189 280 5006	20	on request
BSF 9/16"-16	1.588	0185 580 5008	20 x BSW 9/16"-16 x 28.6	on request	0189 280 5008	20	on request
BSF 5/8"-14	1.814	0185 581 5004	10 x BSF 5/8"-14 x 15.9	on request	0189 181 5004	10	on request
BSF 5/8"-14	1.814	0185 581 5006	10 x BSF 5/8"-14 x 23.8	on request	0189 181 5006	10	on request
BSF 5/8"-14	1.814	0185 581 5008	10 x BSF 5/8"-14 x 31.8	on request	0189 181 5008	10	on request
BSF 3/4"-12	2.117	0185 583 5004	10 x BSF 3/4"-12 x 19.1	on request	0189 183 5004	10	on request
BSF 3/4"-12	2.117	0185 583 5006	10 x BSF 3/4"-12 x 28.6	on request	0189 183 5006	10	on request
BSF 3/4"-12	2.117	0185 583 5008	10 x BSF 3/4"-12 x 38.1	on request	0189 183 5008	10	on request
BSF 7/8"-11	2.309	0185 585 5004	10 x BSF 7/8"-11 x 22.2	on request	0189 185 5004	10	on request
BSF 7/8"-11	2.309	0185 585 5006	10 x BSF 7/8"-11 x 33.3	on request	0189 185 5006	10	on request
BSF 7/8"-11	2.309	0185 585 5008	10 x BSF 7/8"-11 x 44.5	on request	0189 185 5008	10	on request
BSF 1"-10	2.540	0185 586 5004	10 x BSF 1"-10 x 25.4	on request	0189 186 5004	10	on request
BSF 1"-10	2.540	0185 586 5006	10 x BSF 1"-10 x 38.1	on request	0189 186 5006	10	on request
BSF 1"-10	2.540	0185 586 5008	10 x BSF 1"-10 x 50.8	on request	0189 186 5008	10	on request

d = Thread diameter
z = Number of threads of 1 inch (1 inch ≙ 25.4 mm)
L = Length (mm)
P = Pitch (mm)

HELICOIL® plus *and* HELICOIL® *repair kits with imperial thread inserts*



Pipe threads to DIN ISO 228/1
Stainless steel A2

Contents:
HELICOIL® plus thread inserts up to G 1/2"-14
HELICOIL® thread inserts > G 5/8"-14
HELICOIL® machine tap straight grooved HSS
HELICOIL® manual installation tool

Thread size d - z	Pitch P [mm]	Order no. **Repair kit**	Number of HELICOIL® Inserts x L [mm]	**Repair kit** €	Order no. **Refill pack**	Number of HELICOIL® Inserts	**Refill pack** €
G 1/8"-28	0.907	4185 171 4004	10 x G 1/8"-28 x 3.2	on request	4189 071 4004	10	on request
G 1/8"-28	0.907	4185 171 4006	10 x G 1/8"-28 x 4.8	on request	4189 071 4006	10	on request
G 1/8"-28	0.907	4185 171 4008	10 x G 1/8"-28 x 6.4	on request	4189 071 4008	10	on request
G 1/4"-19	1.337	4185 174 4004	10 x G 1/4"-19 x 6.4	on request	4189 074 4004	10	on request
G 1/4"-19	1.337	4185 174 4006	10 x G 1/4"-19 x 9.5	on request	4189 074 4006	10	on request
G 1/4"-19	1.337	4185 174 4008	10 x G 1/4"-19 x 12.7	on request	4189 074 4008	10	on request
G 3/8"-19	1.337	4185 177 4004	10 x G 3/8"-19 x 9.5	on request	4189 077 4004	10	on request
G 3/8"-19	1.337	4185 177 4006	10 x G 3/8"-19 x 14.3	on request	4189 077 4006	10	on request
G 3/8"-19	1.337	4185 177 4008	10 x G 3/8"-19 x 19.1	on request	4189 077 4008	10	on request
G 1/2"-14	1.814	4185 179 4004	10 x G 1/2"-14 x 12.7	on request	4189 079 4004	10	on request
G 1/2"-14	1.814	4185 179 4006	10 x G 1/2"-14 x 19.1	on request	4189 079 4006	10	on request
G 1/2"-14	1.814	4185 179 4008	10 x G 1/2"-14 x 25.4	on request	4189 079 4008	10	on request
G 5/8"-14	1.814	0185 581 4004	10 x G 5/8"-14 x 15.9	on request	0189 181 4004	10	on request
G 5/8"-14	1.814	0185 581 4006	10 x G 5/8"-14 x 23.8	on request	0189 181 4006	10	on request
G 5/8"-14	1.814	0185 581 4008	10 x G 5/8"-14 x 31.8	on request	0189 181 4008	10	on request
G 3/4"-14	1.814	0185 583 4004	10 x G 3/4"-14 x 19.1	on request	0189 183 4004	10	on request
G 3/4"-14	1.814	0185 583 4006	10 x G 3/4"-14 x 28.6	on request	0189 183 4006	10	on request
G 3/4"-14	1.814	0185 583 4008	10 x G 3/4"-14 x 38.1	on request	0189 183 4008	10	on request
G 7/8"-14	1.814	0185 585 4004	10 x G 7/8"-14 x 22.2	on request	0189 185 4004	10	on request
G 7/8"-14	1.814	0185 585 4006	10 x G 7/8"-14 x 33.3	on request	0189 185 4006	10	on request
G 7/8"-14	1.814	0185 585 4008	10 x G 7/8"-14 x 44.5	on request	0189 185 4008	10	on request
G 1"-11	2.309	0185 586 4004	10 x G 1"-11 x 25.4	on request	0189 186 4004	10	on request
G 1"-11	2.309	0185 586 4006	10 x G 1"-11 x 38.1	on request	0189 186 4006	10	on request
G 1"-11	2.309	0185 586 4008	10 x G 1"-11 x 50.8	on request	0189 186 4008	10	on request

d = Thread diameter
z = Number of threads of 1 inch (1 inch ≙ 25.4 mm)
L = Length (mm)
P = Pitch (mm)

HELICOIL® plus *repair range kits with imperial thread inserts*



UNC 5-40 up to UNC 12-24
American national coarse threads
Stainless steel A2

Contents:
HELICOIL® plus thread inserts of various types and lengths
Twist drill
HELICOIL® hand tap HSS
HELICOIL® plus installation mandrel
Tang break-off tool

Order no. **Repair range kit**	**Repair range kit** €	Thread size **Refill pack** d - z x L [mm]	Pitch P [mm]	Order no. **Refill pack**	Number of HELICOIL® Inserts ①	**Refill pack** €
4186 101 8001	on request	UNC 5-40 x 3.2	0.635	4189 066 6004	20/20	on request
		UNC 5-40 x 4.8	0.635	4189 066 6006	20/20	on request
		UNC 5-40 x 6.4	0.635	4189 066 6008	20/20	on request
		UNC 6-32 x 3.5	0.794	4189 067 6004	20/20	on request
		UNC 6-32 x 5.3	0.794	4189 067 6006	20/20	on request
		UNC 6-32 x 7.0	0.794	4189 067 6008	20/20	on request
		UNC 8-32 x 4.2	0.794	4189 068 6004	20/20	on request
		UNC 8-32 x 6.3	0.794	4189 068 6006	20/20	on request
		UNC 8-32 x 8.3	0.794	4189 068 6008	20/20	on request
		UNC 10-24 x 4.8	1.058	4189 069 6004	20/20	on request
		UNC 10-24 x 7.2	1.058	4189 069 6006	20/20	on request
		UNC 10-24 x 9.6	1.058	4189 069 6008	20/20	on request
		UNC 12-24 x 5.5	1.058	4189 070 6004	20/20	on request
		UNC 12-24 x 8.2	1.058	4189 070 6006	20/20	on request
		UNC 12-24 x 11.0	1.058	4189 070 6008	20/20	on request

d = Thread diameter
z = Number of threads of 1 inch (1 inch ≙ 25.4 mm)
L = Length (mm)
P = Pitch (mm)
① The first number tells the number of thread inserts for the complete range kit.
The second number tells the number of thread inserts for the refill pack.



UNC 1/4"-20 up to UNC 1/2"-13
American national coarse threads
Stainless steel A2

Contents:
HELICOIL® plus thread inserts of various types and lengths
Twist drill
HELICOIL® hand tap HSS
HELICOIL® plus installation mandrel
Tang break-off tool

Order no. **Repair range kit**	**Repair range kit** €	Thread size **Refill pack** d - z x L [mm]	Pitch P [mm]	Order no. **Refill pack**	Number of HELICOIL® Inserts ①	**Refill pack** €
4186 101 6001	on request	UNC 1/4"-20 x 6.4	1.270	4189 074 6004	20/20	on request
		UNC 1/4"-20 x 9.5	1.270	4189 074 6006	20/20	on request
		UNC 1/4"-20 x 12.7	1.270	4189 074 6008	20/20	on request
		UNC 5/16"-18 x 7.2	1.411	4189 0766 004	10/10	on request
		UNC 5/16"-18 x 11.2	1.411	4189 0766 006	10/10	on request
		UNC 5/16"-18 x 15.2	1.411	4189 0766 008	10/10	on request
		UNC 3/8"-16 x 9.5	1.588	4189 077 6004	10/10	on request
		UNC 3/8"-16 x 14.3	1.588	4189 077 6006	10/10	on request
		UNC 3/8"-16 x 19.1	1.588	4189 077 6008	10/10	on request
		UNC 7/16"-14 x 11.1	1.814	4189 078 6004	10/10	on request
		UNC 7/16"-14 x 16.7	1.814	4189 078 6006	10/10	on request
		UNC 7/16"-14 x 22.2	1.814	4189 078 6008	10/10	on request
		UNC 1/2"-13 x 12.7	1.954	4189 079 6004	10/10	on request
		UNC 1/2"-13 x 19.1	1.954	4189 079 6006	10/10	on request
		UNC 1/2"-13 x 25.4	1.954	4189 079 6008	10/10	on request

d = Thread diameter
z = Number of threads of 1 inch (1 inch ≙ 25.4 mm)
L = Length (mm)
P = Pitch (mm)
① The first number tells the number of thread inserts for the complete range kit.
The second number tells the number of thread inserts for the refill pack.

HELICOIL® plus *repair range kits with imperial thread inserts*



UNF 4-48 up to UNF 1/4"-28
American national fine threads
Stainless steel A2

Contents:
HELICOIL® plus thread inserts of various types and lengths
Twist drill
HELICOIL® hand tap HSS
HELICOIL® plus installation mandrel
Tang break-off tool

Order no. **Repair range kit**	**Repair range kit** €	Thread size **Refill pack** d - z x L [mm]	Pitch P [mm]	Order no. **Refill pack**	Number of HELICOIL® Inserts ①	**Refill pack** €
4186 101 9001	on request	UNF 4-48 x 2.8	0.529	4189 065 7004	20/20	on request
		UNF 4-48 x 4.3	0.529	4189 065 7006	20/20	on request
		UNF 4-48 x 5.7	0.529	4189 065 7008	20/20	on request
		UNF 6-40 x 3.5	0.635	4189 067 7004	20/20	on request
		UNF 6-40 x 5.3	0.635	4189 067 7006	20/20	on request
		UNF 6-40 x 7.0	0.635	4189 067 7008	20/20	on request
		UNF 8-36 x 4.2	0.706	4189 068 7004	20/20	on request
		UNF 8-36 x 6.3	0.706	4189 068 7006	20/20	on request
		UNF 8-36 x 8.3	0.706	4189 068 7008	20/20	on request
		UNF 10-32 x 4.8	0.794	4189 069 7004	20/20	on request
		UNF 10-32 x 7.2	0.794	4189 069 7006	20/20	on request
		UNF 10-32 x 9.6	0.794	4189 069 7008	20/20	on request
		UNF 1/4"-28 x 6.4	0.907	4189 074 7004	20/20	on request
		UNF 1/4"-28 x 6.4	0.907	4189 074 7006	20/20	on request
		UNF 1/4"-28 x 12.7	0.907	4189 074 7008	20/20	on request

d = Thread diameter
z = Number of threads of 1 inch (1 inch ≙ 25.4 mm)
L = Length (mm)
P = Pitch (mm)
① The first number tells the number of thread inserts for the complete range kit.
The second number tells the number of thread inserts for the refill pack.



UNF 1/4"-28 up to UNF 1/2"-20
American national fine threads
Stainless steel A2

Contents:
HELICOIL® plus thread inserts of various types and lengths
Twist drill
HELICOIL® hand tap HSS
HELICOIL® plus installation mandrel
Tang break-off tool

Order no. **Repair range kit**	**Repair range kit** €	Thread size **Refill pack** d - z x L [mm]	Pitch P [mm]	Order no. **Refill pack**	Number of HELICOIL® Inserts ①	**Refill pack** €
4186 101 7001	on request	UNF 1/4"-28 x 6.4	0.907	4189 074 7004	20/20	on request
		UNF 1/4"-28 x 6.4	0.907	4189 074 7006	20/20	on request
		UNF 1/4"-28 x 12.7	0.907	4189 074 7008	20/20	on request
		UNF 5/16"-24 x 7.9	1.058	4189 076 7004	10/10	on request
		UNF 5/16"-24 x 11.9	1.058	4189 076 7006	10/10	on request
		UNF 5/16"-24 x 15.9	1.058	4189 076 7008	10/10	on request
		UNF 3/8"-24 x 9.5	1.058	4189 077 7004	10/10	on request
		UNF 3/8"-24 x 14.3	1.058	4189 077 7006	10/10	on request
		UNF 3/8"-24 x 19.1	1.058	4189 077 7008	10/10	on request
		UNF 7/16"-20 x 11.1	1.270	4189 078 7004	10/10	on request
		UNF 7/16"-20 x 16.7	1.270	4189 078 7006	10/10	on request
		UNF 7/16"-20 x 22.2	1.270	4189 078 7008	10/10	on request
		UNF 1/2"-20 x 12.7	1.270	4189 079 7004	10/10	on request
		UNF 1/2"-20 x 19.1	1.270	4189 079 7006	10/10	on request
		UNF 1/2"-20 x 25.4	1.270	4189 079 7008	10/10	on request

d = Thread diameter
z = Number of threads of 1 inch (1 inch ≙ 25.4 mm)
L = Length (mm)
P = Pitch (mm)
① The first number tells the number of thread inserts for the complete range kit.
The second number tells the number of thread inserts for the refill pack.

HELICOIL® *repair range kits with imperial thread inserts*



BSW 1/4"-20 up to BSW 1/2"-12
British standard coarse threads
(Whitworth threads)
Stainless steel A2

Order no. **Repair range kit**	**Repair range kit** €	Thread size **Refill pack** d - z x L [mm]	Pitch P [mm]	Order no. **Refill pack**	Number of HELICOIL® Inserts ①	**Refill pack** €
0186 101 3001	on request	BSW 1/4"-20 x 9.5	1.270	0189 274 3006	20/20	on request
		BSW 5/16"-18 x 11.9	1.411	0189 276 3006	20/20	on request
		BSW 3/8"-16 x 14.3	1.588	0189 277 3006	20/20	on request
		BSW 7/16"-14 x 16.7	1.814	0189 278 3006	10/20	on request
		BSW 1/2"-12 x 19.1	2.117	0189 279 3006	10/20	on request

d = Thread diameter
z = Number of threads of 1 inch (1 inch ≙ 25.4 mm)
L = Length (mm)
P = Pitch (mm)
① The first number tells the number of thread inserts for the complete range kit.
The second number tells the number of thread inserts for the refill pack.

Contents:
HELICOIL® thread inserts of various types in 1 length
HELICOIL® hand tap HSS
HELICOIL® universal manual tap with spindles and prewinder to suit sizes
Tang break-off tool

Twist drills for HELICOIL® *and* HELICOIL® plus



Type according to **DIN 338**
Normal helix angle, web thickness and web taper
Type: 0149.5



Short type according to **DIN 1897**
Ideal for low-depth drilling
(drilling depth ca. 2 - 4 x D)
Type: 0149.9

d = Ø h8 [mm]	Overall length [mm]	Equal to DIN	For HELICOIL®-mounting thread	Order no.	€
2.1	49	338	M 2	0149 **5**02 1000	on request
2.4	57	338	UNC 2-56	0149 **5**02 4000	on request
2.6	57	338	M 2.5	0149 **5**02 6000	on request
2.7	61	338	TWINSERT M 2	0149 **5**02 7000	on request
3.0	61	338	UNF 4-48	0149 **5**03 0000	on request
3.1	65	338	UNC 4-40	0149 **5**03 1000	on request
3.2	65	338	M 3	0149 **5**03 2000	on request
3.4	70	338	UNC 5-40	0149 **5**03 4000	on request
3.7	70	338	M 3.5	0149 **5**03 7000	on request
3.8	75	338	UNC 6-32 UNF 6-40. TWINSERT M 3	0149 **5**03 8000	on request
4.2	75	338	M 4	0149 **5**04 2000	on request
4.4	80	338	UNC 8-32 UNF 8-36	0149 **5**04 4000	on request
4.5	80	338	TWINSERT M 3.5	0149 **5**04 5000	on request
5.1	86	338	UNF 10-32. TWINSERT M 4	0149 **5**05 1000	on request
5.2	86	338	M 5 UNC 10-24	0149 **5**05 2000	on request
5.8	93	338	UNC 12-24	0149 **5**05 8000	on request
6.3	101	338	M 6	0149 **5**06 3000	on request
6.7	101	338	UNC 1/4"-20 UNF 1/4"-28	0149 **5**06 7000	on request
7.3	109	338	M 7	0149 **5**07 3000	on request
7.6	117	338	TWINSERT M 6	0149 **5**07 6000	on request
8.2	79	1897	UNF 5/16"-24	0149 **9**08 2001	on request
8.3	79	1897	M 8 X 1	0149 **9**08 3001	on request
8.4	79	1897	M 8 UNC 5/16"-18	0149 **9**08 4001	on request
9.4	125	338	M 9	0149 **5**09 4000	on request
9.8	89	1897	UNF 3/8"-24	0149 **9**09 8001	on request
10.0	89	1897	UNC 3/8"-16	0149 **9**10 0001	on request
10.25	89	1897	M 10 X 1	0149 **5**10 2500	on request
10.4	133	1897	M 10 X 1.25	0149 **9**10 4001	on request
10.5	89	1897	M 10	0149 **9**10 5001	on request
11.5	95	1897	M 11. UNF 7/16"-20	0149 **9**11 5001	on request
11.6	95	1897	UNC 7/16"-14	0149 **9**11 6001	on request
12.5	102	1897	M 12. TWINSERT M 10	0149 **9**12 5000	on request
13.1	102	1897	UNF 1/2"-20	0149 **9**13 1001	on request
13.2	102	1897	UNC 1/2"-13	0149 **9**13 2001	on request

Hand taps **HELICOIL® plus** *and* **HELICOIL®**



Type 0140.0

HELICOIL® cutting taps

- for coarse threads up to P = 2 mm
- for fine threads up to P = 3 mm
- For cutting operations of materials with strengths up 700 N/mm²
- For through holes
- For blind holes only if there is sufficient tapping space. The core holes to be cut at least 1 d deeper than the fully cut thread length.

① Standard HELICOIL® hand taps produce a holding thread of tolerance class 5H (6H mod). The HELICOIL® installation results in an ISO thread of tolerance class 6H. For HELICOIL® holding threads of tolerance class 4H (5H mod) the ninth digit of the product code changes from 1 to 2. The HELICOIL® installation results in an ISO thread of tolerance class 5H.

② The prices of HELICOIL® hand taps depend on the price of the relevant alloy on the supply date.

TiN coated taps can be supplied on request.

The cutting taps can also be supplied as machine taps.

Taps for special requirements, such as hard or tough materials, can be supplied on request.

For more detailed information, please ask for our catalogue 0100.

Thread size	Short machine taps for tolerance class 6H ① **Type 0140.0**	
d (x P)	Order no.	€ ②
M 2	0140 002 0104	on request
M 2.5	0140 025 0104	on request
M 3	0140 003 0104	on request
M 3.5	0140 035 0104	on request
M 4	0140 004 0104	on request
M 5	0140 005 0104	on request
M 6	0140 006 0104	on request
M 7	0140 007 0104	on request
M 8	0140 008 0104	on request
M 8 x 1	0140 008 3104	on request
M 9	0140 009 0104	on request
M 10	0140 010 0104	on request
M 10 x 1	0140 010 3104	on request
M 10 x 1.25	0140 010 9104	on request
M 11	0140 011 0104	on request
M 12	0140 012 0104	on request
M 12 x 1	0140 012 3104	on request
M 12 x 1.25	0140 012 9104	on request
M 12 x 1.5	0140 012 4104	on request
M 14	0140 014 0104	on request
M 14 x 1	0140 014 3104	on request
M 14 x 1.25	0140 014 9104	on request
M 14 x 1.5	0140 014 4104	on request
M 16	0140 016 0104	on request
M 16 x 1.5	0140 016 4104	on request
M 18 x 1.5	0140 018 4104	on request
M 18 x 2	0140 018 5104	on request
M 20 x 1.5	0140 020 4104	on request
M 20 x 2	0140 020 5104	on request
M 22 x 1.5	0140 022 4104	on request
M 22 x 2	0140 022 5104	on request
M 24 x 1.5	0140 024 4104	on request
M 24 x 2	0140 024 5104	on request
M 26 x 1.5	0140 026 4104	on request
M 27 x 1.5	0140 027 4104	on request
M 27 x 2	0140 027 5104	on request
M 28 x 1.5	0140 028 4104	on request
M 30 x 1.5	0140 030 4104	on request
M 30 x 2	0140 030 5104	on request
M 33 x 2	0140 033 5104	on request
M 36 x 1.5	0140 036 4104	on request
M 36 x 2	0140 036 5104	on request
M 36 x 3	0140 036 6104	on request

Hand taps for HELICOIL® plus *and* HELICOIL®



Type 0140.1-2

HELICOIL® manual taps, two-parts set, graded pitch

■ Pre-tap	4-action cut	0140.1…
■ Final tap	2-action cut	0140.2…

Applications for tap sets:
- Thread diameters ≥ M 18
- In case of materials that are hardly machinable also for dimensions < M 18
- Pitches up to P = 3.5 mm
- Cutting operation of materials up to 700 N/mm²
- For through or blind holes

Tap sets reduce the required input torque.

① Standard HELICOIL® hand taps produce a holding thread of tolerance class 5H (6H mod). The HELICOIL® installation results in an ISO thread of tolerance class 6H. For HELICOIL® holding threads of tolerance class 4H (5H mod) the ninth digit of the product code changes from 1 to 2. The HELICOIL® installation results in an ISO thread of tolerance class 5H.

② The prices of HELICOIL® hand taps depend on the price of the relevant alloy on the supply date.

TiN coated taps can be supplied on request.

The cutting taps can also be supplied as machine taps.

Taps for special requirements, such as hard or tough materials, can be supplied on request.

For more detailed information, please ask for our catalogue 0100.

Thread size	Tap set for tolerance class 6H ① (1 set)			
	Pre cutter Type 0140.1		Final cutter Type 0140.2	
d (x P)	Order no.	€ ②	Order no.	€ ②
M 2	0140 102 0104	on request	0140 202 0102	on request
M 2.5	0140 125 0104	on request	0140 225 0102	on request
M 3	0140 103 0104	on request	0140 203 0102	on request
M 3.5	0140 135 0104	on request	0140 235 0102	on request
M 4	0140 104 0104	on request	0140 204 0102	on request
M 5	0140 105 0104	on request	0140 205 0102	on request
M 6	0140 106 0104	on request	0140 206 0102	on request
M 7	0140 107 0104	on request	0140 207 0102	on request
M 8	0140 108 0104	on request	0140 208 0102	on request
M 8 x 1	0140 108 3104	on request	0140 208 3102	on request
M 9	0140 109 0104	on request	0140 209 0102	on request
M 10	0140 110 0104	on request	0140 210 0102	on request
M 10 x 1	0140 110 3104	on request	0140 210 3102	on request
M 10 x 1.25	0140 110 9104	on request	0140 210 9102	on request
M 11	0140 111 0104	on request	0140 211 0102	on request
M 12	0140 112 0104	on request	0140 212 0102	on request
M 12 x 1	0140 112 3104	on request	0140 212 3102	on request
M 12 x 1.25	0140 112 9104	on request	0140 212 9102	on request
M 12 x 1.5	0140 112 4104	on request	0140 212 4102	on request
M 14	0140 114 0104	on request	0140 214 0102	on request
M 14 x 1	0140 114 3104	on request	0140 214 3102	on request
M 14 x 1.25	0140 114 9104	on request	0140 214 9102	on request
M 14 x 1.5	0140 114 4104	on request	0140 214 4102	on request
M 16	0140 116 0104	on request	0140 216 0102	on request
M 16 x 1.5	0140 116 4104	on request	0140 216 4102	on request
M 18	0140 118 0104	on request	0140 218 0102	on request
M 18 x 1.5	0140 118 4104	on request	0140 218 4102	on request
M 18 x 2	0140 118 5104	on request	0140 218 5102	on request
M 20	0140 120 0104	on request	0140 220 0102	on request
M 20 x 1.5	0140 120 4104	on request	0140 220 4102	on request
M 20 x 2	0140 120 5104	on request	0140 220 5102	on request
M 22	0140 122 0104	on request	0140 222 0102	on request
M 22 x 1.5	0140 122 4104	on request	0140 222 4102	on request
M 22 x 2	0140 122 5104	on request	0140 222 5102	on request
M 24	0140 124 0104	on request	0140 224 0102	on request
M 24 x 1.5	0140 124 4104	on request	0140 224 4102	on request
M 24 x 2	0140 124 5104	on request	0140 224 5102	on request
M 26 x 1.5	0140 126 4104	on request	0140 226 4102	on request
M 27	0140 127 0104	on request	0140 227 0102	on request
M 27 x 1.5	0140 127 4104	on request	0140 227 4102	on request
M 27 x 2	0140 127 5104	on request	0140 227 5102	on request
M 28 x 1.5	0140 128 4104	on request	0140 228 4102	on request
M 30	0140 130 0104	on request	0140 230 0102	on request
M 30 x 1.5	0140 130 4104	on request	0140 230 4102	on request
M 30 x 2	0140 130 5104	on request	0140 230 5102	on request
M 33	0140 133 0104	on request	0140 233 0102	on request
M 33 x 2	0140 133 5104	on request	0140 233 5102	on request
M 36 x 1.5	0140 136 4104	on request	0140 236 4102	on request
M 36 x 2	0140 136 5104	on request	0140 236 5102	on request
M 36 x 3	0140 136 6104	on request	0140 236 6102	on request

Combined drilling and tapping tools for **HELICOIL® plus** *and* **HELICOIL®**



For tapping HELICOIL® holding threads in damaged metric standard and fine threads.

Pre-drilling of the HELICOIL® holding thread is not necessary. For blind holes the tool is only usable under certain conditions due to the guiding unit d 3 x L 5.

Thread size d (x P)	Order no.	€
M 6	0142 006 0102	on request
M 8	0142 008 0102	on request
M 10	0142 010 0102	on request
M 10 x 1	0142 910 3450	on request
M 12	0142 912 0450	on request
M 12 x 1.25	0142 912 9450	on request
M 12 x 1.5	0142 912 4450	on request
M 14	0142 914 0450	on request
M 14 x 1.25*	0142 914 9450	on request
M 14 x 1.25**	0142 014 9102	on request
M 14 x 1.5	0142 914 4450	on request
M 16	0142 916 0450	on request
M 16 x 1.5	0142 916 4450	on request

* L1 = 92
** L1 = 153

Machine tap former for **HELICOIL® plus** *and* **HELICOIL®**



Non-cutting forming of inner threads for through hole and blind holes

With lubrication grooves

Perfect lubrication even at larger depths

Speeds corresponding to thread tap

Lubrication:
Lubricant containing oils or emulsions containing grease

Material range:
Mouldable materials such as aluminium, copper and zinc alloys, steel up to 700 N/mm², stainless steels.

Thread size d (x P)	Standard value formed hole Ø d_F	Order no. ①	€
M 3	3.4	0144 103 0004	on request
M 3.5	4.0	0144 135 0004	on request
M 4	4.6	0144 104 0004	on request
M 5	5.6	0144 105 0004	on request
M 6	6.8	0144 106 0004	on request
M 8	9.0	0144 108 0004	on request
M 10	11.2	0144 110 0004	on request
M 12	13.4	0144 112 0004	on request

Other dimensions upon request.
We also provide TiN-coated thread former.
① For tolerance class 4H the ninth digit in the ordering ref. no. changes from 5 to 4. Details refer to catalogue 0100.

Machine taps for **HELICOIL® plus** *and* **HELICOIL®**



Type 0141.1

HELICOIL® machine taps, straight grooved, tapping angle 10°, with curling cut, 4 action cut for through holes, for blind holes with deep-drilled thread hole.

- For pitches up to P = 3.5 mm
- For materials below and above 700 N/mm² strength.
- For through-hole tapping.

① Standard HELICOIL® hand taps produce a holding thread of tolerance class 5H (6H mod).
The HELICOIL® installation results in an ISO thread of tolerance class 6H. For HELICOIL® holding threads of tolerance class 4H (5H mod) the ninth digit of the product code changes from 1 to 2.
The HELICOIL® installation results in an ISO thread of tolerance class 5H.

② The prices of HELICOIL® hand taps depend on the price of the relevant alloy on the supply date.

TiN coated taps can be supplied on request.

The short machine tap can also be supplied as a machine tap.

Taps for special requirements, such as hard or tough materials, can be supplied on request.

For more detailed information please ask for our catalogue 0100.

Thread size	Machine tap for tolerance class 6H ① **Type 0141.1**	
d (x P)	Order no.	€ ②
M 2	0141 102 0104	on request
M 2.5	0141 125 0104	on request
M 3	0141 103 0104	on request
M 3.5	0141 135 0104	on request
M 4	0141 104 0104	on request
M 5	0141 105 0104	on request
M 6	0141 106 0104	on request
M 7	0141 107 0104	on request
M 8	0141 108 0104	on request
M 8 x 1	0141 108 3104	on request
M 9	0141 109 0104	on request
M 10	0141 110 0104	on request
M 10 x 1	0141 110 3104	on request
M 10 x 1.25	0141 110 9104	on request
M 11	0141 111 0104	on request
M 12	0141 112 0104	on request
M 12 x 1	0141 112 3104	on request
M 12 x 1.25	0141 112 9104	on request
M 12 x 1.5	0141 112 4104	on request
M 14	0141 114 0104	on request
M 14 x 1	0141 114 3104	on request
M 14 x 1.25	0141 114 9104	on request
M 14 x 1.5	0141 114 4104	on request
M 16	0141 116 0104	on request
M 16 x 1.5	0141 116 4104	on request
M 18	0141 118 0104	on request
M 18 x 1.5	0141 118 4104	on request
M 18 x 2	0141 118 5104	on request
M 20	0141 120 0104	on request
M 20 x 1.5	0141 120 4104	on request
M 20 x 2	0141 120 5104	on request
M 22	0141 122 0104	on request
M 22 x 1.5	0141 122 4104	on request
M 22 x 2	0141 122 5104	on request
M 24	0141 124 0104	on request
M 24 x 1.5	0141 124 4104	on request
M 24 x 2	0141 124 5104	on request
M 26 x 1.5	0141 126 4104	on request
M 27	0141 127 0104	on request
M 27 x 1.5	0141 127 4104	on request
M 28 x 1.5	0141 128 4104	on request
M 30	0141 130 0104	on request
M 30 x 1.5	0141 130 4104	on request
M 30 x 2	0141 130 5104	on request
M 33	0141 133 0104	on request
M 33 x 2	0141 133 5104	on request
M 36	0141 136 0104	on request
M 36 x 1.5	0141 136 4104	on request
M 36 x 2	0141 136 5104	on request
M 36 x 3	0141 136 6104	on request

Machine taps for **HELICOIL® plus** *and* **HELICOIL®**



Type 0141.4

HELICOIL® machine taps, spiral grooves 45° right-hand twist, tapping angle 15°, 2-turn cut for blind holes.

- For pitches up to P = 1.5 mm
- For materials up to approximately 700 N/mm² strength
- For blind hole tapping

① Standard HELICOIL® hand taps produce a holding thread of tolerance class 5H (6H mod).
The HELICOIL® installation results in an ISO thread of tolerance class 6H. For HELICOIL® holding threads of tolerance class 4H (5H mod) the ninth digit of the product code changes from 1 to 2.
The HELICOIL® installation results in an ISO thread of tolerance class 5H.

② The prices of HELICOIL® hand taps depend on the price of the relevant alloy on the supply date.

TiN coated taps can be supplied on request.

The short machine tap can also be supplied as a machine tap.

Taps for special purposes, such as for use on hard or tough materials, can be supplied on request.

For more detailed information please ask for our catalogue 0100.

Thread size	Machine tap for tolerance class 6H ① **Type 0141.4**	
d (x P)	Order no.	€ ②
M 2	0141 402 0152	on request
M 2.5	0141 425 0152	on request
M 3	0141 403 0152	on request
M 3.5	0141 435 0152	on request
M 4	0141 404 0152	on request
M 5	0141 405 0152	on request
M 6	0141 406 0152	on request
M 7	0141 407 0152	on request
M 8	0141 408 0152	on request
M 8 x 1	0141 408 3152	on request
M 9	0141 409 0152	on request
M 10	0141 410 0152	on request
M 10 x 1	0141 410 3152	on request
M 11	0141 411 0152	on request
M 12	0141 412 0152	on request
M 12 x 1	0141 412 3152	on request
M 12 x 1.5	0141 412 4152	on request
M 14 x 1	0141 414 3152	on request
M 14 x 1.5	0141 414 4152	on request
M 16 x 1.5	0141 416 4152	on request
M 18 x 1.5	0141 418 4152	on request
M 20 x 1.5	0141 420 4152	on request
M 22 x 1.5	0141 422 4152	on request
M 24 x 1.5	0141 424 4152	on request
M 26 x 1.5	0141 426 4152	on request
M 27 x 1.5	0141 427 4152	on request
M 28 x 1.5	0141 428 4152	on request
M 30 x 1.5	0141 430 4152	on request
M 36 x 1.5	0141 436 4152	on request

Machine taps for **HELICOIL® plus** *and* **HELICOIL®**



Type 0141.5

HELICOIL® machine taps, spiral grooves 40° right hand twist, cutting angle 10°, 2-3 turn cut for blind holes, for blind holes with deep-drilled thread hole.

- For pitches up to p = 3 mm
- For materials over 700 N/mm² strength
- For blind hole tapping

① Standard HELICOIL® hand taps produce a holding thread of tolerance class 5H (6H mod).
The HELICOIL® installation results in an ISO thread of tolerance class 6H. For HELICOIL® holding threads of tolerance class 4H (5H mod) the ninth digit of the product code changes from 1 to 2.
The HELICOIL® installation results in an ISO thread of tolerance class 5H.

② The prices of HELICOIL® hand taps depend on the price of the relevant alloy on the supply date.

TiN coated taps can be supplied on request.

The short machine tap can also be supplied as a machine tap.

Taps for special requirements, such as hard or tough materials, can be supplied on request.

For more detailed information please ask for our catalogue 0100.

Thread size	Machine tap for tolerance class 6H ① **Type 0141.5**	
d (x P)	Order no.	€ ②
M 2	0141 502 0102	on request
M 2.5	0141 525 0102	on request
M 3	0141 503 0102	on request
M 3.5	0141 535 0102	on request
M 4	0141 504 0102	on request
M 5	0141 505 0102	on request
M 6	0141 506 0102	on request
M 7	0141 507 0102	on request
M 8	0141 508 0102	on request
M 8 x 1	0141 508 3102	on request
M 9	0141 509 0102	on request
M 10	0141 510 0102	on request
M 10 x 1	0141 510 3102	on request
M 10 x 1.25	0141 510 9102	on request
M 11	0141 511 0102	on request
M 12	0141 512 0102	on request
M 12 x 1	0141 512 3102	on request
M 12 x 1.25	0141 512 9102	on request
M 12 x 1.5	0141 512 4102	on request
M 14	014 1514 0102	on request
M 14 x 1	0141 514 3102	on request
M 14 x 1.5	0141 514 4102	on request
M 16	0141 516 0102	on request
M 16 x 1.5	0141 516 4102	on request
M 18	0141 518 0102	on request
M 18 x 1.5	0141 518 4102	on request
M 18 x 2	0141 518 5102	on request
M 20	0141 520 0102	on request
M 20 x 1.5	0141 520 4102	on request
M 20 x 2	0141 520 5102	on request
M 22	0141 522 0102	on request
M 22 x 1.5	0141 522 4102	on request
M 22 x 2	0141 522 5102	on request
M 24	0141 524 0102	on request
M 24 x 1.5	0141 524 4102	on request
M 24 x 2	0141 524 5102	on request
M 26 x 1.5	0141 526 4102	on request
M 27	0141 527 0102	on request
M 27 x 1.5	0141 527 4102	on request
M 27 x 2	0141 527 5102	on request
M 28 x 1.5	0141 528 4102	on request
M 30	0141 530 0102	on request
M 30 x 1.5	0141 530 4102	on request
M 30 x 2	0141 530 5102	on request
M 33	0141 533 0102	on request
M 33 x 2	0141 533 5102	on request
M 36	0141 536 0102	on request
M 36 x 2	0141 536 5102	on request
M 36 x 3	0141 536 6102	on request

Installation mandrel for **HELICOIL® plus**



Only for HELICOIL® plus thread inserts type free running.

Not to be used for type SCREWLOCK®!

Thread size d (x P)	Installation mandrel for HELICOIL® plus Order no.	€
M 2.5	4150 012 5000	on request
M 3	4150 010 3000	on request
M 3.5	4150 013 5000	on request
M 4	4150 010 4000	on request
M 5	4150 010 5000	on request
M 6	4150 010 6000	on request
M 7	4150 010 7000	on request
M 8	4150 010 8000	on request
M 8 x 1	4150 010 8300	on request
M 9	4150 010 9000	on request
M 10	4150 011 0000	on request
M 10 x 1	4150 011 0300	on request
M 10 x 1.25	4150 011 0900	on request
M 11	4150 011 1000	on request
M 12	4150 011 2000	on request
M 12 x 1.25	4150 011 2900	on request
M 12 x 1.5	4150 011 2400	on request
M 14	4150 011 4000	on request
M 14 x 1.25	4150 011 4900	on request
M 14 x 1.5	4150 011 4400	on request
M 16	4150 011 6000	on request
M 16 x 1.5	4150 011 6400	on request
M 18	4150 011 8000	on request
M 20	4150 012 0000	on request
M 22	4150 012 2000	on request
M 24	4150 012 4000	on request

Fly-over tool for **HELICOIL® plus** *and* **HELICOIL®**



Fly-over tool for
HELICOIL® and HELICOIL® plus
Type **H-M**
with bit gauge
Order no. 0150 **07**. ...*

Suitable both for types free running and SCREWLOCK®.
The tool finish depends on the thread size and the pitch.

Thread size d	Fly-over tool for HELICOIL® plus Type H-M Order no.	€
M 18	0150 071 8000	on request
M 20	0150 072 0000	on request
M 22	0150 072 2000	on request
M 24	0150 072 4000	on request
M 27	0150 072 7000	on request
M 30	0150 073 0000	on request
M 33	0150 073 3000	on request
M 36	0150 073 6000	on request

* For thread inserts made from NiCr 15 Fe 7 Ti Al, NiCr 20 Co 18 Ti, AlZn Mg Cu 1,5 adapted tools upon request.

Manual insertion tools for HELICOIL® plus *and* HELICOIL®

Manual installation mandrel, with pre-stressing cartridge for HELICOIL® and HELICOIL® plus only for special utilisation and fine thread pitches. Not necessary for HELICOIL® plus.



Type **H-PSG**:
Threaded mandrel, pitch guided, with bit gauge
Order no. 0150 **01**. ...*



Type **H-PMG**:
Flat mandrel, pitch guided, with bit gauge
Order no. 0150 **02**. ...*



Type **H-PM**:
Flat mandrel, without pitch guiding, with bit gauge
Order no. 0150 **04**. ...*

Thread size	Insertion tool with prewinder		
d (x P)	Type	Order no.	€
M 2	H-PMG M 2	0150 020 2000	on request
M 2.5	H-PMG M 2.5	0150 022 5000	on request
M 3	H-PMG M 3	0150 020 3000	on request
M 3.5	H-PMG M 3.5	0150 023 5000	on request
M 4	H-PMG M 4	0150 020 4000	on request
M 5	H-PMG M 5	0150 020 5000	on request
M 6	H-PM M 6	0150 040 6000	on request
M 7	H-PSG M 7	0150 010 7000	on request
M 8	H-PM M 8	0150 040 8000	on request
M 8 x 1	H-PSG M 8 x 1	0150 010 8300	on request
M 9	H-PM M 9	0150 040 9000	on request
M 10	H-PM M 10	0150 041 0000	on request
M 10 x 1	H-PSG M 10 x 1	0150 011 0300	on request
M 10 x 1.25	H-PSG M 10 x 1.25	0150 011 0900	on request
M 11	H-PM M 11	0150 041 1000	on request
M 12	H-PM M 12	0150 041 2000	on request
M 12 x 1	H-PSG M 12 x 1	0150 011 2300	on request
M 12 x 1.25	H-PSG M 12 x 1.25	0150 011 2900	on request
M 12 x 1.5	H-PSG M 12 x 1.5	0150 011 2400	on request
M 14	H-PM M 14	0150 041 4000	on request
M 14 x 1	H-PSG M 14 x 1	0150 011 4300	on request
M 14 x 1.5	H-PSG M 14 x 1.5	0150 011 4400	on request
M 16	H-PM M 16	0150 041 6000	on request
M 16 x 1.5	H-PMG M 16 x 1.5	0150 021 6400	on request
M 18 x 1.5	H-PSG M 18 x 1.5	0150 011 8400	on request
M 18 x 2	H-PSG M 18 x 2	0150 011 8500	on request
M 20	see page 31		
M 20 x 1.5	H-PSG M 20 x 1.5	0150 012 0400	on request
M 20 x 2	H-PSG M 20 x 2	0150 012 0500	on request
M 22	see page 31		
M 22 x 1.5	H-PSG M 22 x 1.5	0150 012 2400	on request
M 22 x 2	H-PSG M 22 x 2	0150 012 2500	on request
M 24	see page 31		
M 24 x 1.5	H-PSG M 24 x 1.5	0150 012 4400	on request
M 24 x 2	H-PSG M 24 x 2	0150 012 4500	on request
M 26 x 1.5	H-PSG M 26 x 1.5	0150 012 6400	on request
M 27	see page 31		
M 27 x 1.5	H-PSG M 27 x 1.5	0150 012 7400	on request
M 27 x 2	H-PSG M 27 x 2	0150 012 7500	on request
M 28 x 1.5	H-PSG M 28 x 1.5	0150 012 8400	on request
M 30	see page 31		
M 30 x 1.5	H-PSG M 30 x 1.5	0150 013 0400	on request
M 30 x 2	H-PSG M 30 x 2	0150 013 0500	on request
M 33	see page 31		
M 33 x 2	H-PSG M 33 x 2	0150 013 3500	on request
M 36	see page 31		
M 36 x 1.5	H-PSG M 36 x 1.5	0150 013 6400	on request
M 36 x 2	H-PSG M 36 x 2	0150 013 6500	on request
M 36 x 3	H-PSG M 36 x 3	0150 013 6600	on request

* For thread inserts made from NiCr 15 Fe 7 Ti Al, NiCr 20 Co 18 Ti, AlZn Mg Cu 1,5 adapted tools upon request.

Tang break-off tools for HELICOIL® plus *and* HELICOIL®



From sizes M 14, the tang can be broken off with long-nosed pliers.

Thread size d (x P)	Tang break-off tool for HELICOIL® plus Order no.	€
M 2	0158 040 0000	on request
M 2.5	0158 040 1000	on request
M 3	0158 040 1000	on request
M 3.5	0158 040 2000	on request
M 4	0158 040 2000	on request
M 5	0158 040 3000	on request
M 6	0158 040 3000	on request
M 7	0158 040 4000	on request
M 8	0158 040 4000	on request
M 8 x 1	0158 040 4000	on request
M 9	0158 040 4000	on request
M 10	0158 040 5000	on request
M 10 x 1	0158 040 5000	on request
M 10 x 1.25	0158 040 5000	on request
M 11	0158 040 5000	on request
M 12	0158 040 6000	on request

Extracting tools for HELICOIL® plus *and* HELICOIL®



Thread size d (x P)	Extracting tools for HELICOIL® plus Order no.	€
M 2	0180 300 0000	on request
M 2.5		
M 3		
M 3.5		
M 4	0180 301 0000	on request
M 5		
M 6		
M 7		
M 8		
M 8 x 1		
M 9		
M 10		
M 10 x 1		
M 10 x 1.25		
M 10 x 1.5		
M 10 x 2		
M 11	0180 302 0000	on request
M 12		
M 12 x 1		
M 12 x 1.25		
M 12 x 1.5		
M 14		
M 14 x 1		
M 14 x 1.25		
M 14 x 1.5		
M 16		
M 16 x 1.5		
M 18	0180 303 0000	on request
M 18 x 1.5		
M 18 x 2		
M 20		
M 20 x 1.5		
M 20 x 2		
M 22		
M 22 x 1.5		
M 22 x 2		
M 24	0180 304 0000	on request
M 24 x 1.5		
M 24 x 2		
M 26 x 1.5		
M 27		
M 27 x 1.5		
M 27 x 2		
M 28 x 1.5		
M 30		
M 30 x 1.5		
M 30 x 2		
M 33		
M 33 x 2		
M 36	0180 305 0000	on request
M 36 x 1.5		
M 36 x 2		
M 36 x 3		

HELICOIL® plus *and* HELICOIL® *design guidelines for thread technology*

Determination of the nominal length

Guideline values for determining the length of the HELICOIL® plus thread insert relative to the parent material and the property class, valid for temperatures of 20°C

Strength of the parent material	Screw property class								
Tensile strength R_m (N/mm²)	3.6 / 4.6	4.8 / 5.6	5.8 / 6.6	6.8 / 6.9	8.8	9.8	10.9	12.9	14.9
up to 100	1.5 d	1.5 d	2 d	2.5 d	3 d	3 d	–	–	–
> 100 – 150	1.5 d	1.5 d	2 d	2 d	2.5 d	2.5 d	2.5 d	2.5 d	3 d
> 150 – 200	1 d	1.5 d	1.5 d	1.5 d	2 d	2 d	2 d	2.5 d	2.5 d
> 200 – 250	1 d	1 d	1.5 d	1.5 d	1.5 d	1.5 d	2 d	2.5 d	2.5 d
> 250 – 300	1 d	1 d	1 d	1 d	1.5 d	1.5 d	1.5 d	2 d	2 d
> 300 – 350	1 d	1 d	1 d	1 d	1 d	1.5 d	1.5 d	1.5 d	2 d
> 350 – 400	1 d	1 d	1 d	1 d	1 d	1 d	1.5 d	1.5 d	1.5 d
> 400	1 d	1 d	1 d	1 d	1 d	1 d	1.5 d	1.5 d	1.5 d

The table for determination of the nominal length is valid for aluminium as well as materials with a ratio of $\frac{\text{shearing stress}}{\text{tensile strength } (R_m)} = 0.6 \text{ up to } 0.7$

Alloy of iron casting have a ratio of $\frac{\text{shearing stress}}{\text{tensile strength } (R_m)} = 0.8 \text{ up to } 1.4$ (Source VDI 2230)

The guideline values must be assessed so that the screw is always the weakest part of the connection.
Falling short of recommended nominal lengths is acceptable if proven by testing.
Intermediate lengths are also available.
By interpretating the screw connection that is stressed by temperature please take the changes of temperature dependant materials into consideration.

Minimum wall thickness

Assessment of the minimum wall thickness is mainly pre-determined by the individual operation data. The operation data in turn determine the strength of the material and the length of the thread. The quoted guideline value formula applies to aluminium, cast and wrought alloys and a HELICOIL® plus screw-in thread length of 1.5 d.

d = Nominal diameter of the holding thread
D_{HC} = Outside ∅
a = Remaining wall thickness

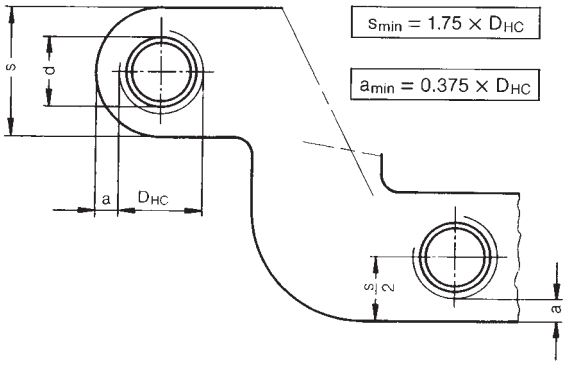

Graphic representation for the example M 10 x 15:

HELICOIL® plus thread insert, inserted

HELICOIL® plus thread insert with screw, inserted

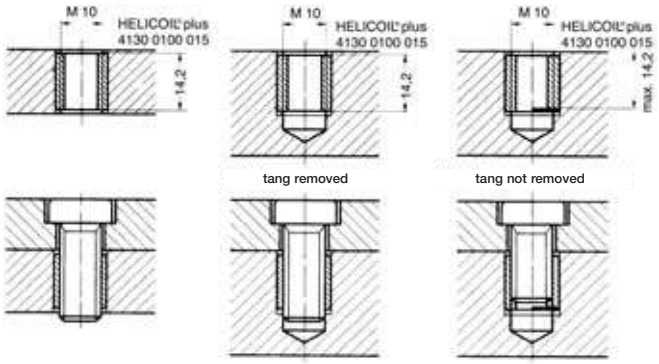

HELICOIL® plus *and* HELICOIL® *metric installation data*

The HELICOIL® holding thread without countersink provides excellent screw entry into the thread insert. In circumstances where countersinking cannot be dispensed, e.g. for sealing surfaces that cannot be further machined the following special rules apply:
Largest countersink Ø ≤
Holding thread outside diameter Ø D_{HC} min respectively D_{HC} + 0.1 mm.

- d = Nominal thread diameter
- P = Thread pitch
- D_{HC} = Holding thread outside diameter
- D_{1HC} = Core hole thread diameter
- t_1 = Minimum depth of core hole in acc. with DIN 76 Part 1 (normal case)
- t_2 = Nominal length of the thread insert and minimum length fo the holding thread
- t_3 = Maximum screw-in depth with tang not broken off
- t_5 = Distance of thread insert from the separating surface = 0.25 P, if t_2 complies with the minimum value given above.

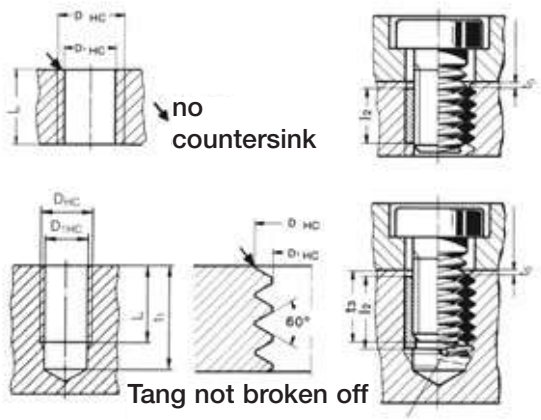

Note:
Thread insert is to be at least ¼ thread below the workpiece top surface and seated in fully cut threads (see figure below):

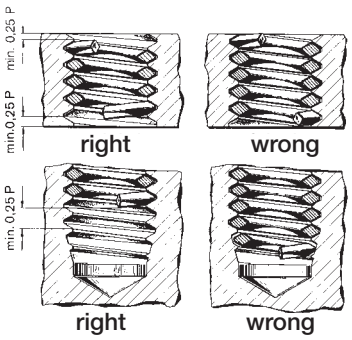

We can supply HELICOIL® internal thread limit gauges for testing the tapped internal thread on request.

Nominal thread Ø d	Pitch P	Rec. twist drill*) Ø	d_1 min.	d_1 max.	Core hole diameter $D_{1\,HC}$ min.	Core hole diameter $D_{1\,HC}$ max.	Core hole depth t_1 min. 1 d	Core hole depth t_1 min. 1.5 d	Core hole depth t_1 min. 2 d	Fully cut thread useable thread depth nominal length of insert L min. 1 d	Fully cut thread useable thread depth nominal length of insert L min. 1.5 d	Fully cut thread useable thread depth nominal length of insert L min. 2 d	Length of installed insert useable thread length l_2 1 d	Length of installed insert useable thread length l_2 1.5 d	Length of installed insert useable thread length l_2 2 d	Screw-in length for screw if driven tang is not removed t_3 max. 1 d	Screw-in length for screw if driven tang is not removed t_3 max. 1.5 d	Screw-in length for screw if driven tang is not removed t_3 max. 2 d	Outside Ø D_{HC} min.
M 2.5	0.45	2.60	3.3	3.5	2.60	2.70	5.1	6.35	7.6	2.50	3.75	5.00	2.1	3.3	4.6	2.1	3.3	4.6	3.08
M 3	0.5	3.20	3.8	4.0	3.11	3.22	5.8	7.3	8.8	3.00	4.50	6.00	2.5	4.0	5.5	2.5	4.0	5.5	3.65
M 3.5	0.6	3.70	4.55	4.75	3.63	3.76	6.9	8.65	10.4	3.50	5.25	7.00	2.9	4.7	6.4	2.9	4.7	6.4	4.28
M 4	0.7	4.20	5.05	5.25	4.15	4.29	7.8	9.8	11.8	4.00	6.00	8.00	3.3	5.3	7.3	3.3	5.3	7.3	4.91
M 5	0.8	5.20	6.35	6.6	5.17	5.33	9.2	11.7	14.2	5.00	7.50	10.00	4.2	6.7	9.2	4.2	6.7	9.2	6.04
M 6	1.0	6.30	7.6	7.85	6.22	6.41	11.1	14.1	17.1	6.00	9.00	12.00	5.0	8.0	11.0	5.0	8.0	11.0	7.30
M 7	1.0	7.30	8.65	8.9	7.22	7.41	12.1	15.6	19.1	7.00	10.50	14.00	6.0	9.5	13.0	6.0	9.5	13.0	8.30
M 8	1.25	8.40	9.85	10.1	8.27	8.48	14.2	18.2	22.2	8.00	12.00	16.00	6.8	10.8	14.4	6.8	10.8	14.8	9.62
M 8x1	1.0	8.30	9.85	10.1	8.22	8.41	13.1	17.1	21.1	8.00	12.00	16.00	7.0	11.0	15.0	7.0	11.0	15.0	9.30
M 9	1.25	9.40	10.85	11.1	9.27	9.48	15.2	19.7	24.2	9.00	13.50	18.00	7.8	12.3	16.8	7.8	12.3	16.8	10.62
M 9x1	1.0	9.30	10.85	11.1	9.22	9.41	14.1	18.6	23.1	9.00	13.50	18.00	8.0	12.5	17.0	8.0	12.5	17.0	10.30
M 10	1.5	10.50	12.1	12.5	10.32	10.56	17.3	22.3	27.3	10.00	15.00	20.00	8.5	13.5	18.5	8.5	13.5	18.5	11.95
M 10x1	1.0	10.25	12.1	12.5	10.22	10.41	15.1	20.1	25.1	10.00	15.00	20.00	9.0	14.0	19.0	9.0	14.0	19.0	11.30
M 10x1.25	1.25	10.40	12.1	12.5	10.27	10.48	16.2	21.2	26.2	10.00	15.00	20.00	8.8	13.8	18.8	8.8	13.8	18.8	11.62
M 11	1.5	11.50	13.1	13.5	11.33	11.56	18.3	23.8	29.3	11.00	16.50	22.00	9.5	15.0	20.5	9.5	15.0	20.5	12.95
M 11x1	1.0	11.25	13.1	13.5	11.22	11.41	16.1	21.6	27.1	11.00	16.50	22.00	10.0	15.5	21.0	10.0	15.5	21.0	12.30
M 12	1.75	12.50	14.4	14.8	12.38	12.64	20.3	26.3	32.3	12.00	18.00	24.00	10.3	16.3	22.3	10.3	16.3	22.3	14.27
M 12x1	1.0	12.25	14.4	14.8	12.22	12.41	17.1	23.1	29.1	12.00	18.00	24.00	11.0	17.0	23.0	11.0	17.0	23.0	13.30
M 12x1.25	1.25	12.25	14.4	14.8	12.27	12.48	18.2	24.2	30.2	12.00	18.00	24.00	10.8	16.8	22.8	10.8	16.8	22.8	13.62
M 12x1.5	1.5	12.50	14.4	14.8	12.32	12.56	19.3	25.3	31.3	12.00	18.00	24.00	10.5	16.5	22.5	10.5	16.5	22.5	13.95
M 14	2.0	14.50	16.8	17.2	14.43	14.73	23.3	30.3	37.3	14.00	21.00	28.00	12.0	19.0	26.0	12.0	19.0	26.0	16.60
M 14x1	1.0	14.25	16.8	17.2	14.22	14.41	19.1	26.1	33.1	14.00	21.00	28.00	13.0	20.0	27.0	13.0	20.0	27.0	15.30
M 14x1.5	1.5	14.50	16.8	17.2	14.38	14.56	21.3	28.3	35.3	14.00	21.00	28.00	12.5	19.5	26.5	12.5	19.5	26.5	15.95
M 15	2.0	15.50	18.3	18.8	15.43	15.73	24.3	31.8	39.3	15.00	22.50	30.00	13.0	20.5	28.0	13.0	20.5	28.0	17.60
M 15x1.5	1.5	15.50	17.9	18.4	15.33	15.56	22.3	29.8	37.3	15.00	22.50	30.00	13.5	21.0	28.5	13.5	21.0	28.5	16.95
M 16	2.0	16.50	19.0	19.4	16.43	16.73	25.3	33.3	41.3	16.00	24.00	32.00	14.0	22.0	30.0	14.0	22.0	30.0	18.60
M 16x1.5	1.5	16.50	19.0	19.4	16.32	15.56	23.3	31.3	39.3	16.00	24.00	32.00	14.5	22.5	30.5	14.5	22.5	30.5	17.95
M 18	2.5	18.75	21.5	22.0	18.54	18.90	29.2	38.2	47.2	18.00	27.00	36.00	15.5	24.5	33.5	15.5	24.5	33.5	21.25
M 18x1.5	1.5	18.50	21.5	22.0	18.32	18.56	25.3	34.3	43.3	18.00	27.00	36.00	16.5	25.5	34.5	16.5	25.5	34.5	19.95
M 18x2	2.0	18.50	21.5	22.0	18.43	18.72	27.3	36.3	45.3	18.00	27.00	36.00	16.0	25.0	34.0	16.0	25.0	34.0	20.60
M 20	2.5	20.75	23.7	24.2	20.54	20.90	31.2	41.2	51.2	20.00	30.00	40.00	17.5	27.5	37.5	17.5	27.5	37.5	23.25
M 20x1.5	1.5	20.50	23.7	24.2	20.32	20.56	27.3	37.3	47.3	20.00	30.00	40.00	18.5	28.5	38.5	18.5	28.5	38.5	21.95
M 20x2	2.0	20.50	23.7	24.2	20.43	20.73	29.3	39.3	49.3	20.00	30.00	40.00	18.0	28.0	38.0	18.0	28.0	38.0	22.60
M 22	2.5	22.75	26.3	26.8	22.54	22.90	33.2	44.2	55.2	22.00	33.00	44.00	19.5	30.5	41.5	19.5	30.5	41.5	25.25
M 22x1.5	1.5	22.50	26.3	26.8	22.32	22.56	29.3	40.3	–	22.00	33.00	–	20.5	31.5	–	20.5	31.5	–	23.95
M 22x2	2.0	22.50	26.3	26.8	22.43	22.73	31.3	42.3	53.3	22.00	33.00	44.00	20.0	31.0	42.0	20.0	31.0	42.0	24.60
M 24	3.0	24.75	28.6	29.1	24.65	25.05	37.1	49.1	61.1	24.00	36.00	48.00	21.0	33.0	45.0	21.0	33.0	45.0	27.90
M 24x1.5	1.5	24.50	28.6	29.1	24.33	24.56	31.3	43.3	–	24.00	36.00	–	22.5	34.5	–	22.5	34.5	–	25.95
M 24x2	2.0	24.50	28.6	29.1	24.43	24.73	33.3	45.3	57.3	24.00	36.00	48.00	22.0	34.0	46.0	22.0	34.0	46.0	26.60
M 26x1.5	1.5	26.50	31.0	31.5	26.33	26.56	33.3	46.3	–	26.00	39.00	–	24.5	37.5	–	24.5	37.5	–	27.95
M 27	3.0	27.75	32.2	32.7	27.65	28.05	40.1	53.6	67.1	27.00	40.50	54.00	24.0	37.5	51.0	24.0	37.5	51.0	30.90
M 27x1.5	1.5	27.50	32.2	32.7	27.33	27.56	34.3	47.8	–	27.00	40.50	–	25.5	39.0	–	25.5	39.0	–	28.95
M 27x2	2.0	27.50	32.2	32.7	27.43	27.73	36.3	49.8	–	27.00	40.50	–	25.0	38.5	–	25.0	38.5	–	29.60
M 28x1.5	1.5	28.50	33.1	33.6	28.33	28.56	35.3	49.3	–	28.00	42.00	–	26.5	40.5	–	26.5	40.5	–	29.95
M 30	3.5	31.00	35.2	35.7	30.76	31.21	45.2	60.2	75.2	30.00	45.00	60.00	26.5	41.5	56.5	26.5	41.5	56.5	34.55
M 30x1.5	1.5	30.50	35.2	35.7	30.33	30.56	37.3	52.3	–	30.00	45.00	–	28.5	43.5	–	28.5	43.5	–	31.95
M 30x2	2.0	30.50	35.2	35.7	30.43	30.73	39.3	54.3	–	30.00	45.00	–	28.0	43.0	–	28.0	43.0	–	32.60
M 33	3.5	34.00	38.3	38.8	33.76	34.21	48.2	64.7	81.2	33.00	49.50	66.00	29.5	46.0	62.5	29.5	46.0	62.5	37.55
M 33x2	2.0	33.50	38.3	38.8	33.43	33.73	42.3	58.8	–	33.00	49.50	–	31.0	47.5	–	31.0	47.5	–	35.60
M 33x3	3.0	34.00	38.3	38.8	33.65	34.05	46.1	62.6	–	33.00	49.50	–	30.0	46.5	–	30.0	46.5	–	36.90
M 36	4.0	37.00	42.1	42.6	36.87	37.34	52.8	70.8	88.8	36.00	54.00	72.00	32.0	50.0	68.0	32.0	50.0	68.0	41.20
M 36 x 1.5	1.5	36.50	42.1	42.6	36.32	36.56	43.3	61.3	79.3	36.00	54.00	72.00	35.2	53.2	71.2	35.2	53.2	71.2	37.95
M 36x2	2.0	36.50	42.1	42.6	36.43	36.73	45.3	63.3	–	36.00	54.00	–	34.0	52.0	–	34.0	52.0	–	38.60
M 36x3	3.0	37.00	42.1	42.6	36.65	37.05	49.1	67.0	–	36.00	54.00	–	33.0	51.0	–	33.0	51.0	–	39.90

Spark plug thread							Nominal length of insert (mm)															
M 10x1	1.0	10.25	12.1	12.5	10.22	10.41	–	–	–	10.0	–	–	17.5	–	9.0	–	–	–	–	9.5	–	–	11.80
M 12x1.25	1.25	12.25	14.4	14.8	12.27	12.48	–	–	–	–	16.0	–	–	24.0	–	–	–	–	22.8	–	–	23.4	13.62
M 14x1.25	1.25	14.25	16.8	17.2	14.27	14.48	–	–	–	8.4	–	–	12.4	16.4	7.2	–	–	11.2	15.2	–	–	–	15.62

*) The recommended twist drill diameters are for guidance only. It is known that the accuracy of the core Ø after tapping can vary widely and depends on a number of well-known factors that must be taken into account. It is important that the thread diameter after tapping complies with the recommended limiting value D_1 HC.

HELICOIL® plus *and* HELICOIL® *imperial installation data*

Nominal thread Ø d	Pitch P	Rec. twist drill*) Ø	Outer Ø of thread insert before inst. d_1 min.	d_1 max.	Core hole diameter $D_{1\ HC}$ min.	$D_{1\ HC}$ max.	Core hole depth t_1 min. 1d	1.5d	2d	2.5d	Fully cut thread useable thread depth nominal length of insert L min. 1d	1.5d	2d	2.5d	Length of installed insert useable thread length l_2 1d	1.5d	2d	2.5d	Screw-in length for screw if driving tang is not removed t_3 max. 1d	1.5d	2d	2.5d	Outside Ø D_{HC} min.
UNC/NC = American national coarse threads																							
2-56	0.435	2.4	2.7	2.9	2.28	2.44	4.8	5.9	7.0	8.1	2.2	3.3	4.4	5.5	1.8	2.9	3.9	5.0	1.8	2.9	3.9	5.0	2.84
4-40	0.635	3.1	3.6	4.0	3.00	3.15	6.3	7.7	9.2	10.6	2.9	4.3	5.8	7.2	2.5	3.9	5.4	6.8	2.5	3.9	5.4	6.8	3.67
5-40	0.635	3.4	4.0	4.4	3.33	3.48	6.6	8.2	9.8	11.1	3.2	4.8	6.4	7.9	2.8	4.3	6.0	7.5	2.8	4.3	6.0	7.5	4.00
6-32	0.794	3.8	4.5	4.9	3.68	3.89	7.7	9.5	11.2	13.2	3.5	5.3	7.0	8.8	3.1	4.9	6.6	8.4	3.1	4.9	6.6	8.4	4.54
8-32	0.794	4.4	5.2	5.6	4.34	4.52	8.4	10.5	12.5	14.7	4.2	6.3	8.3	10.5	3.8	5.9	8.0	10.1	3.8	5.9	8.0	10.1	5.20
10-24	1.058	5.2	6.2	6.6	5.06	5.28	9.9	12.3	14.7	17.2	4.8	7.2	9.6	12.1	4.3	6.7	9.1	11.6	4.3	6.7	9.1	11.6	6.20
12-24	1.058	5.8	6.8	7.2	5.72	5.92	10.6	13.3	16.1	18.8	5.5	8.2	11.0	13.7	5.0	7.7	10.5	13.2	5.0	7.7	10.5	13.2	6.86
1/4"-20	1.270	6.7	8.0	8.4	6.62	6.86	12.6	15.7	18.9	22.1	6.4	9.5	12.7	15.9	5.8	8.9	12.1	15.3	5.8	8.9	12.1	15.3	8.00
5/16"-18	1.411	8.4	9.7	10.2	8.24	8.49	15.2	19.2	23.2	27.1	7.9	11.9	15.9	19.8	7.2	11.2	15.2	19.1	7.2	11.2	15.2	19.1	9.77
3/8"-16	1.588	10.0	11.5	12.0	9.89	10.12	16.8	21.6	26.4	31.1	9.5	14.3	19.1	23.8	8.7	13.5	18.3	23.0	8.7	13.5	18.3	23.0	11.59
7/16"-14	1.814	11.6	13.4	14.0	11.51	11.78	19.4	25.0	30.5	36.1	11.1	16.7	22.2	27.8	10.2	15.8	21.3	26.9	10.2	15.8	21.3	26.9	13.47
1/2"-13	1.954	13.2	15.2	15.8	13.12	13.40	22.0	28.4	34.7	41.1	12.7	19.1	25.4	31.8	11.7	18.1	24.4	30.8	11.7	18.1	24.4	30.8	15.24
9/16"-12	2.117	14.9	17.0	17.6	14.75	15.03	23.6	30.8	37.9	45.0	14.3	21.5	28.6	35.7	13.2	20.4	27.5	34.6	13.2	20.4	27.5	34.6	17.04
5/8"-11	2.309	16.6	18.9	19.5	16.38	16.68	27.1	35.0	43.0	50.9	15.9	23.8	31.8	39.7	14.7	22.6	30.6	38.5	14.7	22.6	30.6	38.5	18.88
3/4"-10	2.540	19.7	22.4	23.0	19.60	19.91	30.3	39.8	49.3	58.8	19.1	28.6	38.1	47.6	17.8	27.3	36.8	46.3	17.8	27.3	36.8	46.3	22.35
7/8"- 9	2.822	23.0	26.0	26.7	22.84	23.18	35.3	46.4	57.6	68.7	22.2	33.3	44.5	55.6	20.8	31.9	43.1	54.2	20.8	31.9	43.1	54.2	25.89
1"- 8	3.175	26.2	29.6	30.4	26.09	26.47	38.5	51.2	63.9	76.6	25.4	38.1	50.8	63.5	23.8	36.5	49.2	61.9	23.8	36.5	49.2	61.9	29.53
1 1/8"- 7	3.629	29.5	33.4	34.4	29.36	29.74	43.8	58.1	72.4	–	28.6	42.9	57.2	–	26.8	41.1	55.4	–	26.8	41.1	55.4	–	33.29
1 1/4"- 7	3.629	33.0	36.7	37.7	32.54	32.92	47.0	62.8	78.7	–	31.8	47.6	63.5	–	30.0	45.8	61.7	–	30.0	45.8	61.7	–	36.46
1 3/8"- 6	4.234	36.0	40.6	41.7	35.84	36.35	51.7	69.2	86.7	–	34.9	52.4	69.9	–	32.8	50.3	67.8	–	32.8	50.3	67.8	–	40.42
1 1/2"- 6	4.234	39.5	43.9	45.0	39.02	39.53	54.9	74.0	93.0	–	38.1	57.2	76.2	–	36.0	55.1	74.1	–	36.0	55.1	74.1	–	43.60
UN/NF = American national fine threads																							
4-48	0.529	3.0	3.7	4.1	2.97	3.12	5.6	7.1	8.5	9.9	2.8	4.3	5.7	7.1	2.5	4.0	5.4	6.7	2.5	4.0	5.4	6.7	3.53
6-40	0.635	3.8	4.5	4.9	3.66	3.81	6.9	8.7	10.4	12.2	3.5	5.3	7.0	8.8	3.1	4.9	6.6	8.4	3.1	4.9	6.6	8.4	4.33
8-36	0.706	4.4	5.3	5.7	4.32	4.47	8.0	10.1	12.1	14.3	4.2	6.3	8.3	10.5	3.8	5.9	7.9	10.1	3.8	5.9	7.9	10.1	5.08
10-32	0.794	5.1	6.1	6.5	5.00	5.16	9.0	11.4	13.8	16.3	4.8	7.2	9.6	12.1	4.4	6.8	9.2	11.7	4.4	6.8	9.2	11.7	5.86
1/4"-28	0.907	6.7	7.8	8.3	6.55	6.72	11.5	14.6	17.8	21.0	6.4	9.5	12.7	15.9	5.9	9.0	12.2	15.4	5.9	9.0	12.2	15.4	7.53
5/16"-24	1.058	8.2	9.7	10.2	8.17	8.35	13.0	17.0	21.0	24.9	7.9	11.9	15.9	19.8	7.4	11.4	15.4	19.3	7.4	11.4	15.4	19.3	9.31
3/8"-24	1.058	9.8	11.4	11.9	9.75	9.93	14.6	19.4	24.2	28.9	9.5	14.3	19.1	23.8	9.0	13.8	18.6	23.3	9.0	13.8	18.6	23.3	10.90
7/16"-20	1.270	11.5	13.4	13.9	11.39	11.59	17.3	22.9	28.4	34.0	11.1	16.7	22.2	27.8	10.5	16.1	21.6	27.2	10.5	16.1	21.6	27.2	12.76
1/2"-20	1.270	13.1	15.1	15.7	12.97	13.16	18.9	25.3	31.6	38.0	12.7	19.1	25.4	31.8	12.1	18.5	24.8	31.2	12.1	18.5	24.8	31.2	14.35
9/16"-18	1.411	14.7	16.9	17.6	14.59	14.79	21.6	28.8	35.9	43.0	14.3	21.5	28.6	35.7	13.6	20.8	27.9	35.0	13.6	20.8	27.9	35.0	16.12
5/8"-18	1.411	16.3	18.6	19.3	16.18	16.38	23.2	31.1	39.1	47.0	15.9	23.8	31.8	39.7	15.2	23.1	31.1	39.0	15.2	23.1	31.1	39.0	17.71
3/4"-16	1.588	19.5	22.2	22.9	19.39	19.60	26.4	35.9	45.4	55.0	19.1	28.6	38.1	47.7	18.3	27.8	37.3	46.9	18.3	27.8	37.3	46.9	21.11
7/8"-14	1.814	22.7	26.0	26.7	22.62	22.84	30.5	41.6	52.8	63.9	22.2	33.3	44.5	55.6	21.3	32.4	43.6	54.7	21.3	32.4	43.6	54.7	24.58
1"-1/4"	1.814	26.0	29.4	30.1	25.86	26.11	33.7	46.4	59.1	71.8	25.4	38.1	50.8	63.5	24.5	37.2	49.9	62.6	24.5	37.2	49.9	62.6	27.76
1"-1/2"	2.117	26.0	29.7	30.4	25.86	26.11	34.7	47.4	60.1	72.8	25.4	38.1	50.8	63.5	24.3	37.0	49.7	62.4	24.3	37.0	49.7	62.4	28.15
BSW = British standard coarse threads (Whitworth thread)																							
3/16"-24	1.058	5.1	6.1	6.5	4.98	5.13	9.9	12.2	14.7	17.0	4.8	7.1	9.6	11.9	4.3	6.6	9.1	11.4	4.3	6.6	9.1	11.4	6.01
1/4"-20	1.270	6.7	7.9	8.4	6.63	6.78	12.6	15.7	18.9	26.1	6.4	9.5	12.7	15.9	5.8	8.9	12.1	15.3	5.8	8.9	12.1	15.3	7.84
5/16"-18	1.411	8.5	9.7	10.2	8.33	8.48	15.2	19.2	23.2	27.1	7.9	11.9	15.9	19.8	7.2	11.2	15.2	19.1	7.2	11.2	15.2	19.1	9.59
3/8"-16	1.588	10.0	11.5	12.0	9.91	10.11	16.8	21.6	26.4	31.1	9.5	14.3	19.1	23.8	8.7	13.5	18.3	23.0	8.7	13.5	18.3	23.0	11.39
7/16"-14	1.814	11.6	13.5	14.0	11.51	11.76	19.4	25.0	30.5	36.1	11.1	16.7	22.2	27.8	10.2	15.8	21.3	26.9	10.2	15.8	21.3	26.9	13.24
1/2"-12	2.117	13.2	15.4	16.0	13.08	13.34	22.0	28.4	34.7	41.1	12.7	19.1	25.4	31.8	11.6	18.0	24.3	30.7	11.6	18.0	24.3	30.7	15.17
9/16"-12	2.117	14.8	17.0	17.6	14.68	14.94	23.6	30.8	37.9	45.0	14.3	21.5	28.6	35.7	13.2	20.4	27.5	34.6	13.2	20.4	27.5	34.6	16.76
5/8"-11	2.309	16.7	18.9	19.5	16.59	16.84	27.1	35.0	43.0	50.9	15.9	23.8	31.8	39.7	14.7	22.6	30.6	38.5	14.7	22.6	30.6	38.5	18.57
3/4"-10	2.540	20.0	22.4	23.0	19.84	20.09	30.3	39.8	49.3	58.8	19.1	28.6	38.1	47.6	17.8	27.3	36.8	46.3	17.8	27.3	36.8	46.3	22.02
7/8"- 9	2.822	23.0	26.0	26.7	23.01	23.27	35.3	46.4	57.6	68.7	22.2	33.3	44.5	55.6	20.8	31.9	43.1	54.2	20.8	31.9	43.1	54.2	25.52
1"- 8	3.175	26.5	27.7	30.4	26.19	26.52	38.5	51.2	63.9	76.6	25.4	38.1	50.8	63.5	23.8	36.5	49.2	61.9	23.8	36.5	49.2	61.9	29.10
1 1/8"- 7	3.629	30.0	33.5	34.4	29.74	30.12	43.8	58.1	72.4	–	28.6	42.9	57.2	–	26.8	41.1	55.4	–	26.8	41.1	55.4	–	32.80
1 1/4"- 7	3.629	33.0	36.7	37.7	32.92	33.30	47.0	62.8	78.7	–	31.8	47.6	63.5	–	30.0	45.8	61.7	–	30.0	45.8	61.7	–	35.97
1 1/2"- 6	4.233	39.5	43.9	45.1	39.27	39.90	54.9	74.0	93.0	–	38.1	57.2	76.2	–	36.0	55.1	74.1	–	36.0	55.1	74.1	–	43.02
BSF = British standard fine threads																							
9/32"-26	0.977	7.4	8.7	9.2	7.32	7.49	12.2	15.8	19.4	23.0	7.1	10.7	14.3	17.9	6.6	10.2	13.8	17.4	6.6	10.2	13.8	17.4	8.31
5/16"-22	1.155	8.3	9.8	10.3	8.20	8.38	14.1	18.1	22.1	26.0	7.9	11.9	15.9	19.8	7.3	11.3	15.3	19.2	7.3	11.3	15.3	19.2	9.30
3/8"-20	1.270	9.9	11.6	12.1	9.78	9.96	15.7	20.5	25.3	30.0	9.5	14.3	19.1	23.8	8.8	13.6	18.4	23.1	8.8	13.6	18.4	23.1	11.02
7/16"-18	1.411	11.5	13.6	14.1	11.43	11.63	18.4	24.0	29.5	35.1	11.1	16.7	22.2	27.8	10.4	16.0	21.5	27.1	10.4	16.0	21.5	27.1	12.78
1/2"-16	1.588	13.1	15.5	16.0	13.03	13.26	20.0	26.4	32.7	39.1	12.7	19.1	25.4	31.8	11.9	18.3	24.6	31.0	11.9	18.3	24.6	31.0	14.57
9/16"-16	1.588	14.8	17.2	17.8	14.66	14.88	21.6	28.8	35.9	43.0	14.3	21.5	28.6	35.7	13.5	20.7	27.8	34.9	13.5	20.7	27.8	34.9	16.16
5/8"-14	1.814	16.4	19.1	19.7	16.26	16.49	24.2	32.1	40.1	48.0	15.9	23.8	31.8	39.7	15.0	22.9	30.9	38.8	15.0	22.9	30.9	38.8	18.01
3/4"-12	2.117	19.5	22.9	23.5	19.43	19.69	28.4	37.9	47.4	56.9	19.1	28.6	38.1	47.6	18.0	27.5	37.0	46.5	18.0	27.5	37.0	46.5	21.53
7/8"-11	2.309	22.7	26.5	27.3	22.61	22.86	33.4	44.5	55.7	66.8	22.2	33.3	44.5	55.6	21.0	32.1	43.3	54.4	21.0	32.1	43.3	54.4	24.94
1"-10	2.540	26.5	30.2	31.0	26.19	26.52	36.6	49.3	62.0	74.7	25.4	38.1	50.8	63.5	24.1	36.8	49.5	62.2	24.1	36.8	49.5	62.6	28.38
BSP = British Standard pipe thread · G = ISO 228/1 pipe thread																							
G 1/8"	0.907	10.0	11.5	12.0	9.91	10.16	8.3	9.9	11.5	13.0	3.2	4.8	6.4	7.9	2.7	4.3	5.9	7.4	2.7	4.3	5.9	7.4	10.82
G 1/4"	1.337	13.6	15.7	16.2	13.46	13.72	12.6	15.7	18.9	22.1	6.4	9.5	12.7	15.9	5.7	8.8	12.0	15.2	5.7	8.8	12.0	15.2	14.74
G 3/8"	1.337	17.1	19.5	20.0	17.02	17.27	15.7	20.5	25.3	30.0	9.5	14.3	19.1	23.8	8.8	13.6	18.4	23.1	8.8	13.6	18.4	23.1	18.25
G 1/2"	1.814	21.5	24.6	25.2	21.34	21.59	21.0	27.4	33.7	40.1	12.7	19.1	25.4	31.8	11.7	18.1	24.4	30.8	11.7	18.1	24.6	30.8	23.09
G 5/8"	1.814	23.4	26.7	27.4	23.24	23.55	24.2	32.1	40.1	48.0	15.9	23.8	31.8	39.7	14.9	22.8	30.8	38.7	14.9	22.8	30.8	38.7	25.05
G 3/4"	1.814	27.0	30.5	31.2	26.75	27.08	27.4	36.9	46.4	55.9	19.1	28.6	38.1	47.6	18.1	27.6	37.1	46.6	18.1	27.6	37.1	46.6	28.59
G 7/8"	1.814	30.6	34.6	35.3	30.48	30.81	30.5	41.6	52.8	–	22.2	33.3	44.5	–	21.2	32.3	43.5	–	21.2	32.3	43.5	–	32.35
G 1"	2.309	33.7	38.4	39.2	33.53	33.91	36.6	49.3	62.0	–	25.4	38.1	50.8	–	24.3	37.0	49.7	–	24.3	37.0	49.7	–	35.96

HELICOIL® plus TWINSERT *thread inserts for metals*

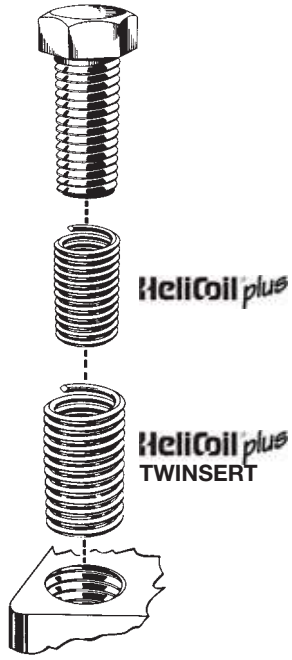

Trouble-free thread correction and repair

Use and description

When you need to repair internally threaded holes that have widespread cracks, are off-centre or over-sized, and large-diameter screws cannot be used due to the physical characteristics of the workpiece, HELICOIL® plus TWINSERT threat inserts are a repair solution with “a HELICOIL® plus inside a HELICOIL® plus”.
TWINSERT consists of two HELICOIL® plus thread inserts. The outer insert is always a HELICOIL® plus free running type, whilst the inner insert can be a HELICOIL® plus free running or a HELICOIL® plus SCREWLOCK type with 1.5 or 2.0 d of lengths.
Note: Since the inner HELICOIL® plus is a standard length, the HELICOIL® plus TWINSERT is one thread longer, which must be taken into account for T4, the thread length of the holding thread. If this T4 thread length cannot be achieved on the workpiece, both HELICOIL® plus thread inserts must bei shortened accordingly.
The standard material is X5 Cr Ni 1810 (1.4301). Other materials and surface finishes are available on request.

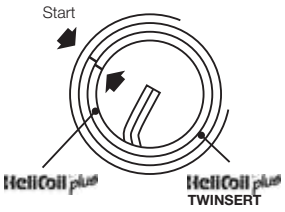

Available sizes

HELICOIL® plus TWINSERT repair kits are available for ISO metric coarse threads ranging from M 2 to M 16, for ISO metric fine threads ranging from M 8 x 1 to M16 x 1.5, all with nominal lengths of 1.5 d and 2.0 d (see tables on p. 39).
Sizes larger than M 16 and imperial sizes on request.

Kit contents

Every HELICOIL® plus TWINSERT repair kit contains the number of HELICOIL® plus pairs shown in the tables on p. 39, a TWINSERT tap for installing the outer insert, separate insertion spindles (insertion tools) for the inner and outer inserts and a tang break-off tool. For sizes ≥ M 12, tangs are designed to be removed using long-nosed pliers. For sizes ≤ M 8, the HELICOIL® plus TWINSERT repair kit contains a suitable twist drill.

Installation procedure

- Drill core hole. For core hole diameter and other dimensions please see tables on p. 39.
- Cut threads using the TWINSERT tap (for outer HELICOIL® plus thread insert).
- Install outer HELICOIL® plus thread insert using the TWINSERT insertion tool approx. 1/4 – 1/2 turn below the top surface of the workpiece.
- Remove the tang from the outer HELICOIL® plus using the tang break-off tool.
- Install the inner HELICOIL® plus using the installation tool. Its end has to be flush with the outer HELICOIL® plus TWINSERT (see drawing).
- Breack tang off the inner HELICOIL® plus thread insert.

HELICOIL® plus TWINSERT *thread inserts for metals*

Nominal thread Ø d*	TWINSERT Nominal length* 1.5 x d						
	Outer HELICOIL® plus		Inner HELICOIL® plus Standard type		Repair kit		
	Nominal length T_2	Order no.①	free running Order no.①	screwlock Order no.①	Contents Pair	free running Order no.①	screwlock Order no.①
ISO metric threads, coarse threads							
M2	3.40	4115 002 0006	4130 002 0003	4132 002 0003	20	4185 902 0941	4185 902 0946
M2.5	4.20	4115 025 0006	4130 025 0375	4132 025 0375	20	4185 925 0941	4185 925 0946
M3	5.00	4115 003 0006	4130 003 0045	4132 003 0045	20	4185 903 0941	4185 903 0946
M3.5	5.85	4115 035 0006	4130 035 0053	4132 035 0053	20	4185 935 0941	4185 935 0946
M4	6.70	4115 004 0006	4130 004 0006	4132 004 0006	20	4185 904 0941	4185 904 0946
M5	8.30	4115 005 0006	4130 005 0075	4132 005 0075	20	4185 905 0941	4185 905 0946
M6	10.00	4115 006 0006	4130 006 0009	4132 006 0009	20	4185 906 0941	4185 906 0946
M8	13.25	4115 008 0006	4130 008 0012	4132 008 0012	10	4185 908 0941	4185 908 0946
M10	16.50	4115 010 0006	4130 010 0015	4132 010 0015	10	4185 910 0941	4185 910 0946
M12	19.75	4115 012 0006	4130 012 0018	4132 012 0018	10	4185 912 0941	4185 912 0946
M14	23.00	4115 014 0006	4130 014 0021	4132 014 0021	10	4185 914 0941	4185 914 0946
M16	26.00	4115 016 0006	4130 016 0024	4132 016 0024	10	4185 916 0941	4185 916 0946
ISO metric threads, fine threads							
M8x1	13.00	4115 008 3006	4130 008 3012	4132 008 3012	10	4185 908 3941	4185 908 3946
M10x1	16.00	4115 010 3006	4130 010 3015	4132 010 3015	10	4185 910 3941	4185 910 3946
M10x1.25	16.25	4115 010 9006	4130 010 9015	4132 010 9015	10	4185 910 9941	4185 910 9946
M12x1	19.00	4115 012 3006	4130 012 3018	4132 012 3018	10	4185 912 3941	4185 912 3946
M12x1.25	19.25	4115 012 9006	4130 012 9018	4132 012 9018	10	4185 912 9941	4185 912 9946
M12x1.5	19.50	4115 012 4006	4130 012 4018	4132 012 4018	10	4185 912 4941	4185 912 4946
M14x1.25	13.65	4115 014 9006	4130 014 9124	4132 014 9124	10	4185 914 9941	4185 914 9946
M14x1.5	22.50	4115 014 4006	4130 014 4021	4132 014 4021	10	4185 914 4941	4185 914 4946
M16x1.5	25.50	4115 016 4006	4130 016 4024	4132 016 4024	10	4185 916 4941	4185 916 4946

Nominal thread Ø d*	TWINSERT Nominal length* 2.0 x d						
	Outer HELICOIL® plus		Inner HELICOIL® plus Standard type		Repair kit		
	Nominal length T_2	Order no.①	free running Order no.①	screwlock Order no.①	Contents Pair	free running Order no.①	screwlock Order no.①
ISO metric threads, coarse threads							
M2	4.40	4115 002 0008	4130 002 0004	4132 002 0004	20	4185 902 0942	4185 902 0947
M2.5	5.45	4115 025 0008	4130 025 0005	4132 025 0005	20	4185 925 0942	4185 925 0947
M3	6.50	4115 003 0008	4130 003 0006	4132 003 0006	20	4185 903 0942	4185 903 0947
M3.5	7.60	4115 035 0008	4130 035 0007	4132 035 0007	20	4185 935 0942	4185 935 0947
M4	8.70	4115 004 0008	4130 004 0008	4132 004 0008	20	4185 904 0942	4185 904 0947
M5	10.80	4115 005 0008	4130 005 0010	4132 005 0010	20	4185 905 0942	4185 905 0947
M6	13.00	4115 006 0008	4130 006 0012	4132 006 0012	20	4185 906 0942	4185 906 0947
M8	17.25	4115 008 0008	4130 008 0016	4132 008 0016	10	4185 908 0942	4185 908 0947
M10	21.50	4115 010 0008	4130 010 0020	4132 010 0020	10	4185 910 0942	4185 910 0947
M12	25.75	4115 012 0008	4130 012 0024	4132 012 0024	10	4185 912 0942	4185 912 0947
M14	30.00	4115 014 0008	4130 014 0028	4132 014 0028	10	4185 914 0942	4185 914 0947
M16	38.00	4115 016 0008	4130 016 0032	4132 016 0032	10	4185 916 0942	4185 916 0947
ISO metric threads, fine threads							
M8x1	17.00	4115 008 3008	4130 008 3016	4132 008 3016	10	4185 908 3942	4185 908 3947
M10x1	21.00	4115 010 3008	4130 010 3020	4132 010 3020	10	4185 910 3942	4185 910 3947
M10x1.25	21.25	4115 010 9008	4130 010 9020	4132 010 9020	10	4185 910 9942	4185 910 9947
M12x1	25.00	4115 012 3008	4130 012 3024	4132 012 3024	10	4185 912 3942	4185 912 3947
M12x1.25	25.25	4115 012 9008	4130 012 9024	4132 012 9024	10	4185 912 9942	4185 912 9947
M12x1.5	25.50	4115 012 4008	4130 012 4024	4132 012 4024	10	4185 912 4942	4185 912 4947
M14x1.25	15.65	4115 014 9008	4130 014 9144	4132 014 9144	10	4185 914 9942	4185 914 9947
M14x1.5	29.50	4115 014 4008	4130 014 4028	4132 014 4028	10	4185 914 4942	4185 914 4947
M16x1.5	33.50	4115 016 4008	4130 016 4032	4132 016 4032	10	4185 916 4942	4185 916 4947

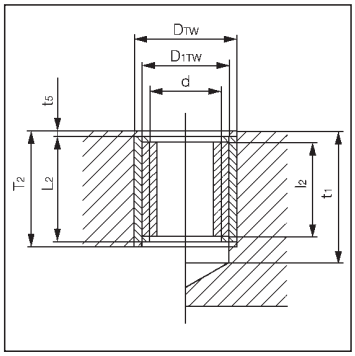

d = Thread nominal diameter (inner HELICOIL® plus)
l_2 = Length of inner screw thread insert (in installed position)
W = Number of threads prior to installaton (outer HELICOIL® plus TWINSERT)
D_{TW} = Outside diameter of holding thread
D_{1TW} = Thread core diameter of holding thread
t_1 = Minimum depth of core hole see DIN 76 Part 1
t_5 = Distance of thread insert from separating surface = 0.25 P, if T_2 is equal to the minimum value given above
L_2 = Length of the outer thread insert (in installed position)
T_2 = Minimum length of holding thread for bind holes and through holes = T_2 = nominal length of the outer thread insert (recommended value)

① **Prices on request**

* Other sizes and lengths on request
** Remove tang with long-nosed pliers

Technical data – Table of dimensions

Nominal thread Ø d*	Outer HELICOIL® plus				Dimensions for holding thread				Tools for: outer HELICOIL® plus			inner HELICOIL® plus
	1.5 d		2.0 d		Outside Ø D_{TW} max.	Rec. twist drill Ø	Core hole Ø D_{1TW} min.	max.	Tap Order no.①	Insertion spindle Bestell-Nr.①	Tang break-off tool Order no.①	Insertion spindle Order no.①
	W	L_2	W	L_2								
ISO metric threads, coarse threads												
M2	5.9	2.4	7.9	3.2	3.60	2.7	2.61	2.70	0140 902 0490	4150 902 0490	0158 040 0000	4160 230 2020
M2.5	7.0	3.8	9.3	5.1	3.68	3.2	3.18	3.28	0140 925 0490	4150 925 0490	0158 040 1000	4160 232 5020
M3	7.6	4.5	10.2	6.0	4.31	3.8	3.76	3.87	0140 903 0490	4150 903 0490	0158 040 1000	4160 230 3020
M3.5	7.5	5.3	10.0	7.0	5.07	4.5	4.41	4.54	0140 935 0490	4150 935 0490	0158 040 2000	4160 233 5020
M4	7.2	6.0	9.7	8.0	5.83	5.1	5.06	5.20	0140 904 0490	4150 904 0490	0158 040 2000	4160 230 4020
M5	8.0	7.5	10.7	10.0	7.08	6.3	6.21	6.37	0140 905 0490	4150 905 0490	0158 040 3000	4160 230 5020
M6	7.9	9.0	10.6	12.0	8.59	7.6	7.52	7.71	0140 906 0490	4150 906 0490	0158 040 3000	4160 230 6020
M8	8.4	12.1	11.6	16.1	11.23	10.0	9.90	10.11	0140 908 0490	4150 908 0490	0158 040 4000	4160 250 8020
M10	9.1	15.0	12.2	20.0	13.86	12.5	12.27	12.51	0140 910 0490	4150 910 0490	0158 040 5000	4160 251 0020
M12	9.4	18.1	12.7	24.1	16.49	15.0	14.65	14.92	0140 912 0490	4150 912 0490	0158 040 6000	4160 251 2020
M14	9.8	21.0	13.0	28.0	19.12	17.25	17.03	17.25	0140 914 0490	4150 914 0490	**	4160 251 4020
M16	11.1	24.0	14.8	32.0	21.12	19.25	19.03	19.25	0140 916 0490	4150 916 0490	**	4160 251 6020
ISO metric threads, fine threads												
M8x1	10.5	12.0	14.0	16.0	10.59	9.6	9.52	9.71	0140 908 3490	4150 908 3490	0158 040 4000	4160 250 8320
M10x1	13.0	15.0	17.5	20.0	12.59	11.8	11.52	11.71	0140 910 3490	4150 910 3490	0158 040 5000	4160 251 0320
M10x1.25	10.7	15.1	14.0	20.1	13.23	12.0	11.90	12.11	0140 910 9490	4150 910 9490	0158 040 5000	4160 251 0920
M12x1	15.5	18.0	20.5	24.0	14.60	13.5	13.52	13.50	0140 912 3490	4150 912 3490	0158 040 6000	4160 251 2320
M12x1.25	12.6	18.1	17.0	24.1	15.24	14.0	13.90	14.11	0140 912 9490	4150 912 9490	0158 040 6000	4160 251 2920
M12x1.5	10.8	18.0	14.5	24.0	15.87	14.5	14.27	14.51	0140 912 4490	4150 912 4490	0158 040 6000	4160 251 2420
M14x1.25	14.2	17.8	18.9	23.6	17.25	16.0	15.90	16.11	0140 914 9490	4150 914 9490	**	4160 251 4920
M14x1.5	12.6	21.0	16.7	28.0	17.87	16.5	16.27	16.52	0140 914 4490	4150 914 4490	**	4160 251 4420
M16x1.5	14.4	24.0	19.1	32.0	19.90	18.5	18.27	18.52	0140 916 4490	4150 916 4490	**	4160 251 6420

Böllhoff International with companies in:

Argentina
Austria
Brazil
Canada
China
Czech Republic
France
Germany
Hungary
India
Italy
Japan
Mexico
Poland
Romania
Russia
Slovakia
Spain
Turkey
United Kingdom
USA

Apart from these 21 countries, Böllhoff supports its international customers in other important industrial markets in close partnership with agents and dealers.



Subject to technical change.
Reprinting, even in extract form, only permitted with express consent.
Observe protective note according to DIN 34.

Böllhoff Group
Please find your local contact on **www.boellhoff.com**
or contact us under **fasteningtechnology@boellhoff.com**

BÖLLHOFF