IE5325

Inductive sensor

IEB3002BAPKG/0,8M/FH/US100DPOR

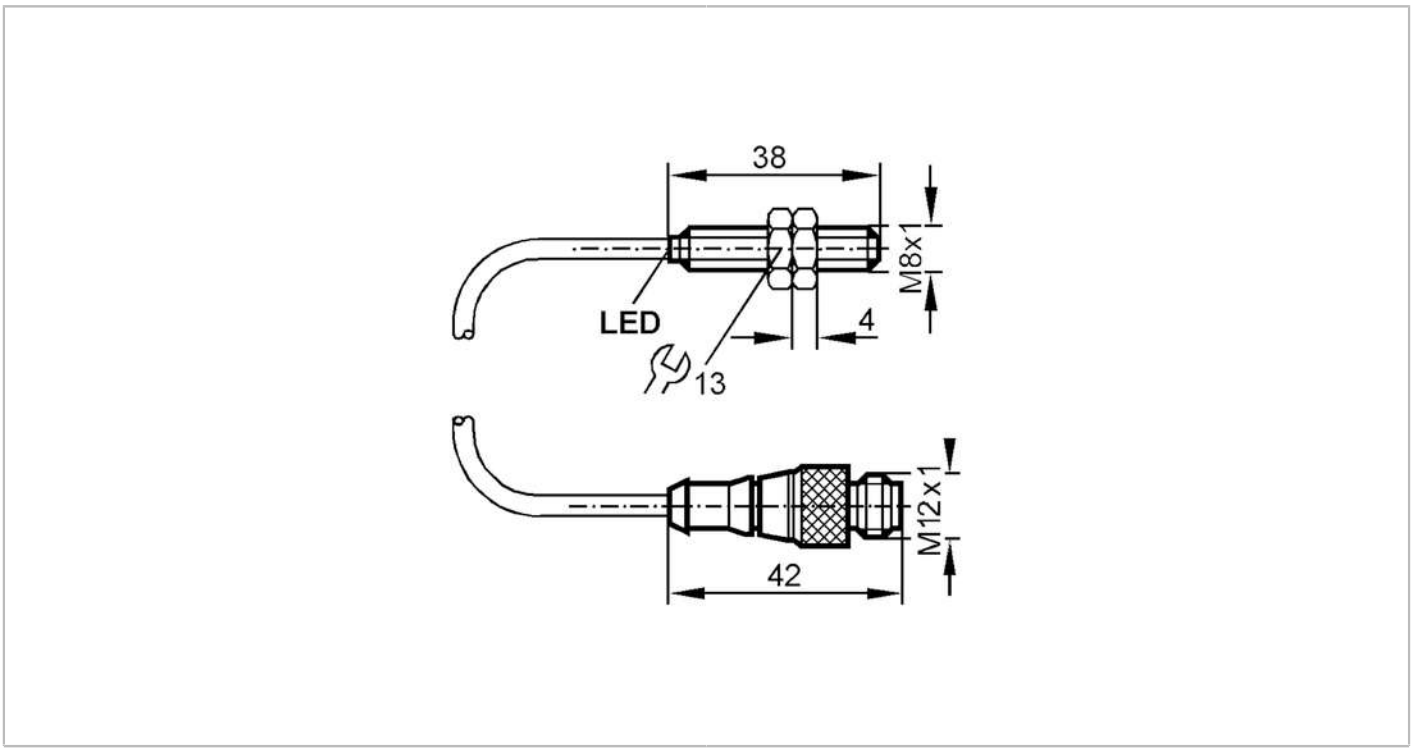

Product characteristics		
Electrical design		PNP
Output function		normally closed
Sensing range	[mm]	2
Housing		threaded type
Dimensions	[mm]	M8 x 1
Electrical data		
Operating voltage	[V]	10...36 DC
Current consumption	[mA]	15; (24 V)
Protection class		III
Reverse polarity protection		yes
Outputs		
Electrical design		PNP
Output function		normally closed
Max. voltage drop switching output DC	[V]	2.5
Permanent current rating of switching output DC	[mA]	200
Short-time current rating of switching output	[mA]	200
Switching frequency DC	[Hz]	1000
Short-circuit protection		yes
Overload protection		yes

IE5325

Inductive sensor

IEB3002BAPKG/0,8M/FH/US100DPOR

Detection zone			
Sensing range	[mm]	2	
Real sensing range Sr	[mm]	2 ± 10 %	
Operating distance	[mm]	0...1.62	
Accuracy / deviations			
Hysteresis	[% of Sr]	1...15	
Switch point drift	[% of Sr]	-10...10	
Operating conditions			
Ambient temperature	[°C]	-25...70	
Protection		IP 67	
Tests / approvals			
EMC		EN 61000-4-2 ESD	4 kV CD / 8 kV AD
		EN 61000-4-3 HF radiated	3 V/m
		EN 61000-4-4 Burst	2 kV
		EN 61000-4-6 HF conducted	3 V
		EN 55011	class B
MTTF	[years]	2804	
Mechanical data			
Weight	[g]	39.4	
Housing		threaded type	
Mounting		flush mountable	
Dimensions	[mm]	M8 x 1	
Thread designation		M8 x 1	
Materials		brass white bronze coated; LCP	
Tightening torque	[Nm]	A = 5 mm: 1 Nm; B: 2 Nm	
Displays / operating elements			
Display		switching status	1 x LED, red
Accessories			
Items supplied		lock nuts: 2	
Remarks			
Pack quantity		1 pcs.	

Electrical connection - plug

Cable: 0.8 m, PUR; flame-retardant (FRNC); 3 x 0.14 mm²

Connector: 1 x M12; coding: A; Locking: rotatable



IE5325

Inductive sensor

IEB3002BAPKG/0,8M/FH/US100DPOR

Connection

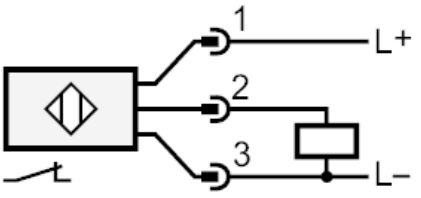

Diagrams and graphs

Installation

