182.72.104.66222..-E1Pendelrollenlager

Spherical roller bearings

22208-E1-XL (Series 222..-E1)

main dimensions to DIN 635-2

The datasheet is only an overview of dimensions and basic load ratings of the selected product. Please always observe all the guidelines in these overview pages. Further information is given on many products under the menu item "Description". You can also order comprehensive information via the Catalogue selection system (https://www.schaeffler.de/content.schaeffler.de/en/news_media/index.jsp) or by telephone on +49 (91 32) 82 - 28 97.

d	40	mm	
D	80	mm	
B	23	mm	
D_1	70,4	mm	
d_2	48,8	mm	
$D_{a\ max}$	73	mm	
$d_{a\ min}$	47	mm	
d_s	3,2	mm	
n_s	4,8	mm	
$r_{a\ max}$	1	mm	
r_{min}	1,1	mm	
m	0,528	kg	Mass
C_r	101000	N	Basic dynamic load rating, radial
C_{0r}	91000	N	Basic static load rating, radial
e	0,27		
Y_1	2,49		
Y_2	3,71		
Y_0	2,43		
n_G	10500	1/min	Limiting speed
n_B	6200	1/min	Reference speed
C_{ur}	11800	N	Fatigue limit load, radial

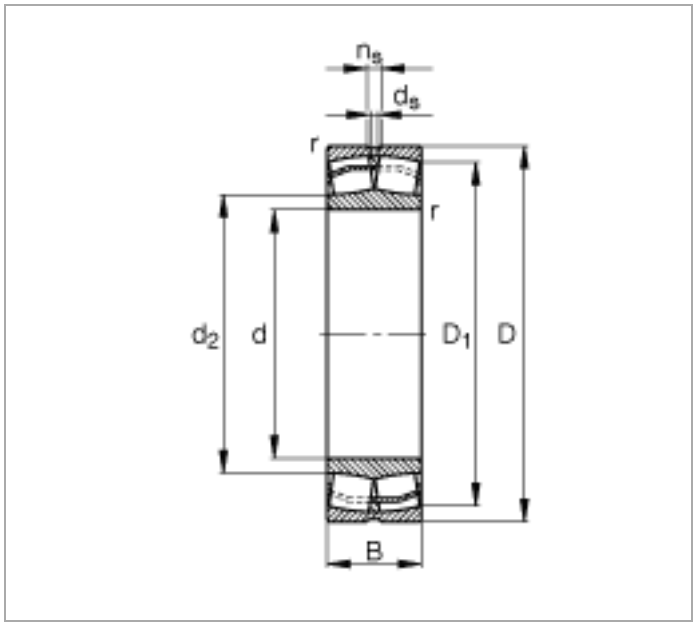
n_s
d_s
r
r
d_2
d
D_1
D
B

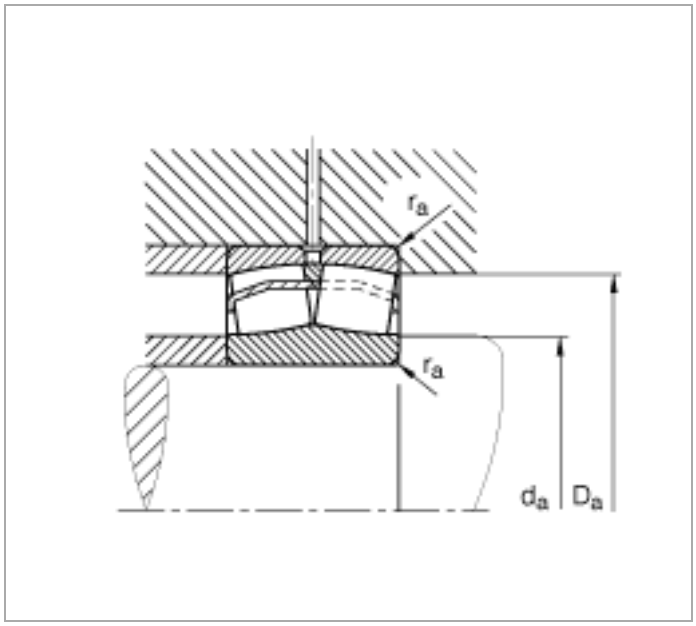
r_a
r_a
d_a
D_a