E43338

O-ring

O-RG 6,50x1,50/EPDM/70/SW 5 PIECES

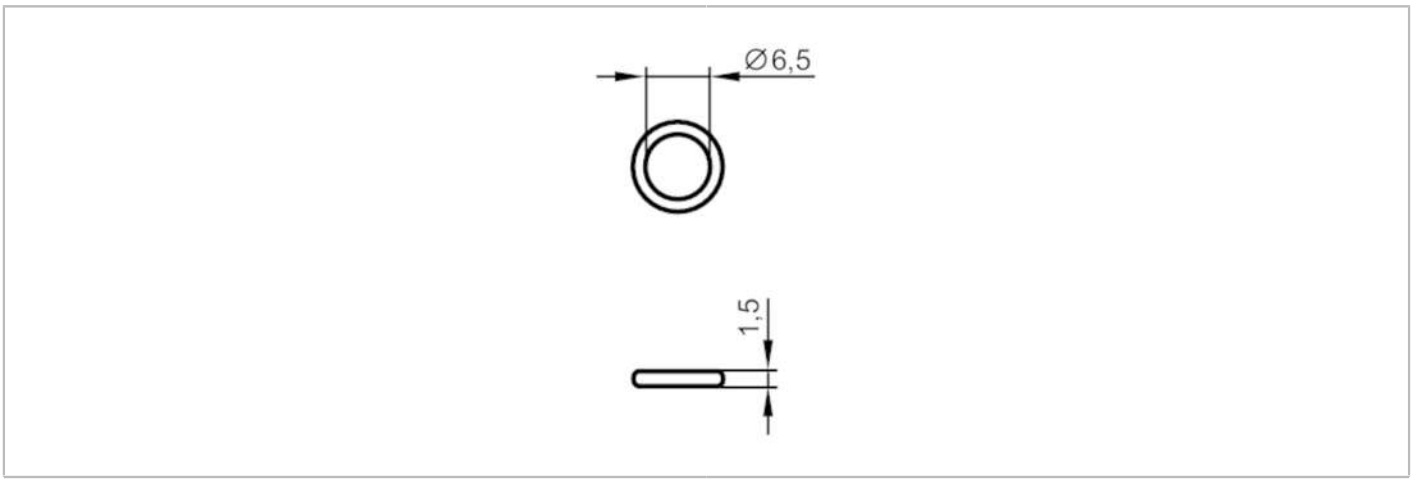

EC 1935/2004 EHEDG Certified FDA KTW/W270

Mechanical data		
Weight	[g]	1.85
Inside diameter	[mm]	6.5
External diameter	[mm]	9.5
Materials		EPDM
Remarks		
Pack quantity		5 pcs.