2307UK/07.03

Blind Rivet Nuts and Studs

RIVNUT®



Fasteners for sheet metal and plastic, offering a simple solution for mounting strong threads even for single-sided installation.

www.bollhoff.com/uk

BÖLLHOFF

Our Quality and Environmental Management system is excellent!
DIN EN ISO 9001:2000
14001 and ISO/TS
16949:2002

RIVNUT® *Blind rivet nuts and studs, our product portfolio*

		Steel	Stainless steel	Aluminium	Sizes	Flat head	Countersunk head	Extra-small countersunk	Open	Closed	Round body plain	Round body knurled	Hexagonal body	Part hexagonal body	Page
	**RIVNUT®** ***plus***	●			M4 to M10	●			●			●			**15**
	**RIVNUT®** ***plus***	●			M4 to M8	●			●					●	**15**
	**RIVNUT®** ***plus***	●			M4 to M10			●	●			●			**15**
	**RIVNUT®** ***plus***	●			M4 to M8			●	●					●	**15**
	**RIVNUT®**	●			M3 to M14	●			●	●	●				**16**
	**RIVNUT®**	●			M3 to M14		●		●	●	●				**17**
	**RIVNUT®**	●			M3 to M10	●			●	●		●			**18**
	**RIVNUT®**	●			M3 to M10		●		●	●		●			**19**
	**RIVNUT®US**	●			UNC and UNF	●			●	●	●				**20-21**
	**RIVNUT®TW**	●			M4 to M10	●			●			●			**22-23**
	**RIVNUT®**	●			M4 to M12	●			●	●			●		**24**

RIVNUT® *Blind rivet nuts and studs, our product portfolio*

		Steel	Stainless steel	Aluminium	Sizes	Flat head	Countersunk head	Extra-small countersunk head	Open	Closed	Round body plain	Round body knurled	Hexagonal body	Part hexagonal body	Page
	**RIVNUT®**	●			M3 to M8			●	●		●				**25**
	**RIVNUT®**	●			M3 to M12			●	●	●		●			**26**
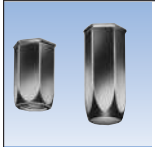	**RIVNUT®**	●			M4 to M12			●	●	●			●		**27**
	**RIVNUT®**	●			M4 to M8			●	●					●	**27**
	**RIVNUT® with optimised head projection**	●			M4 to M12			●	●				●		**28**
	**RIVNUT®**		●		M4 to M10	●			●		●				**29**
	**RIVNUT®**		●		M4 to M10		●		●		●				**30**
	**RIVNUT®**		●		M3 to M12	●			●	●		●			**31**
	**RIVNUT®**		●		M3 to M12		●		●	●		●			**32**
	**RIVNUT®**		●		M4 to M8			●	●		●				**33**
	**RIVNUT®**		●		M3 to M12			●	●	●		●			**34**

RIVNUT® *Blind rivet nuts and studs, our product portfolio*

		Steel	Stainless Steel	Aluminium	Sizes	Flat head	Countersunk head	Extra-small countersunk head	Open	Closed	Round body plain	Round body knurled	Hexagonal body	Part hexagonal body	Page
	**RIVNUT®**		●		M4 to M8	●			●					●	**35**
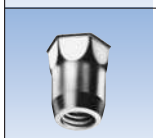	**RIVNUT®**		●		M4 to M8			●	●					●	**35**
	**RIVNUT®**			●	M3 to M12	●			●	●	●				**36**
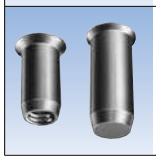	**RIVNUT®**			●	M3 to M12		●		●	●	●				**37**

			Page
	**RIVNUT® HRT**	RIVNUT® HRT blind rivet nuts with high resistance thread	**38-41**
	**RIVNUT® PN**	RIVNUT® PN Blind rivet nuts with slotted shank for ultimate pull-out force values	**42-43**
	**RIVNUT® AV**	RIVNUT® AV – Fasteners for vibrating components	**44-49**
	**RIVSTUD® Standard blind rivet studs**	RIVSTUD® Standard blind rivet studs	**50**
	**RIVSTUD® Special designs**	RIVSTUD® Special designs of blind rivet studs	**51**
	**RIVNUT® Special designs**	RIVNUT® Special designs of blind rivet nuts	**52-53**

Our product portfolio of **RIVNUT®** *Setting tools and Setting machines*

			Page
	**RIVNUT® Setting tools**	Hand-operated setting tool for limited production volumes, Typ S, Z 305	**54**
	**RIVNUT® Setting tools**	Hand and Battery operated setting tools for limited and medium production volumes, ZH 510, E 308	**55**
	**RIVNUT® Setting tools**	Hydraulic / pneumatic setting tools for medium and high production volumes, P 2005, P 803	**56**
	**RIVNUT® Setting machines**	RIVNUT® Setting machine, EPK C, SAC 310 Accessories for P 2005, P 803 and EPK C	**57**
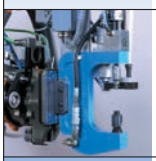	**RIVNUT® Setting machines**	RIVNUT® Installation machine, automatic setting head, HSA 803, CFA 803	**58**
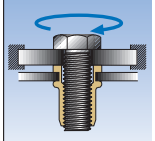	**RIVNUT®**	Advice for optimum assembly	**11 - 13**
	**RIVNUT®**	Examples of where our products can be found	**6**
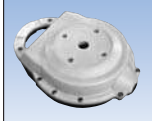	**RIVNUT®**	Advantages to you from using RIVNUT®	**7**
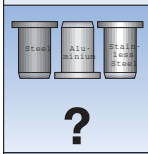	**RIVNUT®**	How to select the correct RIVNUT®	**8 - 10**
	**RIVNUT®**	RIVNUT® plus – Top class steel blind rivet nuts	**14 - 15**

Examples of where our products can be found

Our fastening and assembly technology finds uses in a diverse range of applications:

- Cars and motor-cycles, bumpers, safety belts, airbags etc.
- Commercial vehicles, trailers, fire engines
- Electrical and electronic products, safety cabinets
- Food processing industry, ovens, extraction hoods, fast food counters
- Heating and ventilation plant, air conditioning units and heating boilers etc.
- Office furniture, cash registers, chairs, desks, photocopiers
- Building and civil engineering, street furniture, conser-vatories
- In leisure areas, climbing walls, yachts, swimming pools etc.

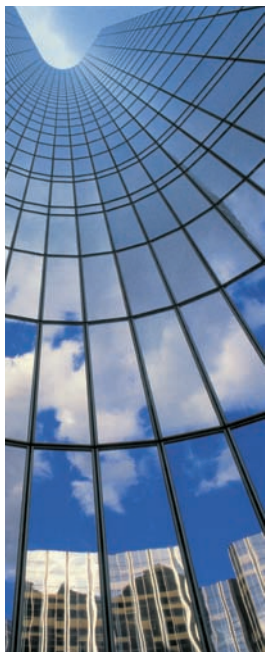









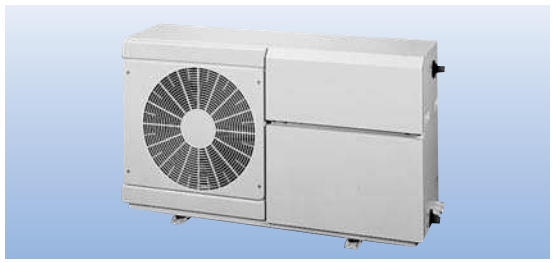





RIVNUT® *Advantages*

RIVNUT® blind rivet nuts and studs are the most versatile solution for adding a load carrying internal or external thread to thin-walled workpieces.

They can be installed into plastic or even ceramic components and into all metals.

The blind (i.e. one-sided) setting technique means that RIVNUT® blind rivet nuts and studs are often the only fastener solution for hollow sections, housings or where access is limited to one side of a component.

No additional finishing is required after setting, even with coated or painted components. Thus RIVNUT® blind rivet nuts and studs can be fitted at any stage in the production process, making their use extremely flexible.

Unlike welded captive nuts, RIVNUT® blind rivet nuts and studs do not subject the components to the damaging effects of high temperatures. The installer is safe as no fumes or gasses are produced and there is no risk of fire.

The short time it takes to set RIVNUT® and their low installation costs, mean that RIVNUT® blind rivet nuts and studs have clear economic advantages compared with all other types of fasteners:

- Cumbersome presses or pliers are not required.
- RIVNUT® blind rivet nuts and studs assemblies can be safely made and remade without loss of performance.
- For manufacturers who wish to supply components with pre-fitted threaded connections, RIVNUT® blind rivet nuts and studs offer advantages without risks.

RIVNUT® *Examples of applications*

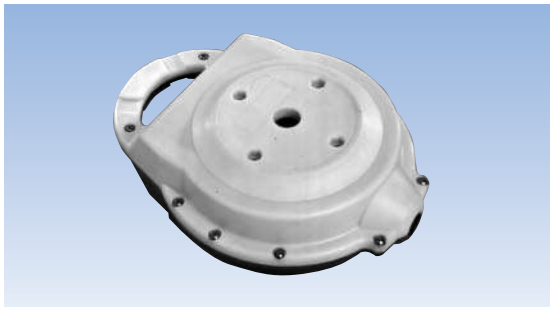

Advantage: The knurled body gives high turning resistance.

Cable reel
RIVNUT®*plus* M4, steel, flat head, knurled body.

Desk frame
RIVNUT® M8, steel, flat head, round body.

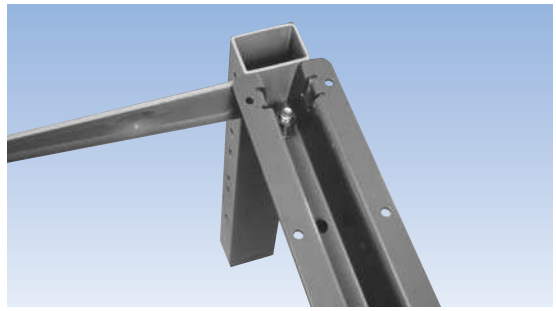

Advantage: Blind assembly from one side only.

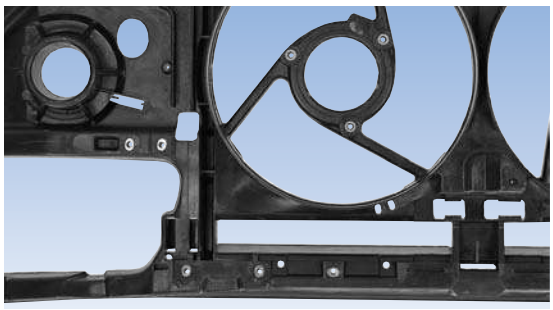

Advantage: Extra-large flat head gives increased strength compared to standard RIVNUT®.

Plastic front grille
RIVNUT® M6, steel, round body underhead with knurl, open end.

Motor scooter spoiler
RIVNUT® M5, steel, flat head, knurled body.



Advantage: Extra-large flat head gives increased strength compared to standard RIVNUT®.

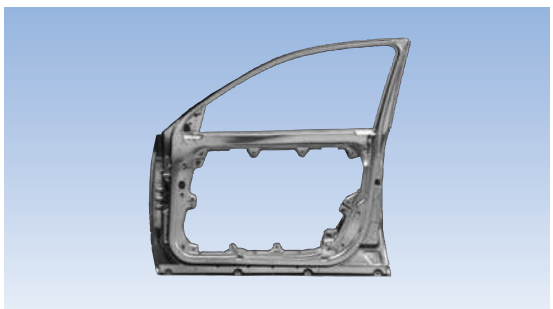

Advantage: Allows fully automatic assembly.

Car door (interior) galvanised steel
RIVNUT® M6, steel, extra-small head, hexagonal body, open end.

Weighing machine base
RIVNUT® M5, stainless steel, small hexagonal head, closed end.

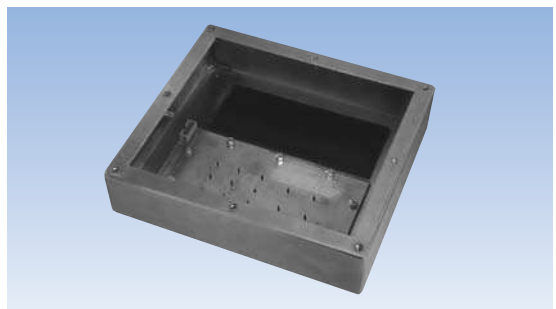

Advantage: Splash-proof fastening.

RIVNUT® *Selection criteria for blind rivet nuts*

Glossary of technical terms

- **Head**
  The part of the RIVNUT® blind rivet nut in contact with the top surface of the workpiece.
- **Body**
  The part of the RIVNUT® blind rivet nut below the head.

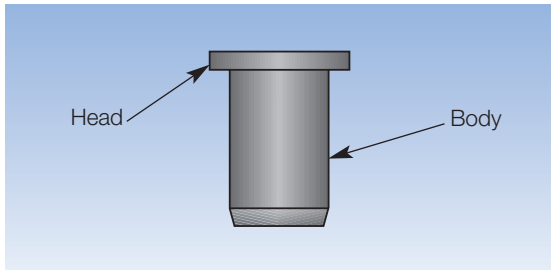

- **Clamp thickness**
  The total thickness of material made up of layers from one or more workpieces into which the RIVNUT® blind rivet nut is installed.
- **Grip range**
  The thickness of material must be between the minimum and the maximum values for which the RIVNUT® blind rivet nut was designed (the grip range).

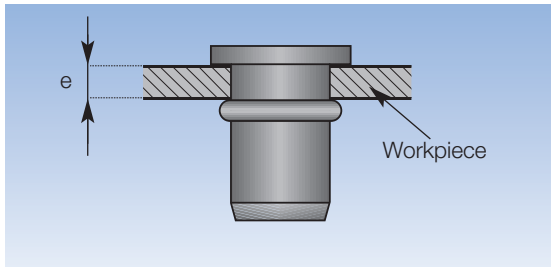

- **Hole dimensions**
  Given as diameter d for cylindrical holes and the across the flats dimension h for hexagonal holes.

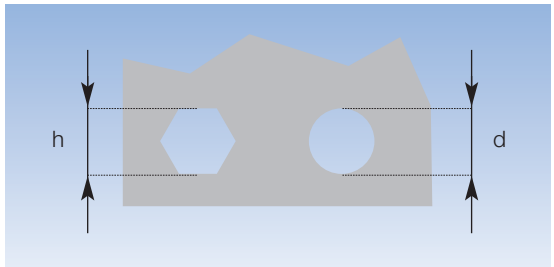

- **Blind rivet nut materials**
  RIVNUT® blind rivet nuts are manufactured from steel, stainless steel or aluminium. The materials we use have good deformability properties and a high resistance to turning in the upset area. Standard stainless steel RIVNUT® blind rivet nuts and studs are made from A1 or A2 austenitic steel containing 18 % chromium and 10 % nickel. Each material has its own advantages:
  Steel = suitable for general use
  Aluminium = low weight, corrosion resistant
  Stainless steel = resistant to corrosion and temperature

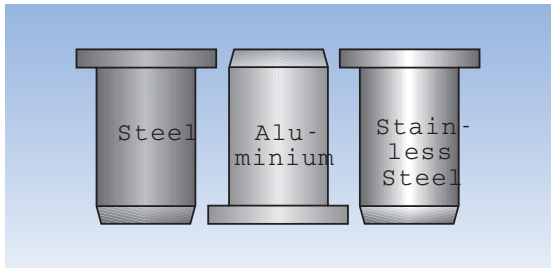

- **Mandrel and anvil**
  Mandrel: The threaded stud on to which the RIVNUT® blind rivet nut is completely threaded.
  Anvil: The part of the setting tool that is in contact with the RIVNUT® blind rivet nut head during the setting process.

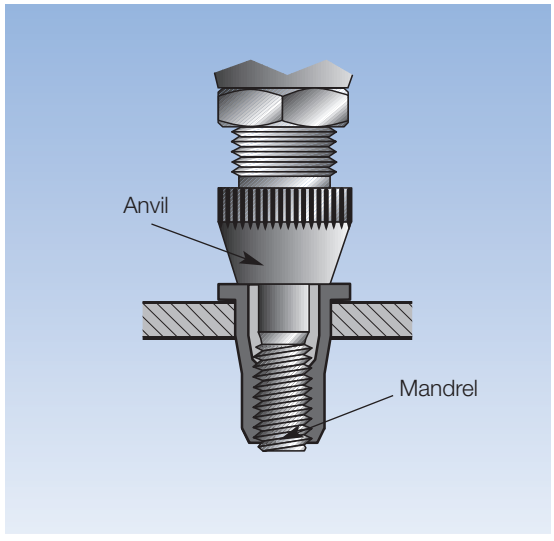

Selecting the head

- **Flat head**

  This versatile head type is the one most commonly used in industry.
  The arrow and V should point at the line between B and A, not at the gap created by deep-drawing. The idea is to demonstrate that the gap between B and A can be reduced to zero by deep-drawing.

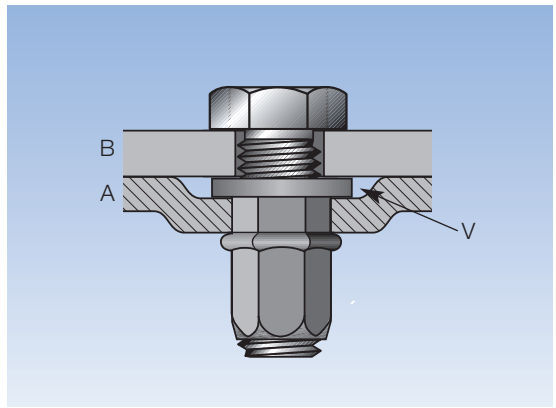

- **Extra-small countersunk head**

  This head type is used where the gap V is required to be small or zero.
  V can be reduced to zero by:
  - Using a collar to punch a slight depression in the parent material A
  - By a slight countersinking of A

  With malleable material the gap V is automatically eliminated.

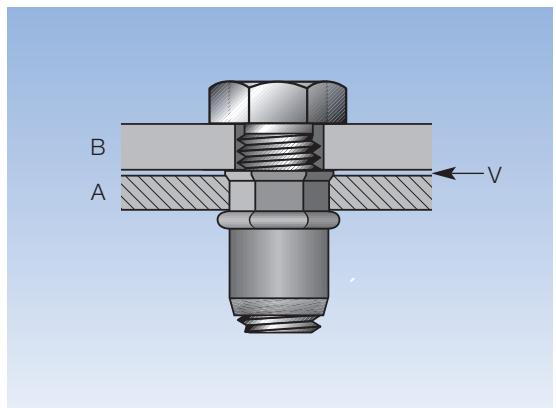

  Extra-small countersunk heads are an improved alternative to countersunk heads as they do not require the hole to be countersunk. However, they should not be used if:
  - The hole is out of tolerance
  - The parent material is malleable (as this could cause the head to pull through)
  - The screw exerts a lateral moment on the RIVNUT® blind rivet nut.

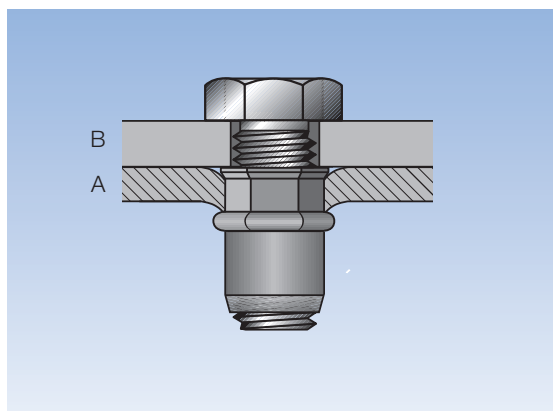

  RIVNUT® blind rivet nuts with extra-small countersunk heads are installed using setting tools with standard nosepieces.

- **Countersunk head**

  Countersunk heads generally require countersinking of the parent material. Therefore a countersunk head is used where the gap V is required to be negligible but an extra-small countersunk head cannot be used.
  We recommend that the countersinking (f) is made slightly shallower than the RIVNUT® countersunk head so that the head projects slightly beyond the surface of the supporting part A and thus makes as much contact as possible with the attached part B (V > 0) (detailed information on dimension (f) can be found on pages 17, 19, 26, 28 and 33).

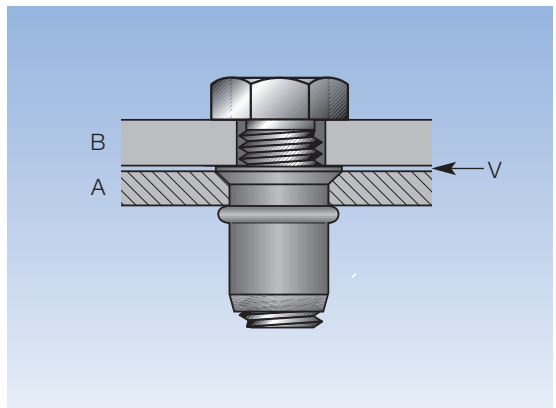

RIVNUT® *Selection criteria for blind rivet nuts*

Selecting the body

- **Hexagonal body**
  Using a hexagonal body in a hexagonal hole ensures the RIVNUT® blind rivet nut has the best resistance to over-torque turning.

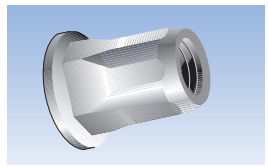

- **Round body,** knurled or plain
  For use where a hexagonal hole is not possible.
  The knurled version is preferred to the smooth, particularly for use in plastic or soft materials (aluminium, PA, SMC etc.).

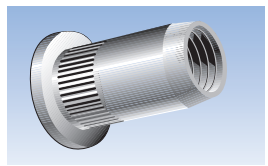

- **Open end**
  This is the most common option due to its compact form and the free choice of screw length.

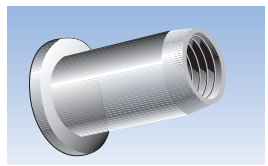

- **Closed end**
  For all uses where no liquid is to be allowed to pass between the screw and the RIVNUT® blind rivet nut. To form a pressure-tight seal between the blind rivet nut and the workpiece we manufacture RIVNUT® blind rivet nuts with a seal on the body side (see example on page 49).

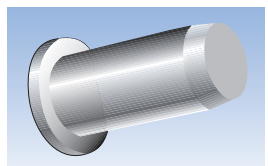

Selecting RIVNUT® *blind rivet nuts and studs to suit your component*

Measure the thickness of the parent material. Check that this thickness is within the RIVNUT® grip range (minimum – maximum).
If you have a choice between two RIVNUT® blind rivet nuts in the allowable tolerance range:

- Select the shorter RIVNUT® if the workpiece is hard. Use a 2330 706 0230 rather than a 2330 706 0255 for a material thickness of 3 mm.
- Select the longer RIVNUT® if the workpiece is soft. Use a 2330 706 0255 rather than a 2330 706 0230 for a material thickness of 3 mm.
- A relatively wide upset area is required for plastic workpieces and soft parent materials (aluminium) to achieve a high mechanical strength. Please contact us about this.

Surface treatment

All RIVNUT® steel blind rivet nuts and studs are zinc plated. The standard supplied surface treatment is 8µ zinc plated, chrome free irridescent passivated. Other surface treatments are available on request for different corrosion resistance requirements

Selecting the material

Standard RIVNUT® are supplied in steel, aluminium and stainless steel. The choice of material depends on the strength of the RIVNUT® blind rivet nut and stud (see table page 12) and the required corrosion resistance of the completed end product. Our standard products manufactured from stainless steel are suitable for use in some catering and food processing industries. We would be pleased to provide you with further information on stainless steel or brass RIVNUT® blind rivet nuts or about corrosion resistance.

RIVNUT® *Advice for optimum assembly*

Before setting

- Hole diameter: Hole diameter requirements should be taken from the appropriate product table. The surfaces in the grip range should be parallel +/– 0.05.
- If possible use the preferred hexagonal or knurled RIVNUT® and always:
  - Install the RIVNUT® blind rivet nuts and studs in accordance with our recommendations (stroke S),
  - Ensure that the parts to be joined cannot rotate with respect to one another and that the gap between the elements to be riveted together is not too large.

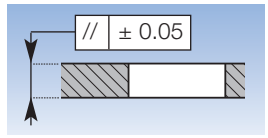

Setting

- We recommend that you use the spin-pull-spin setting technique. With this technique, the RIVNUT® blind nut or stud is threaded (spun) on to the mandrel, inserted into the hole and then pulled back (without rotation) to upset the rivet nut body. Finally the mandrel is spun out.

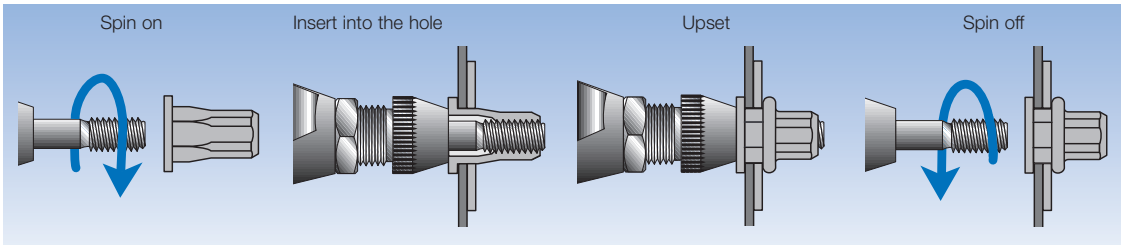

Our range of setting tools can be found on pages 54 to 58.
The P 803 and EPK C setting tools have a pressure monitoring system, which is very useful for components with varying thicknesses (guarantees consistent setting).
Important: Setting several RIVNUT® at the same time can be done using a press. However, we advise you to contact us in advance about this. We would not recommend that you use mechanical screw drivers or spanners for blind riveting as they can damage the surface of the thread and thus have a detrimental effect on your assembly.

- **Adjusting the stroke**
- The product tables from page 15 onwards contain the setting stroke values recommended for optimum setting of each type of RIVNUT® blind rivet nut, e.g.:
  RIVNUT® 2330 706 0230, P. 15, S = 5 – e, i.e. for a material thickness of e = 2 mm the RIVNUT® stroke S is adjusted to S = 5 – 2 = 3 mm.
  - Note: The stroke is measured on the RIVNUT® (the difference in length before and after setting) and not on the tool. We recommend that you carry out a trial assembly before starting series production.

After setting

- **Maximum dimension of the crimping flange (w)**
  This applies to RIVNUT®*plus* and RIVNUT® blind rivet nuts and studs with the exception of the extra-small countersunk heads type 3430 1, 3430 8, 3432 1.

Size RIVNUT®	M3	M4	M5	M6	M8	M10	M12
Max. crimping flange dimension (mm)	6.8	8.6	10.1	13.0	15.0	18.0	22.4

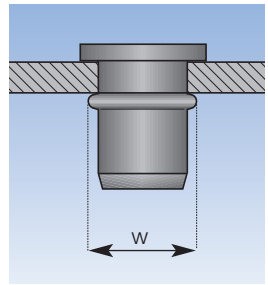

- **Axial dimensions after setting**
  The tables on pages 15 to 37, 43 and page 50 show indicative values of the projecting body length L_2 after installation.

RIVNUT® *Advice for optimum assembly*

Selecting the mating screws

RIVNUT® internal threads are manufactured to the most common industrial tolerances (6H, in accordance with ISO 68). They are designed for use with most commercially available screws, i.e. including the most commonly used screw tolerance 6g.

RIVNUT® *blind rivet nuts and studs, screw tightening torque*

RIVNUT® can be used with all the screw types shown in the table below providing the tightening torque (in Nm) for screws corresponding to Grade 8.8. Where required, RIVNUT® may be used beyond these values.
It is recommended that the ultimate strength of individual applications be determined prior to use.

Size RIVNUT®	Steel / stainless steel	Aluminium
M3	1.2	0.7
M4	3	2
M5	6	4
M6	10	6
M8	24	15
M10	48	27
M12	82	45

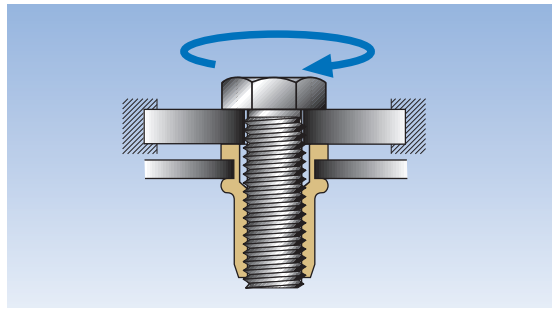

Note: For steel and stainless steel RIVNUT® from size M 3 up to and including M 10 these torques correspond to grade 8.8 screws.

Screw length

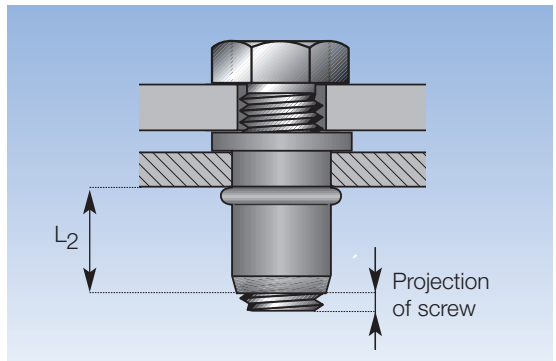

- **In a RIVNUT® with an open end body**
  The screw must project at least one thread length beyond the RIVNUT® open end.

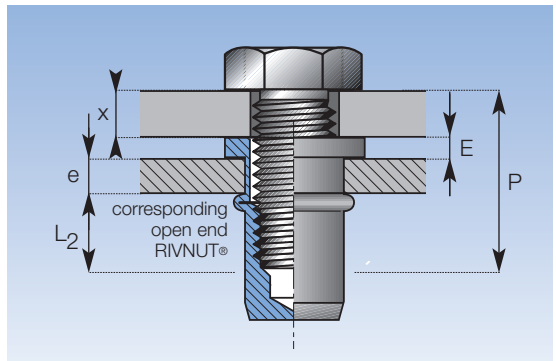

- **In a RIVNUT® with a closed end body**
  To calculate the maximum shaft length of the screw (Pmax.) for use in a closed end RIVNUT®, first determine the length L_2 of the corresponding openen end RIVNUT®.
  Then Pmax. = L_2 + e + E + X

Hole in the attached part

The recommended diameter d_2 of the hole in the attached part is equal to the screw diameter multiplied by 1.1.

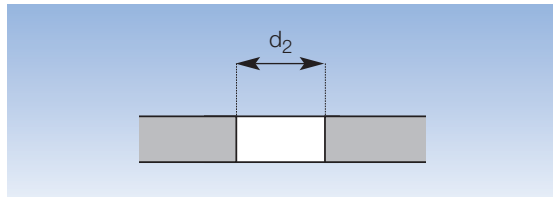

If countersunk or flat heads are used for a multiple RIVNUT® blind rivet nut installation in one workpiece, then if necessary this value should be altered to achieve equal spacing.

RIVNUT® *Advice for optimum assembly*

Thread lubricant

For the installation of large numbers of RIVNUT®, and in particular when using stainless steel components, to obtain the best connection every time, we recommend that the mandrel is lubricated before installation starts and after that at regular intervals.

Mechanical characteristics of RIVNUT® *internal and external threads*

Axial proof load

Size	RIVNUT® blind rivet nut steel & stainl. steel	RIVNUT® blind rivet nut aluminium	RIVSTUD® blind rivet stud steel
M3	4 000	2 500	/
M4	6 800	4 000	/
M5	10 000	5 500	8 100
M6	15 000	8 300	11 500
M8	27 000	13 000	21 000
M10	37 000	20 000	/
M12	54 000	28 000	/

Unit: N

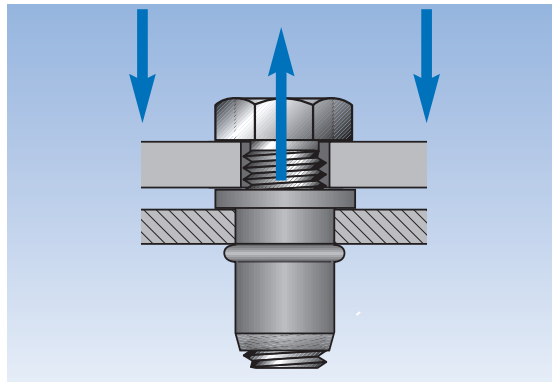

Ideal setting temperature: –30 to +80 °C.

Special applications

Rivet function
In addition to acting as blind nuts or studs, RIVNUT® can also be used to rivet two parts together and provide a threaded mounting for a third.

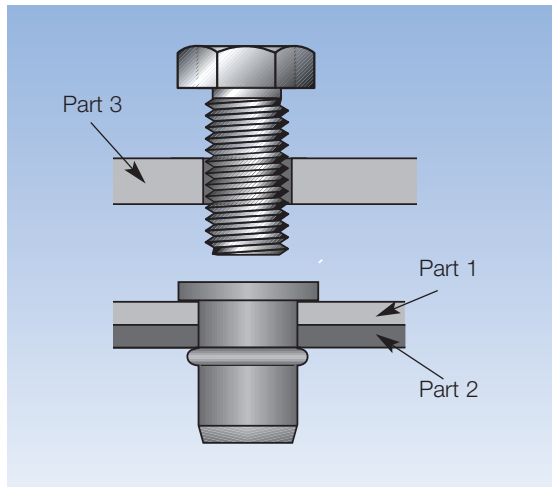

Rear strengthened wall
RIVNUT® blind rivet nuts and studs can be installed blind into walls with rear foam strengthening.

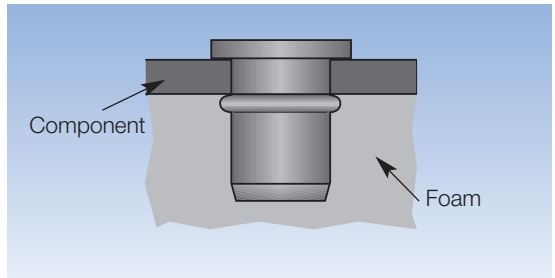

RIVNUT®*plus* top class steel blind rivet nuts

- **Top class simplicity.**
  Our range of 20 RIVNUT®*plus* covers 80 % of all your requirements for RIVNUT® steel blind rivet nuts.
  RIVNUT®*plus* speeds up product selection, simplifies ordering and stock control.



- **Top class availability.**
  All products in the RIVNUT®*plus* range are available immediately from stock.

- **Top class connection efficiency.**
  - **RIVNUT®*plus* blind rivet nuts with knurled round bodies.**
    The knurls provide additional security and resistance to turning for a RIVNUT® blind rivet nut in a cylindrical hole. Tests have shown that knurled RIVNUT® blind rivet nuts perform better than plain RIVNUT® blind rivet nuts even in hard parent material.

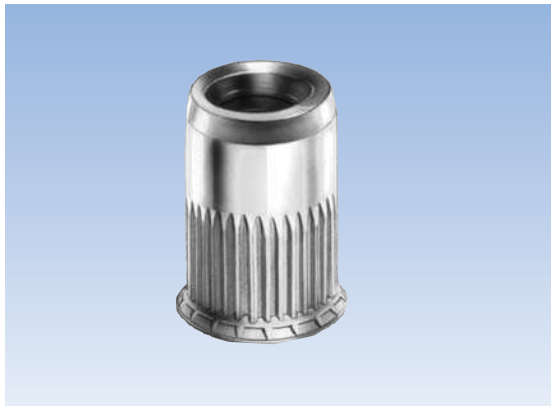

- **RIVNUT®*plus* blind rivet nuts with part-hexagonal bodies.**
  Being hexagonal over only part of the body, a spanner cannot be attached to mistakenly loosen the RIVNUT® blind rivet nut after installation (this could damage the connected component).
  This is important for applications in which regular maintenance is carried out for the whole of the service life of the product.



- **Premium quality.**
  RIVNUT®*plus* carries the Böllhoff logo, signifying that it is a high quality product.

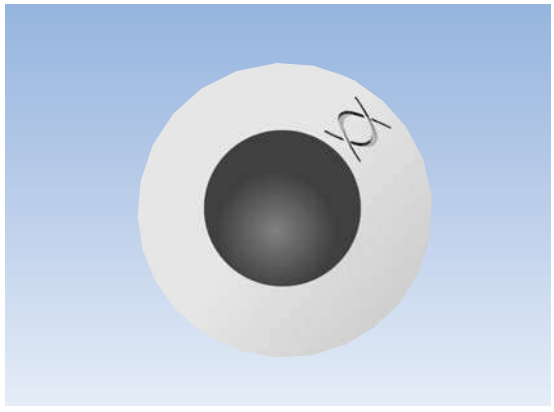

RIVNUT®*plus top class steel blind rivet nuts*

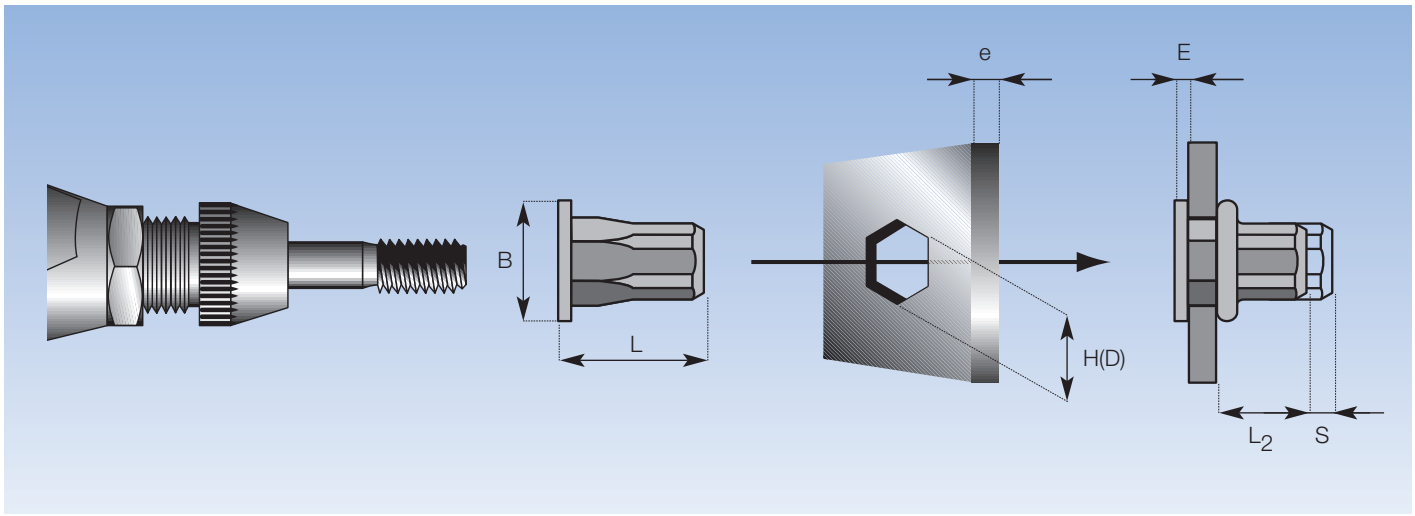

Type	Thread d	Material thickness e	Hole- round (D) hexagonal (H) Tol. $^{+0.1}$/$_0$	Ø Head B	Projection after setting E	Setting stroke S	Total length L	Blind side projection after setting L_2	Product code
									B 70 300
	M4	0.5 – 3	6	9	1	S = 4.5-e	11.3	5.8	**2330 7**04 0230
	M5	0.5 – 3	7	10	1	S = 4.7-e	13	7.3	**2330 7**05 0230
	M6	0.5 – 3	9	13	1.5	S = 5-e	14.5	8	**2330 7**06 0230
	M6	3 – 5.5	9	13	1.5	S = 7.5-e	17.2	8.2	**2330 7**06 0255
	M8	0.5 – 3	11	16	1.5	S = 5.5-e	18	11	**2330 7**08 0230
	M8	3 – 5.5	11	16	1.5	S = 8.1-e	20.7	11.1	**2330 7**08 0255
	M10	0.7 – 3.5	13	19	2	S = 6.1-e	22	13.9	**2330 7**10 0235
									B 70 500
	M4	0.5 – 3	6	9	1	S = 4.5-e	11.3	5.8	**2334 1**04 0230
	M5	0.5 – 3	7	10	1	S = 4.7-e	13	7.3	**2334 1**05 0230
	M6	0.5 – 3	9	13	1.5	S = 5-e	14.5	8	**2334 1**06 0230
	M8	0.5 – 3	11	16	1.5	S = 5.3-e	18	11.2	**2334 1**08 0230

Type	Thread d	Material - thickness e	Hole- round (D) hexagonal (H) Tol. $^{+0.1}$/$_0$	Ø Head B	Projection after setting E_{max}	Setting stroke S	Total length L	Blind side projection after setting L_2	Product code
									B 71 100
	M4	0.5 – 3	6	6.7	0.3	S = 4.9-e	11	5.8	**3436 7**04 0230
	M5	0.5 – 3	7	8	0.3	S = 5.3-e	13	7.4	**3436 7**05 0230
	M6	0.5 – 3	9	10	0.4	S = 5.1-e	14	8.5	**3436 7**06 0230
	M8	0.5 – 3	11	12	0.4	S = 6-e	17.5	11.1	**3436 7**08 0230
	M10	0.7 – 3.5	13	14	0.5	S = 6.5-e	21	14	**3436 7**10 0235
									B 71 200
	M4	0.5 – 3	6	7.5	0.3	S = 4.7-e	11	6	**3434 1**04 0230
	M5	0.5 – 3	7	8.7	0.3	S = 5.2-e	13	7.5	**3434 1**05 0230
	M6	0.5 – 3	9	10.9	0.4	S = 5.3-e	14	8.3	**3434 1**06 0230
	M8	0.5 – 3	11	13.3	0.4	S = 5.8-e	17.5	11.3	**3434 1**08 0230

Dimensions in mm

Surface treatment: 8µ Zinc/Nickel with clear passivate (ROHS Compliant), 200/400 hours Salt Spray Resistance

RIVNUT® *Steel blind rivet nuts/ Extending the* RIVNUT®*plus range*

Round body, plain, with flat head

Types 2330 1 open and 2332 1 closed



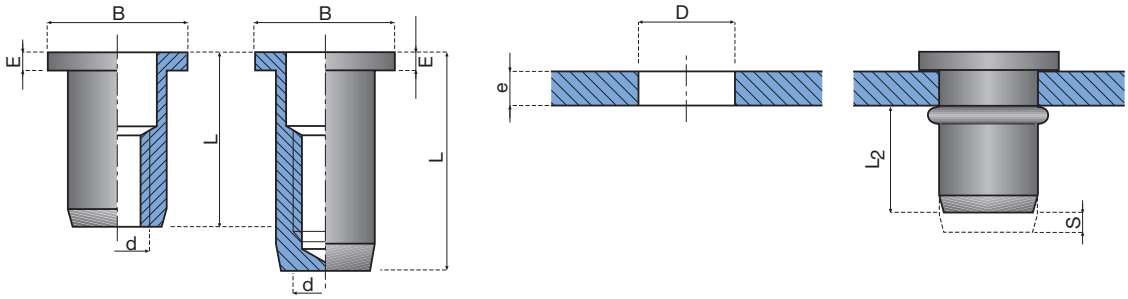

Advantages:

- High crimping force
- Screw length can be varied (open end)
- Splash-proof (closed end)

For the products shown in Blue we recommend the use of **RIVNUT®*plus*** 2330 7, page 15.

d	Thickness e	Hole D +0,1/0	B	E	S*	Open end L	Open end L_2*	Open end Product code	Closed end L	Closed end L_2*	Closed end Product code
M3	0.5 – 1.0	5	7.5	1.0	S = 2.8-e	8.5	4.8	2330 103 0010	12.5	8.8	2332 103 0010
	1.0 – 1.5	5	7.5	1.0	S = 3.3-e	9.0	4.8	2330 103 0015	13.0	8.8	2332 103 0015
	1.5 – 3.0	5	7.5	1.0	S = 4.8-e	10.0	4.8	2330 103 0030	14.0	8.8	2332 103 0030
	3.0 – 4.5	5	7.5	1.0	S = 6.3-e	11.5	4.8	2330 103 0045	15.5	8.8	2332 103 0045
	4.5 – 6.0	5	7.5	1.0	S = 7.8-e	13.0	4.8	2330 103 0060	17.0	8.8	2332 103 0060
M4	0.5 – 1.0	6	9	1.0	S = 2.6-e	10.0	5.4	2330 104 0010	15.0	10.4	2332 104 0010
	1.0 – 2.0	6	9	1.0	S = 3.6-e	10.5	5.4	2330 104 0020	15.5	10.4	2332 104 0020
	2.0 – 4.0	6	9	1.0	S = 5.6-e	12.0	5.4	2330 104 0040	17.0	10.4	2332 104 0040
	4.0 – 6.0	6	9	1.0	S = 7.6-e	14.0	5.4	2330 104 0060	19.0	10.4	2332 104 0060
M5	0.5 – 3.0	7	10	1.0	S = 5-e	14.0	8.0	2330 105 0030	20.0	14.0	2332 105 0030
	3.0 – 5.5	7	10	1.0	S = 7.5-e	17.0	8.0	2330 105 0055	23.0	14.0	2332 105 0055
	5.5 – 8.0	7	10	1.0	S = 10-e	20.0	8.0	2330 105 0080	26.0	14.0	2332 105 0080
M6	0.5 – 3.0	9	13	1.5	S = 5.2-e	16.0	10.0	2330 106 0030	23.0	17.0	2332 106 0030
	3.0 – 5.5	9	13	1.5	S = 7.7-e	19.0	10.0	2330 106 0055	26.0	17.0	2332 106 0055
	5.5 – 8.0	9	13	1.5	S = 10.2-e	22.0	10.0	2330 106 0080	29.0	17.0	2332 106 0080
M8	0.5 – 3.0	11	16	1.5	S = 5.7-e	18.0	11.0	2330 108 0030	26.0	19.0	2332 108 0030
	3.0 – 5.5	11	16	1.5	S = 8.2-e	21.0	11.0	2330 108 0055	29.0	19.0	2332 108 0055
	5.5 – 8.0	11	16	1.5	S = 10.7-e	24.0	11.0	2330 108 0080	32.0	19.0	2332 108 0080
	8.0 – 10.5	11	16	1.5	S = 13.2-e	27.0	11.0	2330 108 0105	35.0	19.0	2332 108 0105
M10	1.0 – 3.5	13	19	2.0	S = 6.5-e	23.0	15. 0	2330 110 0035	33.0	25.0	2332 110 0035
	3.5 – 6.0	13	19	2.0	S = 9-e	26.0	15.0	2330 110 0060	36.0	25.0	2332 110 0060
	6.0 – 8.5	13	19	2.0	S = 11.5-e	29.0	15.0	2330 110 0085	39.0	25.0	2332 110 0085
	8.5 – 11.0	13	19	2.0	S = 14-e	32.0	15.0	2330 110 0110	42.0	25.0	2332 110 0110
	1.0 – 3.5	12	15.8	1.7	S = 7-e	19.0	11.0	2339 110 0703	/	/	/
M12	1.0 – 4.0	16	23	2.0	S = 7.7-e	27.0	17.5	2330 112 0040	39.0	29.5	2332 112 0040
	4.0 – 7.0	16	23	2.0	S = 10.7-e	30.0	17.5	2330 112 0070	42.0	29.5	2332 112 0070
	7.0 – 10.0	16	23	2.0	S = 13.7-e	33.0	17.5	2330 112 0100	45.0	29.5	2332 112 0100
M14**	1.5 – 3.0	18	24	2.5	S = 7.5-e	32.3	21.8	2330 114 0300	45.3	34.8	2332 114 0300
	3.0 – 4.5	18	24	2.5	S = 9-e	33.9	21.8	2330 114 0450	46.9	34.8	2332 114 0450
	4.5 – 6.0	18	24	2.5	S = 10.5-e	35.5	21.8	2330 114 0600	48.5	34.8	2332 114 0600
	6.0 – 7.5	18	24	2.5	S = 12-e	37.1	21.8	2330 114 0750	50.1	34.8	2332 114 0750
	7.5 – 9.0	18	24	2.5	S = 13.5-e	38.7	21.8	2330 114 0900	51.7	34.8	2332 114 0900

* Dimensions S and L_2 are indicative values. The difference in length S depends on the material thickness and is used as the setting tool stroke.
Dimensions in mm. Surface treatment: 8µ Zinc/Nickel with clear passivate (ROHS Compliant), 200/400 hours Salt Spray Resistance
**Details of setting tools on request.

RIVNUT® *Steel blind rivet nuts/ Extending the* RIVNUT®*plus range*

Round body, plain, countersunk head

Types 2331 1 open and 2333 1 closed

Advantages:

- Very small head projection
- High crimping force
- Screw length can be varied (open end)
- Splash-proof (closed end)



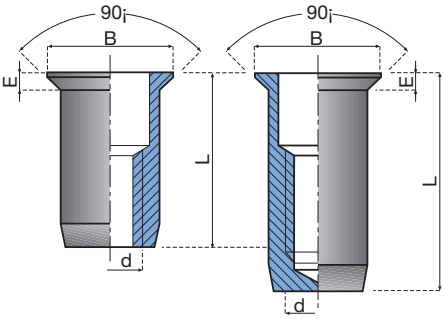

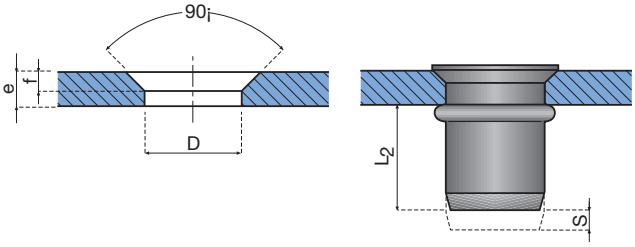

For the products shown in Blue we recommend the use of **RIVNUT®*plus*** 3436 7, page 15, which does not require any countersinking of the workpiece.

d	Thickness e	Hole $D^{+0.1}$	f	B	E	S*	Open end L	Open end L_2*	Open end Product code	Closed end L	Closed end L_2*	Closed end Product code
M3	1.0 – 1.5	5	0.9	6.6	1.0	S = 2.8-e	8.5	4.8	2331 103 0015	12.5	8.8	2333 103 0015
	1.5 – 3.0	5	1.3	7.2	1.4	S = 4.3-e	9.0	4.8	2331 103 0030	13.0	8.8	2333 103 0030
	3.0 – 4.5	5	1.3	7.2	1.4	S = 5.8-e	10.5	4.8	2331 103 0045	14.5	8.8	2333 103 0045
	4.5 – 6.0	5	1.3	7.2	1.4	S = 6.3-e	12.0	4.8	2331 103 0060	16.0	8.8	2333 103 0060
M4	1.0 – 2.0	6	0.9	7.6	1.0	S = 3.7-e	10.0	5.4	2331 104 0020	15.0	10.4	2333 104 0020
	2.0 – 3.0	6	1.3	8.2	1.4	S = 4.7-e	10.5	5.4	2331 104 0030	15.5	10.4	2333 104 0030
	3.0 – 5.0	6	1.3	8.2	1.4	S = 6.7-e	12.0	5.4	2331 104 0050	17.0	10.4	2333 104 0050
	5.0 – 7.0	6	1.3	8.2	1.4	S = 8.7-e	14.0	5.4	2331 104 0070	19.0	10.4	2333 104 0070
M5	1.5 – 4.0	7	1.5	9.6	1.6	S = 6.5-e	14.0	8.0	2331 105 0040	20.0	14.0	2333 105 0040
	4.0 – 6.5	7	1.5	9.6	1.6	S = 9-e	17.0	8.0	2331 105 0065	23.0	14.0	2333 105 0065
	6.5 – 9.0	7	1.5	9.6	1.6	S = 11.5-e	20.0	8.0	2331 105 0090	26.0	14.0	2333 105 0090
M6	1.5 – 4.0	9	1.5	11.7	1.6	S = 6.2-e	16.0	10.0	2331 106 0040	23.0	17.0	2333 106 0040
	4.0 – 6.5	9	1.5	11.7	1.6	S = 8.7-e	19.0	10.0	2331 106 0065	26.0	17.0	2333 106 0065
	6.5 – 9.0	9	1.5	11.7	1.6	S = 11.2-e	22.0	10.0	2331 106 0090	29.0	17.0	2333 106 0090
M8	1.5 – 4.0	11	1.5	13.5	1.6	S = 7-e	18.0	11.0	2331 108 0040	26.0	19.0	2333 108 0040
	4.0 – 6.5	11	1.5	13.5	1.6	S = 9.5-e	21.0	11.0	2331 108 0065	29.0	19.0	2333 108 0065
	6.5 – 9.0	11	1.5	13.5	1.6	S = 12-e	24.0	11.0	2331 108 0090	32.0	19.0	2333 108 0090
M10	1.5 – 4.0	13	1.5	15.5	1.6	S = 7.3-e	22.0	15.0	2331 110 0040	32.0	25.0	2333 110 0040
	4.0 – 6.5	13	1.5	15.5	1.6	S = 9.8-e	25.0	15.0	2331 110 0065	35.0	25.0	2333 110 0065
	6.5 – 9.0	13	1.5	15.5	1.6	S = 12.3-e	28.0	15.0	2331 110 0090	38.0	25.0	2333 110 0090
M12	1.7 – 4.5	16	1.7	19.0	1.8	S = 8.2-e	26.0	17.5	2331 112 0045	38.0	29.5	2333 112 0045
	4.5 – 7.5	16	1.7	19.0	1.8	S = 11.2-e	29.0	17.5	2331 112 0075	41.0	29.5	2333 112 0075
	7.5 – 10.5	16	1.7	19.0	1.8	S = 14.2-e	32.0	17.5	2331 112 0105	44.0	29.5	2333 112 0105
M14**	3.0 – 4.5	18	3.0	23.7	3.1	S = 9-e	31.4	21.8	2331 114 0450	44.4	34.8	2333 114 0450
	4.5 – 6.0	18	3.5	24.0	3.6	S = 10.5-e	33.0	21.8	2331 114 0600	46.0	34.8	2333 114 0600
	6.0 – 7.5	18	3.5	24.0	3.6	S = 12-e	34.6	21.8	2331 114 0750	47.6	34.8	2333 114 0750
	7.5 – 9.0	18	3.5	24.0	3.6	S = 13.5-e	36.2	21.8	2331 114 0900	49.2	34.8	2333 114 0900

* Dimensions S and L_2 are indicative values. The difference in length S depends on the material thickness and is used as the setting tool stroke.
Note: Countersink angle 90°. The optimum countersink depth f is slightly less than E.
Dimensions in mm. Surface treatment: 8µ Zinc/Nickel with clear passivate (ROHS Compliant), 200/400 hours Salt Spray Resistance
**Details of setting tools on request.

RIVNUT® *Steel blind rivet nuts/ Extending the* RIVNUT®*plus range*

Round body, linear knurls in grip range, flat head

Types 2330 7 open and 2332 7 closed

Advantages:

- Increased turning resistance
- Suitable for soft components (aluminium, plastic,...)
- High crimping force
- Screw length can be varied (open end)
- Splash-proof (closed end)



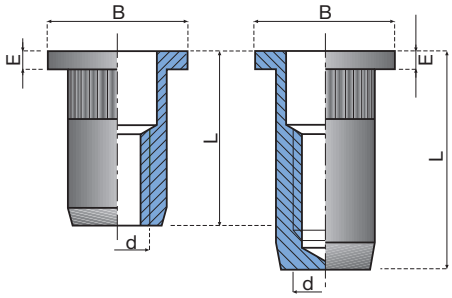

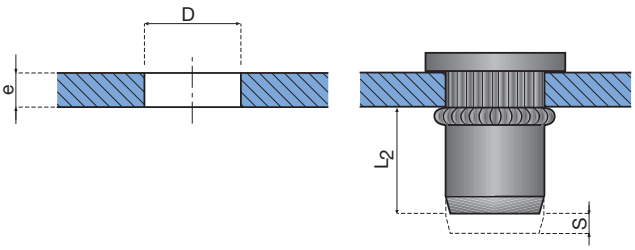

For the products shown in Blue we recommend the use of **RIVNUT®*plus*** 2330 7, page 15.

d	Thickness e	Hole $D^{+0,1}$	B	E	S*	Open end L	Open end L_2*	Open end Product code	Closed end L	Closed end L_2*	Closed end Product code
M3	0.75 – 1.00	5	7	1.0	S = 2.2-e	8.8	6.0	2330 703 0100	13.1	10.3	2332 703 0100
	1.00 – 1.75	5	7	1.0	S = 3-e	9.6	6.0	2330 703 0175	13.9	10.3	2332 703 0175
	1.75 – 2.50	5	7	1.0	S = 3.7-e	10.4	6.0	2330 703 0250	14.7	10.3	2332 703 0250
	2.50 – 3.25	5	7	1.0	S = 4.6-e	11.2	6.0	2330 703 0325	15.5	10.3	2332 703 0325
M4	0.75 – 1.00	6	8	1.0	S = 2.2-e	9.2	6.3	2330 704 0100	14.2	11.3	2332 704 0100
	1.00 – 1.75	6	8	1.0	S = 3-e	10.0	6.3	2330 704 0175	15.0	11.3	2332 704 0175
	1.75 – 2.50	6	8	1.0	S = 3.7-e	10.8	6.3	2330 704 0250	15.8	11.3	2332 704 0250
	2.50 – 3.25	6	8	1.0	S = 4.6-e	11.6	6.3	2330 704 0325	16.6	11.3	2332 704 0325
M5	0.50 – 1.00	7	10**	1.0	S = 3-e	12.0	8.0	2330 705 0010	17.6	14.6	2332 705 0100
	1.00 – 2.00	7	10**	1.0	S = 4-e	13.0	8.0	2330 705 0020	18.7	14.6	2332 705 0200
	2.00 – 3.00	7	10**	1.0	S = 5-e	14.0	8.0	2330 705 0030	19.8	14.6	2332 705 0300
	3.00 – 4.00	7	10**	1.0	S = 6-e	15.0	8.0	2330 705 0040	20.9	14.6	2332 705 0400
M6	0.70 – 1.50	9	13**	1.5	S = 3.5-e	14.5	10.0	2330 706 0015	22.0	17.0	2332 706 0150
	1.50 – 3.00	9	13**	1.5	S = 5-e	16.0	10.0	2330 706 0030	23.6	17.0	2332 706 0300
	3.00 – 4.50	9	13**	1.5	S = 6.5-e	17.5	10.0	2330 706 0045	25.2	17.0	2332 706 0450
M8	1.00 – 2.00	11	16**	1.5	S = 5-e	17.0	10.8	2330 708 0020	25.0	18.8	2332 708 0200
	2.00 – 3.50	11	16**	1.5	S = 6.5-e	18.5	10.8	2330 708 0035	26.5	18.8	2332 708 0350
	3.50 – 5.00	11	16**	1.5	S = 8-e	20.0	10.8	2330 708 0050	28.0	18.8	2332 708 0500
M10	1.00 – 1.50	13	16	2.0	S = 4.5-e	20.8	15.0	2330 710 0150	30.7	24.9	2332 710 0150
	1.50 – 3.00	13	16	2.0	S = 6-e	22.4	15.0	2330 710 0300	32.3	24.9	2332 710 0300
	3.00 – 4.50	13	16	2.0	S = 7.5-e	24.0	15.0	2330 710 0450	33.9	24.9	2332 710 0450
	4.50 – 6.00	13	16	2.0	S = 9-e	25.6	15.0	2330 710 0600	35.5	24.9	2332 710 0600

* Dimensions S and L_2 are indicative values. The difference in length S depends on the material thickness and is used as the setting tool stroke.
** 9 mm in 23327 M5 (closed), 11 mm in 23327 M6 (closed), 14 mm in 23327 M8 (closed).
Dimensions in mm. Surface treatment: 8µ Zinc/Nickel with clear passivate (ROHS Compliant), 200/400 hours Salt Spray Resistance
Other dimensions and variants can be supplied on request.

RIVNUT® *Steel blind rivet nuts/ Extending the* RIVNUT®*plus range*

Round body, linear knurls in grip range, countersunk head

Types 2331 7 open and 2333 7 closed



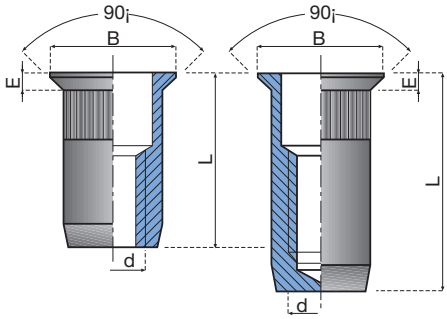

Advantages:

- Increased turning resistance
- Suitable for soft components (aluminium, plastic,...)
- Very small head projection
- High crimping force
- Screw length can be varied (open end)
- Splash-proof (closed end)

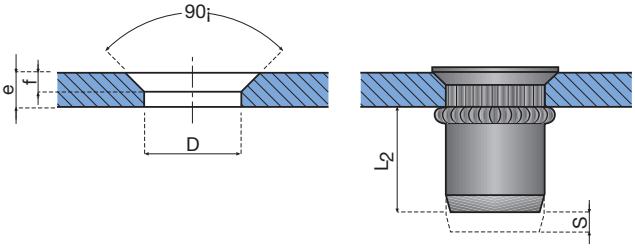

For the products shown in Blue we recommend the use of **RIVNUT®*plus*** 3436 7, page 15, which does not require any countersinking of the workpiece.

d	Thickness e	Hole $D^{+0,1}$	f	B	E	S*	Open end L	Open end L_2*	Open end Product code	Closed end L	Closed end L_2*	Closed end Product code
M3	1.00 – 1.75	5	1.0	7	1.1	S = 3.2-e	8.8	6.0	2331 703 0175	13.1	10.3	2333 703 0175
	1.75 – 2.50	5	1.2	7	1.3	S = 4-e	9.6	6.0	2331 703 0250	13.9	10.3	2333 703 0250
	2.50 – 3.25	5	1.2	7	1.3	S = 4.7-e	10.4	6.0	2331 703 0325	14.7	10.3	2333 703 0325
M4	1.00 – 1.75	6	1.0	8	1.1	S = 3.2-e	9.2	6.3	2331 704 0175	14.2	11.3	2333 704 0175
	1.75 – 2.50	6	1.2	8	1.3	S = 4-e	10.0	6.3	2331 704 0250	15.0	11.3	2333 704 0250
	2.50 – 3.25	6	1.2	8	1.3	S = 4.7-e	10.8	6.3	2331 704 0325	15.8	11.3	2333 704 0325
M5	1.00 – 2.00	7	1.0	9	1.1	S = 4-e	11.6	8.5	2331 705 0200	17.7	14.6	2333 705 0200
	2.00 – 3.00	7	1.4	9	1.5	S = 5-e	12.7	8.5	2331 705 0300	18.8	14.6	2333 705 0300
	3.00 – 4.00	7	1.4	9	1.5	S = 6-e	13.8	8.5	2331 705 0400	19.9	14.6	2333 705 0400
	4.00 – 5.00	7	1.4	9	1.5	S = 7-e	14.9	8.5	2331 705 0500	21.0	14.6	2333 705 0500
M6	1.50 – 3.00	9	1.2	11	1.3	S = 5-e	15.0	10.0	2331 706 0300	22.0	17.0	2333 706 0300
	3.00 – 4.50	9	1.5	11	1.6	S = 6.5-e	16.6	10.0	2331 706 0450	23.6	17.0	2333 706 0450
	4.50 – 6.00	9	1.5	11	1.6	S = 8-e	18.2	10.0	2331 706 0600	25.2	17.0	2333 706 0600
	6.00 – 7.50	9	1.5	11	1.6	S = 9.5-e	19.8	10.0	2331 706 0750	26.8	17.0	2333 706 0750
M8	1.50 – 3.00	11	1.4	13	1.5	S = 6-e	16.5	11.5	2331 708 0300	24.8	19.8	2333 708 0300
	3.00 – 4.50	11	2.0	14	2.1	S = 7.5-e	18.1	11.5	2331 708 0450	26.4	19.8	2333 708 0450
	4.50 – 6.00	11	2.0	14	2.1	S = 9-e	19.7	11.5	2331 708 0600	28.0	19.8	2333 708 0600
	6.00 – 7.50	11	2.0	14	2.1	S = 10.5-e	21.3	11.5	2331 708 0750	29.6	19.8	2333 708 0750
M10	1.50 – 3.00	13	1.4	15	1.5	S = 6-e	20.4	15.0	2331 710 0300	30.3	24.9	2333 710 0300
	3.00 – 4.50	13	2.0	16	2.1	S = 7.5-e	22.0	15.0	2331 710 0450	31.9	24.9	2333 710 0450
	4.50 – 6.00	13	2.0	16	2.1	S = 9-e	23.6	15.0	2331 710 0600	33.5	24.9	2333 710 0600

* Dimensions S and L_2 are indicative values. The difference in length S depends on the material thickness and is used as the setting tool stroke.
Note: Countersink angle 90°. the optimum countersink depth f is slightly less than E.
Dimensions in mm. Surface treatment: 8 µ Zinc/Nickel with clear passivate (ROHS Compliant), 200/400 hours Salt Spray Resistance
Other dimensions and variants can be supplied on request.

RIVNUT®US *Steel blind rivet nuts*

Round body, plain, flat head with Unified threads

Types S4 open and S4B closed



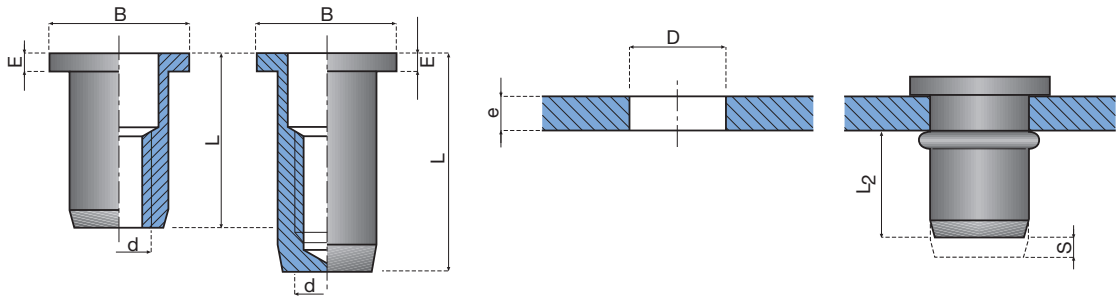

Advantages:

- Imperial sizes
- high crimping force
- screw length can be varied (open end)
- splash-proof (closed end)

Thread d	Grip Range	Min Hole Dia D.	B	E	S*	Open end			Closed end		
						L	L2	Product Code	L	L2	Product Code
4-40 UNC-3B	0.010 - 0.060	0.156	0.270	0.025	0.115	0.370	0.230	S4-60	0.525	0.385	S4B60
	0.060 - 0.085	0.156	0.270	0.025	0.140	0.395	0.230	S4-85	0.550	0.385	S4B85
	0.085 - 0.110	0.156	0.270	0.025	0.170	0.425	0.230	S4-110	0.575	0.390	S4B110
	0.110 - 0.135	0.156	0.270	0.025	0.195	0.450	0.230	S4-135	0.605	0.385	S4B135
	0.135 - 0.160	0.156	0.270	0.025	0.220	0.475	0.230	S4-160	0.630	0.385	S4B160
	0.160 - 0.185	0.156	0.270	0.025	0.250	0.505	0.230	S4-185	0.660	0.385	S4B185
6-32 UNC-3B	0.010 - 0.075	0.190	0.325	0.032	0.138	0.470	0.300	S6-75	0.657	0.490	S6B75
	0.075 - 0.120	0.190	0.325	0.032	0.185	0.532	0.315	S6-120	0.657	0.440	S6B120
	0.120 - 0.160	0.190	0.325	0.032	0.230	0.532	0.270	S6-160	0.782	0.520	S6B160
	0.160 - 0.200	0.190	0.325	0.032	0.272	0.594	0.290	S6-200	0.782	0.480	S6B200
	0.200 - 0.240	0.190	0.325	0.032	0.315	0.657	0.310	S6-240	0.782	0.435	S6B240
	0.240 - 0.280	0.190	0.325	0.032	0.357	0.719	0.330	S6-280	0.844	0.455	S6B280
8-32 UNC-3B	0.010 - 0.075	0.222	0.357	0.032	0.138	0.470	0.300	S8-75	0.657	0.490	S8B75
	0.075 - 0.120	0.222	0.357	0.032	0.185	0.532	0.315	S8-120	0.657	0.440	S8B120
	0.120 - 0.160	0.222	0.357	0.032	0.230	0.532	0.270	S8-160	0.782	0.520	S8B160
	0.160 - 0.200	0.222	0.357	0.032	0.275	0.657	0.350	S8-200	0.782	0.475	S8B200
	0.200 - 0.240	0.222	0.357	0.032	0.320	0.657	0.305	S8-240	0.907	0.555	S8B240
	0.240 - 0.280	0.222	0.357	0.032	0.347	0.719	0.340	S8-280	0.907	0.530	S8B280
10-32 UNF-3B	0.010 - 0.080	0.251	0.406	0.038	0.151	0.569	0.380	S10-80	0.819	0.630	S10B80
	0.080 - 0.130	0.251	0.406	0.038	0.204	0.632	0.390	S10-130	0.881	0.640	S10B130
	0.130 - 0.180	0.251	0.406	0.038	0.250	0.679	0.390	S10-180	0.929	0.640	S10B180
	0.180 - 0.230	0.251	0.406	0.038	0.308	0.741	0.395	S10-230	0.991	0.645	S10B230
	0.230 - 0.280	0.251	0.406	0.038	0.355	0.788	0.395	S10-280	1.038	0.645	S10B280
	0.280 - 0.330	0.251	0.406	0.038	0.412	0.835	0.385	S10-330	1.085	0.630	S10B330
1/4-20 UNC-3B	0.020 - 0.080	0.333	0.475	0.058	0.175	0.683	0.450	S25-80	0.995	0.760	S25B80
	0.080 - 0.140	0.333	0.475	0.058	0.237	0.745	0.450	S25-140	1.058	0.760	S25B140
	0.140 - 0.200	0.333	0.475	0.058	0.300	0.808	0.450	S25-200	1.120	0.760	S25B200
	0.200 - 0.260	0.333	0.475	0.058	0.367	0.870	0.445	S25-260	1.183	0.755	S25B260
	0.260 - 0.320	0.333	0.475	0.058	0.430	0.933	0.445	S25-320	1.245	0.755	S25B320
	0.320 - 0.380	0.333	0.475	0.058	0.492	0.995	0.445	S25-380	1.308	0.755	S25B380
5/16-18 UNC-3B	0.030 - 0.125	0.414	0.665	0.062	0.245	0.812	0.505	S31-125	1.249	0.940	S31B125
	0.125 - 0.200	0.414	0.665	0.062	0.320	0.987	0.555	S31-200	1.343	0.960	S31B200
	0.200 - 0.275	0.414	0.665	0.062	0.397	0.999	0.540	S31-275	1.405	0.950	S31B275
	0.275 - 0.350	0.414	0.665	0.062	0.472	1.094	0.560	S31-350	1.499	0.965	S31B350
	0.350 - 0.425	0.414	0.665	0.062	0.545	1.187	0.580	S31-425	1.593	0.985	S31B425
	0.425 - 0.500	0.414	0.665	0.062	0.622	1.249	0.565	S31-500	1.655	0.975	S31B500
3/8-16 UNC-3B	0.030 - 0.115	0.491	0.781	0.088	0.259	0.932	0.585	S37-115	1.369	1.020	S37B115
	0.115 - 0.200	0.491	0.781	0.088	0.343	1.026	0.595	S37-200	1.463	1.030	S37B200
	0.200 - 0.285	0.491	0.781	0.088	0.426	1.119	0.605	S37-285	1.556	1.040	S37B285
	0.285 - 0.370	0.491	0.781	0.088	0.510	1.213	0.615	S37-370	1.650	1.050	S37B370
	0.370 - 0.455	0.491	0.781	0.088	0.588	1.306	0.630	S37-455	1.744	1.065	S37B455
	0.455 - 0.540	0.491	0.781	0.088	0.677	1.400	0.635	S37-540	1.838	1.075	S37B540
1/2-13 UNC-3B	0.050 - 0.150	0.626	0.906	0.085	0.301	0.991	0.605	S50-150	1.413	1.030	S50B150
	0.150 - 0.250	0.626	0.906	0.085	0.401	1.116	0.630	S50-250	1.538	1.055	S50B250
	0.250 - 0.350	0.626	0.906	0.085	0.501	1.226	0.640	S50-350	1.647	1.060	S50B350
	0.350 - 0.450	0.626	0906	0.085	0.600	1.335	0.650	S50-450	1.756	1.070	S50B450

Dimensions in inches.
* Dimensions S and L_2 are indicative values. The difference in length S depends on the material thickness and is used as the setting tool stroke.
Surface treatment: 8µ zinc and yellow passivate (Non-ROHS Compliant). Other dimensions and variants can be supplied on request.
**Details of setting tools on request.

RIVNUT®US *Steel blind rivet nuts*

Round body, plain, countersunk head with Unified threads

Types S4 open and S4B closed

Advantages:

- Imperial sizes
- high crimping force
- screw length can be varied (open end)
- splash-proof (closed end)



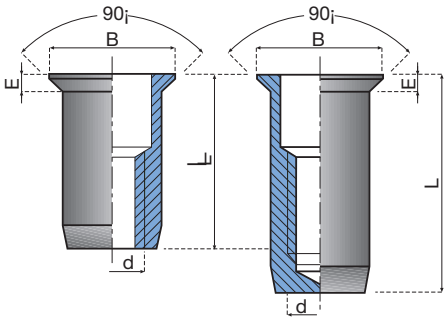

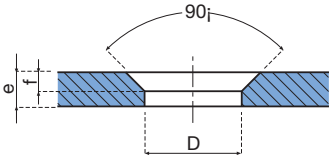

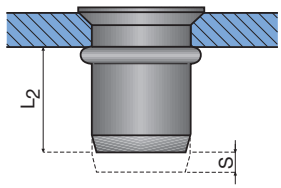

Thread d	Grip Range	Min Hole Dia D.	B	E	S*	Open end			Closed end		
						L	L^2	Product Code	L	L^2	Product Code
4-40 UNC-3B	0.050 - 0.081	0.156	0.263	0.051	0.135	0.370	0.235	S4-81	0.525	0.390	S4B81
	0.081 - 0.106	0.156	0.263	0.051	0.160	0.395	0.235	S4-106	0.550	0.390	S4B106
	0.106 - 0.131	0.156	0.263	0.051	0.185	0.420	0.235	S4-131	0.575	0.390	S4B131
	0.131 - 0.156	0.156	0.263	0.051	0.215	0.450	0.235	S4-156	0.600	0.390	S4B156
	0.156 - 0.181	0.156	0.263	0.051	0.240	0.475	0.235	S4-181	0.625	0.390	S4B181
	0.181 - 0.206	0.156	0.263	0.051	0.265	0.500	0.235	S4-206	0.650	0.390	S4B206
6-32 UNC-3B	0.065 - 0.106	0.190	0.323	0.063	0.175	0.500	0.325	S6-106	0.687	0.510	S6B106
	0.106 - 0.161	0.190	0.323	0.063	0.220	0.500	0.280	S6-161	0.687	0.465	S6B161
	0.161 - 0.201	0.190	0.323	0.063	0.267	0.562	0.295	S6-201	0.687	0.420	S6B201
	0.201 - 0.241	0.190	0.323	0.063	0.310	0.625	0.315	S6-241	0.812	0.505	S6B241
	0.241 - 0.281	0.190	0.323	0.063	0.355	0.625	0.270	S6-281	0.812	0.465	S6B281
	0.281 - 0.321	0.190	0.323	0.063	0.397	0.687	0.290	S6-321	0.844	0.455	S6B321
8-32 UNC-3B	0.065 - 0.106	0.222	0.355	0.063	0.175	0.500	0.325	S8-106	0.687	0.510	S8B106
	0.106 - 0.161	0.222	0.355	0.063	0.220	0.500	0.280	S8-161	0.687	0.465	S8B161
	0.161 - 0.201	0.222	0.355	0.063	0.272	0.562	0.290	S8-201	0.687	0.415	S8B201
	0.201 - 0.241	0.222	0.355	0.063	0.315	0.625	0.310	S8-241	0.875	0.560	S8B241
	0.241 - 0.281	0.222	0.355	0.063	0.362	0.687	0.325	S8-281	0.875	0.515	S8B281
	0.281 - 0.321	0.222	0.355	0.063	0.392	0.687	0.295	S8-321	0.875	0.485	S8B321
10-32 UNF-3B	0.065 - 0.116	0.251	0.391	0.065	0.183	0.578	0.395	S10-116	0.828	0.645	S10B116
	0.116 - 0.166	0.251	0.391	0.065	0.240	0.625	0.385	S10-166	0.875	0.635	S10B166
	0.166 - 0.216	0.251	0.391	0.065	0.287	0.687	0.400	S10-216	0.938	0.650	S10B216
	0.216 - 0.266	0.251	0.391	0.065	0.344	0.734	0.390	S10-266	0.984	0.640	S10B266
	0.266 - 0.316	0.251	0.391	0.065	0.396	0.781	0.385	S10-316	1.031	0.635	S10B316
	0.316 - 0.366	0.251	0.391	0.065	0.444	0.844	0.400	S10-366	1.094	0.650	S10B366
1/4-20 UNC-3B	0.089 - 0.151	0.333	0.529	0.089	0.247	0.687	0.440	S25-151	1.000	0.750	S25B151
	0.151 - 0.211	0.333	0.529	0.089	0.310	0.750	0.440	S25-211	1.062	0.750	S25B211
	0.211 - 0.271	0.333	0.529	0.089	0.372	0.812	0.440	S25-271	1.125	0.750	S25B271
	0.271 - 0.331	0.333	0.529	0.089	0.440	0.875	0.435	S25-331	1.187	0.750	S25B331
	0.331 - 0.391	0.333	0.529	0.089	0.502	0.937	0.435	S25-391	1.250	0.750	S25B391
	0.391 - 0.451	0.333	0.529	0.089	0.555	1.000	0.435	S25-451	1.312	0.760	S25B451
5/16-18 UNC-3B	0.106 - 0.181	0.414	0.656	0.104	0.304	0.844	0.540	S31-181	1.218	0.915	S31B181
	0.181 - 0.256	0.414	0.656	0.104	0.377	0.937	0.560	S31-256	1.312	0.935	S31B256
	0.256 - 0.331	0.414	0.656	0.104	0.450	1.000	0.550	S31-331	1.406	0.955	S31B331
	0.331 - 0.406	0.414	0.656	0.104	0.528	1.093	0.565	S31-406	1.468	0.940	S31B406
	0.406 - 0.481	0.414	0.656	0.104	0.601	1.156	0.555	S31-481	1.562	0.960	S31B481
	0.481 - 0.556	0.414	0.656	0.104	0.675	1.250	0.575	S31-556	1.625	0.950	S31B556
3/8-16 UNC-3B	0.125 - 0.211	0.491	0.770	0.124	0.358	0.938	0.580	S37-211	1.375	1.020	S37B211
	0.211 - 0.296	0.491	0.770	0.124	0.441	1.031	0.590	S37-296	1.468	1.030	S37B296
	0.296 - 0.381	0.491	0.770	0.124	0.525	1.125	0.600	S37-381	1.562	1.040	S37B381
	0.381 - 0.466	0.491	0.770	0.124	0.604	1.219	0.615	S37-466	1.656	1.050	S37B466
	0.466 - 0.551	0.491	0.770	0.124	0.687	1.312	0.625	S37-551	1.750	1.065	S37B551
	0.551 - 0.636	0.491	0.770	0.124	0.762	1.422	0.650	S37-636	1.859	1.090	S37B636
1/2-13 UNC-3B	0.125 - 0.226	0.626	0.906	0.124	0.374	0.984	0.610	S50-226	1.406	1.030	S50B226
	0.226 - 0.326	0.626	0.906	0.124	0.474	1.094	0.620	S50-326	1.515	1.040	S50B326
	0.326 - 0.426	0.626	0.906	0.124	0.578	1.218	0.640	S50-426	1.625	1.050	S50B426
	0.426 - 0.526	0.626	0906	0.124	0.677	1.312	0.635	S50-526	1.750	1.075	S50B526

Dimensions in inches.
* Dimensions S and L_2 are indicative values. The difference in length S depends on the material thickness and is used as the setting tool stroke.
Surface treatment: 8µ zinc and yellow passivate (Non-ROHS Compliant). Other dimensions and variants can be supplied on request.
**Details of setting tools on request.

RIVNUT®TW *Thin-Wall Steel Blind Rivet Nuts*

Round body, knurled, flat head

Type 'K' series, small head, open end



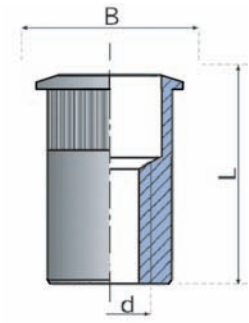

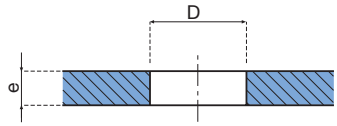

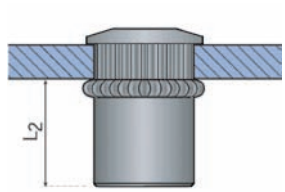

Advantages:

- wide grip range
- suitable for soft components (aluminium, plastic,...)
- low setting force
- screw length can be varied

Metric or Unified Threads

Thread Size d	Grip Range e	Hole Size D	Body Dia.	B (min)	L (max)	L_2*	Product code
M4 x 0.7 - 6H	0.50 - 2.00	6.80 - 6.95	6.75	7.50	11.45	6.7	ITRM4-2.0SK
	2.00 - 3.30	6.80 - 6.95	6.75	7.50	12.70	6.7	ITRM4-3.3SK
M5 x 0.8 - 6H	0.50 - 3.30	7.55 - 7.70	7.55	8.25	12.85	7.6	ITRM5-3.3SK
	3.30 - 5.70	7.55 - 7.70	7.55	8.25	15.65	7.6	ITRM5-5.7SK
M6 x 1.0 - 6H	0.70 - 4.20	9.95 - 10.10	9.90	10.65	15.50	8.6	ITRM6-4.2SK
	4.20 - 6.60	9.95 - 10.10	9.90	10.65	18.05	8.6	ITRM6-6.6SK
M8 x 1.25 - 6H	0.70 - 4.20	13.50 - 13.65	13.50	14.20	18.30	10.7	ITRM8-4.2SK
	4.20 - 7.90	13.50 - 13.65	13.50	14.20	21.20	10.7	ITRM8-7.9SK
M10 x 1.50 - 6H	0.70 - 4.20	13.50 - 13.65	13.50	14.20	18.30	10.7	ITRM10-4.2SK
	4.20 - 7.90	13.50 - 13.65	13.50	14.20	21.20	10.7	ITRM10-7.9SK
No.6 - 32UNC - 2B	0.020 - 0.080	0.266 - 0.272	0.265	0.295	0.450	0.265	ITR6-80SK
	0.080 - 0.130	0.266 - 0.272	0.265	0.295	0.500	0.265	ITR6-130SK
No.8 - 32UNC - 2B	0.020 - 0.080	0.266 - 0.272	0.265	0.295	0.450	0.265	ITR8-80SK
	0.080 - 0.130	0.266 - 0.272	0.265	0.295	0.500	0.265	ITR8-130SK
No.10 - 32UNC - 2B	0.020 - 0.130	0.297 - 0.303	0.296	0.326	0.505	0.300	ITR10-130SK
	0.130 - 0.225	0.297 - 0.303	0.296	0.326	0.615	0.300	ITR10-225SK
1/4 - 20UNC - 2B	0.027 - 0.165	0.391 - 0.397	0.390	0.420	0.610	0.340	ITR25-165SK
	0.165 - 0.260	0.391 - 0.397	0.390	0.420	0.710	0.340	ITR25-260SK
5/16 - 18UNC - 2B	0.027 - 0.165	0.531 - 0.538	0.530	0.560	0.720	0.420	ITR31-165SK
	0.165 - 0.312	0.531 - 0.538	0.530	0.560	0.835	0.420	ITR31-312SK
3/8 -16UNC - 2B	0.027 - 0.165	0.531 - 0.538	0.530	0.560	0.720	0.420	ITR37-165SK
	0.165 - 0.312	0.531 - 0.538	0.530	0.560	0.835	0.420	ITR37-312SK

Dimensions in mm. Imperial dimensions shown in Green. * Dimensions L_2 are indicative values.
Surface treatment: 8µ zinc and yellow passivate (Non-ROHS Compliant).
Other dimensions and variants can be supplied on request.

RIVNUT®TW *Thin-Wall Steel Blind Rivet Nuts*

Round body, knurled, large flat head

Type 'D' series, large head, open end



Metric or Unified Threads

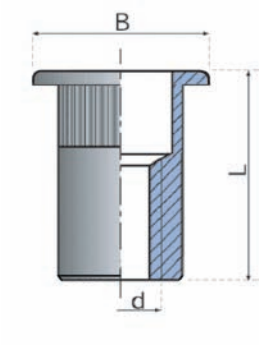

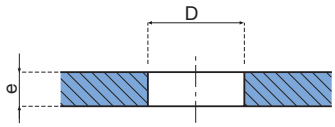

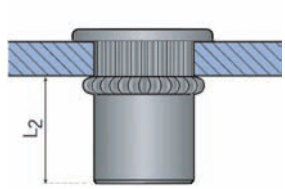

Advantages:

- wide grip range
- suitable for soft components (aluminium, plastic,...)
- low setting force
- screw length can be varied

Thread Size d	Grip Range e	Hole Size D	Body Dia.	B (nom)	L (max)	L_2*	Product code
M4 x 0.7 - 6H	0.50 - 2.00	6.80 - 6.95	6.75	9.50	11.70	6.5	ITRM4-2.0SD
	2.00 - 3.30	6.80 - 6.95	6.75	9.50	13.00	7.0	ITRM4-3.3SD
M5 x 0.8 - 6H	0.50 - 3.30	7.55 - 7.70	7.55	10.10	13.10	7.6	ITRM5-3.3SD
	3.30 - 5.70	7.55 - 7.70	7.55	10.10	15.90	7.6	ITRM5-5.7SD
M6 x 1.0 - 6H	0.70 - 4.20	9.95 - 10.10	9.90	12.70	15.75	8.6	ITRM6-4.2SD
	4.20 - 6.60	9.95 - 10.10	9.90	12.70	18.30	8.6	ITRM6-6.6SD
M8 x 1.25 - 6H	0.70 - 4.20	13.50 - 13.65	13.50	17.00	18.65	10.7	ITRM8-4.2SD
	4.20 - 7.90	13.50 - 13.65	13.50	17.00	21.60	10.7	ITRM8-7.9SD
M10 x 1.5 - 6H	0.70 - 4.20	13.50 - 13.65	13.50	17.00	18.65	10.7	ITRM10-4.2SD
	4.20 - 7.90	13.50 - 13.65	13.50	17.00	21.60	10.7	ITRM10-7.9SD
No.6 - 32UNC - 2B	0.020 - 0.080	0.266 - 0.272	0.265	0.375	0.460	0.275	ITR6-80SD
	0.080 - 0.130	0.266 - 0.272	0.265	0.375	0.510	0.275	ITR6-130SD
No.8 - 32UNC - 2B	0.020 - 0.080	0.266 - 0.272	0.265	0.375	0.460	0.275	ITR8-80SD
	0.080 - 0.130	0.266 - 0.272	0.265	0.375	0.510	0.275	ITR8-130SD
No.10 - 32UNC - 2B	0.020 - 0.130	0.297 - 0.303	0.296	0.400	0.515	0.300	ITR10-130SD
	0.130 - 0.225	0.297 - 0.303	0.296	0.400	0.625	0.300	ITR10-225SD
1/4 - 20UNC - 2B	0.027 - 0.165	0.391 - 0.397	0.390	0.500	0.620	0.340	ITR25-165SD
	0.165 - 0.260	0.391 - 0.397	0.390	0.500	0.720	0.340	ITR25-260SD
5/16 - 18UNC - 2B	0.027 - 0.165	0.531 - 0.538	0.530	0.670	0.735	0.420	ITR31-165SD
	0.165 - 0.312	0.531 - 0.538	0.530	0.670	0.850	0.420	ITR31-312SD
3/8 - 16UNC - 2B	0.027 - 0.165	0.531 - 0.538	0.530	0.670	0.735	0.420	ITR37-165SD
	0.165 - 0.312	0.531 - 0.538	0.530	0.670	0.850	0.420	ITR37-312SD

Dimensions in mm. Imperial dimensions shown in Green. * Dimensions L_2 are indicative values.
Surface treatment: 8µ zinc and yellow passivate (Non-ROHS Compliant).
Other dimensions and variants can be supplied on request.

RIVNUT® *Steel blind rivet nuts/ Extending the* RIVNUT®*plus range*

Hexagonal body, flat head

Types 2334 1 open and 2335 1 closed

Advantages:

- Very high turning resistance
- Suitable for soft components (aluminium, plastic,...)
- High crimping force
- Screw length can be varied (open end)
- Splash-proof (closed end)



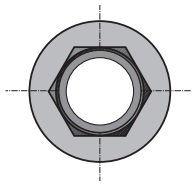

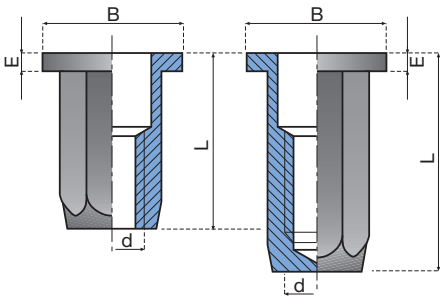

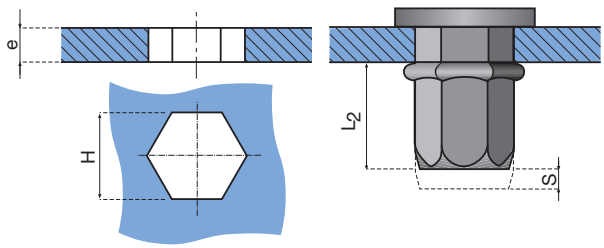

d	Thickness e	Hole $H^{+0,1}$/0	B	E	S*	Open end L	Open end L_2*	Open end Product code	Closed end L	Closed end L_2*	Closed end Product code
M4	0.5 – 2.0	6	9	1.0	S = 3.5-e	10	5	2334 104 0020	15	10	2335 104 0020*
M5	0.5 – 3.0	7	10	1.0	S = 5-e	14	9	2334 105 0030	20	14.7	2335 105 0030
M6	0.5 – 3.0	9	13	1.5	S = 5.2-e	16	10	2334 106 0030	23	17	2335 106 0030
M6	3.0 – 5.5	9	13	1.5	S = 7.5-e	19	10	2334 106 0055	/	/	/
M8	0.5 – 3.0	11	16	1.5	S = 5.5-e	18	11	2334 108 0030	26	19	2335 108 0030
M8	3.0 – 5.5	11	16	1.5	S = 8-e	21	11	2334 108 0055	29	19	2335 108 0055
M10	1.0 – 3.5	13	19	2.0	S = 6.1-e	23	15	2334 110 0035	33	25	2335 110 0035
M10	3.5 – 6.0	13	19	2.0	S = 8.7-e	25,7	15	2334 110 0060	/	/	/
M12	1.0 – 4.0	16	23	2.0	S = 7.7-e	27	17	2334 112 0030	/	/	/

* Dimensions S and L_2 are indicative values. The difference in length S depends on the material thickness and is used as the setting tool stroke.
Dimensions in mm.
Surface treatment: 8 µ Zinc/Nickel with clear passivate (ROHS Compliant), 200/400 hours Salt Spray Resistance
Other dimensions and variants can be supplied on request.

RIVNUT® *Steel blind rivet nuts/ Extending the* RIVNUT®*plus range*

Round body, plain, extra-small countersunk head

Type 3430 1 for holes with imperial dimensions

Advantages:

- Very small head projection without countersinking
- Screw length can be varied



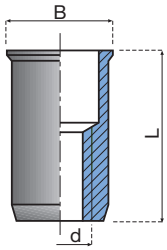

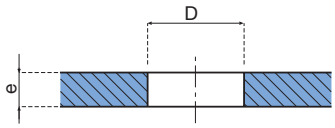

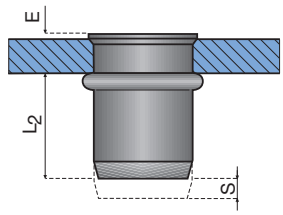

For the products shown in Blue we recommend the use of **RIVNUT®*plus*** 3436 7, page 15, where there are holes with metric dimensions.

d	Thickness e	Hole $D^{+0.1}$	B	$E_{max.}$	S*	L	L_2*	Product code
M3	0.5 – 1.5	4.7	5.2	0.4	S = 3-e	8.4	5.5	3430 103 0150
M4	0.5 – 2.0	6.4	6.7	0.5	S = 3.5-e	10.4	7.3	3430 104 0150
M5	0.5 – 3.0	7.1	7.5	0.6	S = 4.5-e	11.5	7.3	3430 105 0150
M6	0.7 – 3.0	9.5	10.2	0.6	S = 5.5-e	14.5	9.3	3430 106 0200
M8	0.8 – 4.5	10.5	11.3	0.7	S = 7.5-e	16.8	9.6	3430 108 0450

* Dimensions S and L_2 are indicative values. the difference in length S depends on the material thickness and is used as the setting tool stroke.
Dimensions in mm
Surface treatment: 8 µ Zinc/Nickel with clear passivate (ROHS Compliant), 200/400 hours Salt Spray Resistance
D = the imperial dimensions are expressed in mm.
Other dimensions and variants can be supplied on request.

RIVNUT® *Steel blind rivet nuts/ Extending the* RIVNUT®*plus range*

Round body, linear knurls in grip range, with extra-small countersunk head

Types 3436 7 open and 3437 7 closed

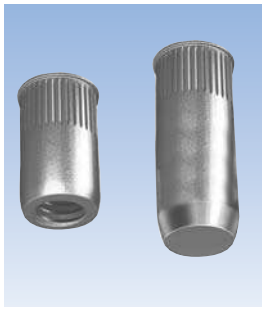

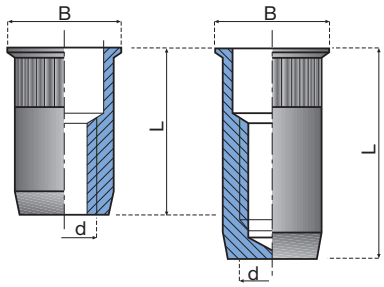

Advantages:

- Very small head projection without countersinking
- Increased turning resistance
- Suitable for soft components (aluminium, plastic,...)
- Screw length can be varied (open end)
- Splash-proof (closed end)

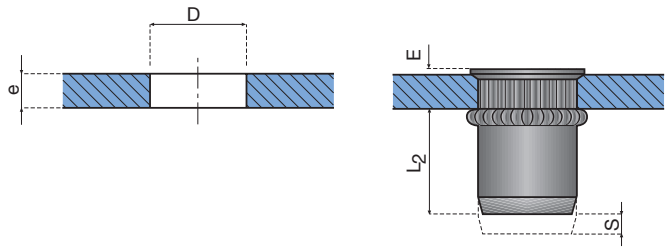

For the products shown in Blue we recommend the use of **RIVNUT®*plus*** 3436 7, page 15.

d	Thickness e	Hole $D^{+0.1}$	B	E_{max}	S*	Open end L	Open end L_2*	Open end Product code	Closed end L	Closed end L_2*	Closed end Product code
M3	0.7 – 1.5	5	6	0.4	S = 2.0-e	8.3	5.8	3436 703 0015	12.6	10.1	3437 703 0015
	1.5 – 3.0	5	6	0.4	S = 3.6-e	9.8	5.7	3436 703 0030	14.1	10	3437 703 0030
M4	0.7 – 2.5	6	7	0.4	S = 4.0-e	see page 15			15.3	10.9	3437 704 0025
	2.5 – 4.0	6	7	0.4	S = 5.6-e	11.9	5.9	3436 704 0040	16.9	10.9	3437 704 0040
M5	0.7 – 2.5	7	8	0.4	S = 4.2-e	see page 15			18.2	13.6	3437 705 0025
	2.5 – 4.0	7	8	0.4	S = 5.8-e	13.8	7.6	3436 705 0040	19.8	13.6	3437 705 0040
M6	0.8 – 3.0	9	10	0.4	S = 4.7-e	see page 15			18.7	5	3437 706 0030
	3.0 – 4.5	9	10	0.4	S = 6.3-e	15.3	8.6	3436 706 0045	20.3	13.6	3437 706 0045
	4.5 – 6.0	9	10	0.4	S = 7.9-e	16.9	8.6	3436 706 0060	21.9	13.6	3437 706 0060
M8	0.8 – 3.0	11	12	0.5	S = 4.8-e	see page 15			23.3	6	3437 708 0030
	3.0 – 4.5	11	12	0.5	S = 6.4-e	18.9	12	3436 708 0045	24.9	18	3437 708 0045
	4.5 – 6.0	11	12	0.5	S = 8.0-e	20.5	12	3436 708 0060	26.5	18	3437 708 0060
M10	0.8 – 3.0	13	14	0.5	S = 5.5-e	see page 15			28.3	22.3	3437 710 0030
	3.0 – 4.5	13	14	0.5	S = 7.1-e	21.9	14.3	3436 710 0045	29.9	22.3	3437 710 0045
	4.5 – 6.0	13	14	0.5	S = 8.7-e	23.5	14.3	3436 710 0060	31.5	22.3	3437 710 0060
M12	0.8 – 3.0	16	17	0.5	S = 5.9-e	24.2	17.8	3436 712 0030	33.2	26.8	3437 712 0030
	3.0 – 4.5	16	17	0.5	S = 7.5-e	25.8	17.8	3436 712 0045	34.8	26.8	3437 712 0045
	4.5 – 6.0	16	17	0.5	S = 9.1-e	27.4	17.8	3436 712 0060	36.4	26.8	3437 712 0060

* Dimensions S and L_2 are indicative values. The difference in length S depends on the material thickness and is used as the setting tool stroke.
Dimensions in mm
Surface treatment: 8 µ Zinc/Nickel with clear passivate (ROHS Compliant), 200/400 hours Salt Spray Resistance
Other dimensions and variants can be supplied on request.

RIVNUT® *Steel blind rivet nuts/ Extending the RIVNUT®plus range*

Hexagonal body, extra-small countersunk head

Types 3434 1 open and 3435 1 closed for holes with metric dimensions



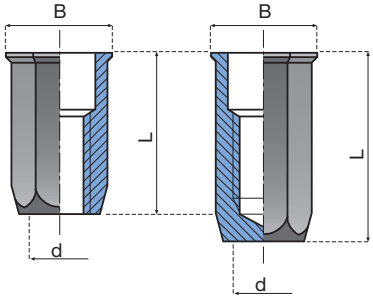

Advantages:

- Very high turning resistance
- Suitable for soft components (aluminium, plastic,...)
- Very small head projection without countersinking
- Screw length can be varied (open end)
- Splash-proof (closed end)

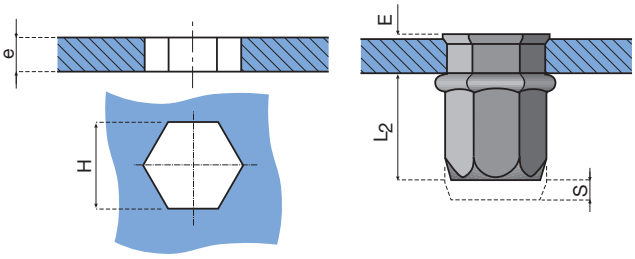

For the products shown in Blue we recommend the use of **RIVNUT®*plus*** 3434 1, page 15.

d	Thickness e	Hole H$^{+0.1}$	B	$E_{max.}$	S*	Open end L	Open end L_2*	Open end Product code	Closed end L	Closed end L_2*	Closed end Product code
M4	0.5 – 2.0	6	7.5	0.5	S = 3.5-e	10	6.2	3434 104 0020	17	13.2	3435 104 0020
M5	0.5 – 3.0	7	9.0	0.6	S = 4.5-e	14	9.0	3434 105 0030	20	15.0	3435 105 0030
M6	0.5 – 3.0	9	11.1	0.6	S = 5.5-e	16	10.2	3434 106 0030	23	17.2	3435 106 0030
M6	4 – 6	9	11.1	0.6	S = 8.5-e	19	10.2	3434 106 0060	/	/	/
M8	0.7 – 3.0	11	13.4	0.7	S = 5.2-e	18	12.5	3434 108 0030	28	22.5	3435 108 0030
M8	4 – 6	11	13.4	0.7	S = 8.2-e	21	16	3434 108 0060	/	/	/
M10	1 – 3.5	13	16	0.8	S = 6-e	22	16	3434 110 0035	/	/	/
M10	3 – 6.0	13	16	0.8	S = 8.6-e	25	16	3434 110 0060	/	/	/
M12	1 – 4.0	16	18.8	1.0	S = 7.5-e	25	16	3434 112 0040	/	/	/
M12	4 – 8	16	18.8	1.0	S = 12.5-e	27.7	16	3434 112 0080	/	/	/

* Dimensions S and L_2 are indicative values. The difference in length S depends on the material thickness and is used as the setting tool stroke.
Dimensions in mm. Surface treatment: 8µ Zinc/Nickel with clear passivate (ROHS Compliant), 200/400 hours Salt Spray Resistance.
Other dimensions and variants can be supplied on request.

Type 3432 1 for holes with imperial dimensions

Where possible we recommend the use of **RIVNUT®*plus*** for holes with metric dimensions.



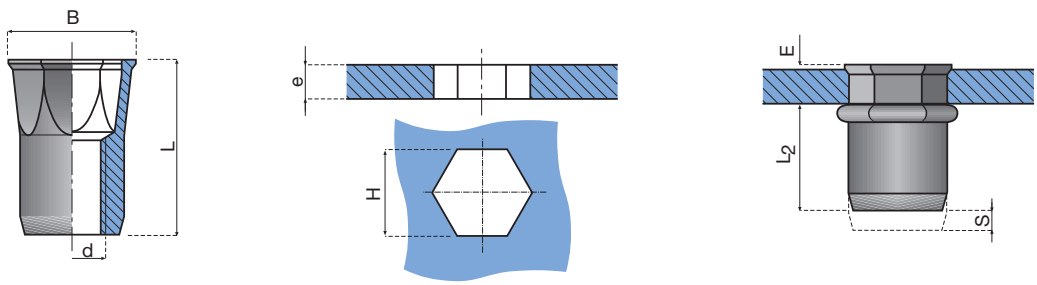

For the products shown in Blue we recommend the use of **RIVNUT®*plus*** 3434 1, page 15.

d	Thickness e	Hole H$^{+0.1}$	B	$E_{max.}$	S*	L	L_2*	Product code
M4	0.5 – 2.0	6.4	7.65	0.5	S = 4-e	10.4	6.8	3432 104 0020
M5	0.5 – 3.0	7.3	8.75	0.6	S = 5-e	11.8	7	3432 105 0030
M6	0.7 – 3.0	9.7	11.45	0.6	S = 5.2-e	14.6	9.5	3432 106 0030
M8	0.9 – 3.3	10.7	12.70	0.7	S = 5.9-e	16.0	10.2	3432 108 0033

* Dimensions S and L_2 are indicative values. The difference in length S depends on the material thickness and is used as the setting tool stroke. Dimensions in mm. H = The imperial dimensions are expressed in mm.
Surface treatment: 8µ Zinc/Nickel with clear passivate (ROHS Compliant), 200/400 hours Salt Spray Resistance
Other dimensions and variants can be supplied on request.

RIVNUT® *Steel blind rivet nuts/ Extending the* RIVNUT®*plus range*

Hexagonal body, extra-small countersunk head and optimised head projection

Types 3439 1 for holes with metric dimensions

Advantages:

- Very high turning resistance
- Suitable for soft components (aluminium, plastic,...)
- Very small head projection without countersinking
- Screw length can be varied



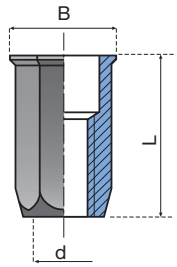

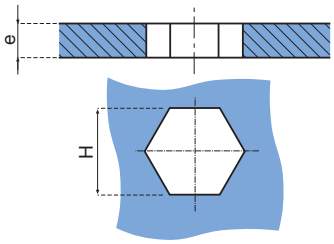

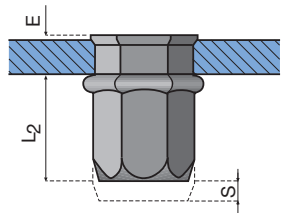

For the products shown in Blue we recommend the use of **RIVNUT®*plus*** 3434 1, page 15.

d	Thickness e	Hole $H^{+0,1}$	B	$E_{max.}$	S*	L	L_2*	Product code
M4	0.5 – 2.0	6	7.5	0.3	S = 3.5-e	9.5	6.2	3439 104 0679
M5	0.5 – 3.0	7	9.0	0.3	S = 4.5-e	13.5	9.0	3439 105 0612
M6	0.5 – 3.0	9	11.1	0.3	S = 5.5-e	15.5	10.2	3439 106 0613
M6	4.0 – 6.0	9	11.1	0.3	S = 8.5-e	18.5	10.2	3439 106 0680
M8	0.7 – 3.0	11	13.4	0.4	S = 5.2-e	17.5	12.5	3439 108 0614
M8	4.0 – 6.0	11	13.4	0.4	S = 8.2-e	20.5	12.5	3439 108 0620
M10	1.0 – 3.5	13	16	0.4	S = 6-e	21.5	16	3439 110 0618
M10	3.0 – 6.0	13	16	0.4	S = 8.6-e	24.5	16	3439 110 0619
M12	1.0 – 4.0	16	18.8	0.5	S = 7.5-e	24.5	16	3439 112 0616
M12	4.0 – 8.0	16	18.8	0.5	S = 12.5-e	27.2	16	3439 112 0615

* Dimensions S and L_2 are indicative values. The difference in length S depends on the material thickness and is used as the setting tool stroke. Dimensions in mm.
Surface treatment: 8 µ Zinc/Nickel with clear passivate (ROHS Compliant), 200/400 hours Salt Spray Resistance

Extra small countersunk heads were developed for applications in which the gap between the parts to be fitted must be reduced to zero for technical design or aesthetic reasons. It is not necessary to countersink the holes in this case.
However, they cannot be used as an alternative to countersunk heads:

- If the hole is not exactly within the tolerance margins
- If the hole material is ductile (to prevent the head from pulling through)
- If a screw has a tilting effect on the blind rivet nut.
  (See also page 9).

RIVNUT® *Stainless steel blind rivet nuts*

Round body, plain, flat head

Type 2330 8

Advantages:

- High crimping force
- High corrosion resistance
- Screw length can be varied
- Suitable for use in the food processing industry



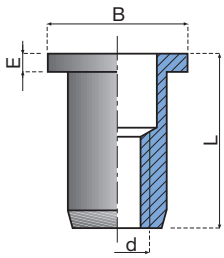

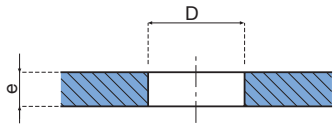

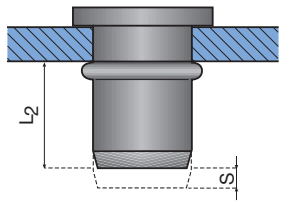

d	Thickness e	Hole $D^{+0.1}$	B	E	S*	L	L_2*	Product code
M4	0.80 – 1.75	6	8	1.0	S = 4.5-e	10.0	6.5	2330 804 0175
	1.75 – 2.50	6	8	1.0	S = 5.3-e	10.8	6.5	2330 804 0250
	2.50 – 3.25	6	8	1.0	S = 6-e	11.6	6.5	2330 804 0325
M5	0.80 – 2.00	7	9	1.0	S = 4.8-e	12.6	8.7	2330 805 0200
	2.00 – 3.00	7	9	1.0	S = 5.8-e	13.7	8.7	2330 805 0300
	3.00 – 4.00	7	9	1.0	S = 6.8-e	14.8	8.7	2330 805 0400
M6	0.80 – 1.50	9	12	1.5	S = 5-e	15.0	11.0	2330 806 0150
	1.50 – 3.00	9	12	1.5	S = 6.5-e	16.6	11.0	2330 806 0300
	3.00 – 4.50	9	12	1.5	S = 8-e	18.2	11.0	2330 806 0450
M8	0.80 – 1.50	11	14	1.5	S = 4.8-e	16.4	12.0	2330 808 0150
	1.50 – 3.00	11	14	1.5	S = 6.3-e	18.0	12.0	2330 808 0300
	3.00 – 4.50	11	14	1.5	S = 7.8-e	19.6	12.0	2330 808 0450
M10	1.00 – 3.00	13	16	2.0	S = 5.2-e	22.4	16.0	2330 810 0300
	3.00 – 4.50	13	16	2.0	S = 6.7-e	24.0	16.0	2330 810 0450
	4.50 – 6.00	13	16	2.0	S = 8.2-e	25.6	16.0	2330 810 0600

* Dimensions S and L_2 are indicative values. The difference in length S depends on the material thickness and is used the setting tool stroke.
Dimensions in mm. Other dimensions and variants can be supplied on request.
Material: Austenitic Stainless Steel

RIVNUT® *Stainless steel blind rivet nuts*

Round body, plain, countersunk head

Type 2331 8



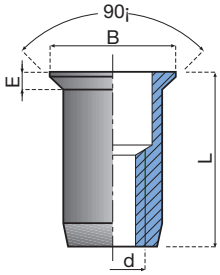

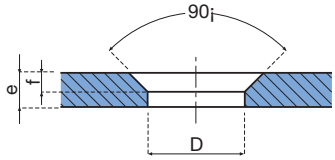

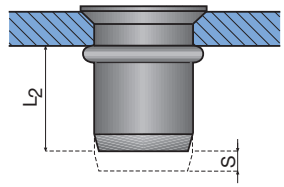

Advantages:

- Very small head projection
- High crimping force
- High corrosion resistance
- Screw length can be varied
- Suitable for use in the food processing industry

d	Thickness e	Hole $D^{+0,1}$	f	B	E	S*	L	L_2*	Product code
M4	1.30 – 1.75	6	1.3	8	1.4	S = 4.5-e	9.2	6.8	2331 804 0175
	1.75 – 2.50	6	1.3	8	1.4	S = 5.3-e	10.0	6.8	2331 804 0250
	2.50 – 3.25	6	1.3	8	1.4	S = 6-e	10.8	6.8	2331 804 0325
M5	1.50 – 2.00	7	1.5	9.6	1.6	S = 4.8-e	11.6	8.8	2331 805 0200
	2.00 – 3.00	7	1.5	9.6	1.6	S = 5.8-e	12.7	8.8	2331 805 0300
	3.00 – 4.00	7	1.5	9.6	1.6	S = 6.8-e	13.8	8.8	2331 805 0400
M6	1.50 – 3.00	9	1.5	11.7	1.6	S = 5-e	15.0	11.2	2331 806 0300
	3.00 – 4.50	9	1.5	11.7	1.6	S = 6.5-e	16.6	11.2	2331 806 0450
	4.50 – 6.00	9	1.5	11.7	1.6	S = 8-e	18.2	11.2	2331 806 0600
M8	1.50 – 3.00	11	1.5	13.5	1.6	S = 4.8-e	16.5	12.2	2331 808 0300
	3.00 – 4.50	11	1.5	13.5	1.6	S = 6.3-e	18.1	12.2	2331 808 0450
	4.50 – 6.00	11	1.5	13.5	1.6	S = 7.8-e	19.7	12.2	2331 808 0600
M10	1.50 – 3.00	13	1.5	15.5	1.6	S = 5.2-e	20.4	16.2	2331 810 0300
	3.00 – 4.50	13	1.5	15.5	1.6	S = 6.7-e	22.0	16.2	2331 810 0450
	4.50 – 6.00	13	1.5	15.5	1.6	S = 8.2-e	23.6	16.2	2331 810 0600

* Dimensions S and L_2 are indicative values. The difference in length S depends on the material thickness and is used as the setting tool stroke.
Note: Countersink angle 90°. The optimum countersink depth f is slightly less than E.
Dimensions in mm. Other dimensions and variants can be supplied on request.
Material: Austenitic Stainless Steel

RIVNUT® *Stainless steel blind rivet nuts*

Round body, linear knurls in grip range, flat head

Types 2330 6 open and 2332 6 closed



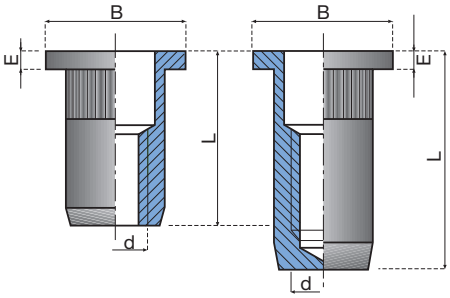

Advantages:

- Increased turning resistance
- Suitable for soft components (aluminium, plastic,...)
- High crimping force
- High corrosion resistance
- Screw length can be varied (open end)
- Splash-proof (closed end)
- Suitable for use in the food processing industry

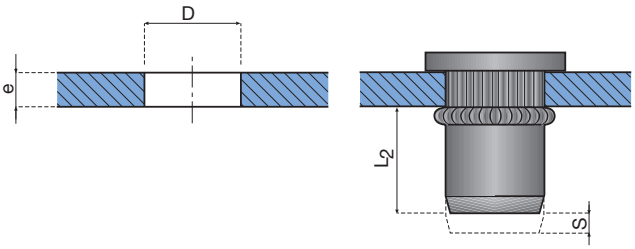

d	Thickness e	Hole D+0,1/0	B	E	S*	Open end L	Open end L_2*	Open end Product code	Closed end L	Closed end L_2*	Closed end Product code
M3	0.7 – 1.5	5	7	1	S = 2.4-e	9.3	5.9	2330 603 0015	13.6	10.2	2332 603 0015
	1.5 – 2.5	5	7	1	S = 3.5-e	10.4	5.9	2330 603 0025	14.7	10.2	2332 603 0025
M4	0.7 – 1.5	6	8	1	S = 2.6-e	9.8	6.2	2330 604 0015	14.8	11.2	2332 604 0015
	1.5 – 2.5	6	8	1	S = 3.6-e	10.6	6	2330 604 0025	15.6	11	2332 604 0025
	2.5 – 3.5	6	8	1	S = 4.7-e	11.7	6	2330 604 0035	16.7	11	2332 604 0035
M5	0.7 – 1.5	7	9	1	S = 2.8-e	11.8	8	2330 605 0015	17.8	14	2332 605 0015
	1.5 – 3.0	7	9	1	S = 4.5-e	13.3	7.8	2330 605 0030	19.3	13.8	2332 605 0030
	3.0 – 4.0	7	9	1	S = 5.6-e	14.4	7.8	2330 605 0040	20.4	13.8	2332 605 0040
M6	0.8 – 1.5	9	12	1.5	S = 3.1-e	13.3	8.7	2330 606 0015	18.3	13.7	2332 606 0015
	1.5 – 3.0	9	12	1.5	S = 4.7-e	14.8	8.6	2330 606 0030	19.8	13.6	2332 606 0030
	3.0 – 4.5	9	12	1.5	S = 6.3-e	16.4	8.6	2330 606 0045	21.4	13.6	2332 606 0045
	4.5 – 6.0	9	12	1.5	S = 7.9-e	18.2	8.6	2330 606 0060	23.2	13.6	2332 606 0060
M8	0.8 – 1.5	11	14	1.5	S = 3.2-e	15.3	10.6	2330 608 0015	21.3	16.6	2332 608 0015
	1.5 – 3.0	11	14	1.5	S = 4.7-e	16.8	10.6	2330 608 0030	22.8	16.6	2332 608 0030
	3.0 – 4.5	11	14	1.5	S = 6.3-e	18.4	10.6	2330 608 0045	24.4	16.6	2332 608 0045
	4.5 – 6.0	11	14	1.5	S = 7.9-e	20	10.6	2330 608 0060	26	16.6	2332 608 0060
M10	0.8 – 1.5	13	16	2	S = 3.9-e	19.8	13.9	2330 610 0015	27.8	21.9	2332 610 0015
	1.5 – 3.0	13	16	2	S = 5.5-e	21.4	13.9	2330 610 0030	29.4	21.9	2332 610 0030
	3.0 – 4.5	13	16	2	S = 7.1-e	23	13.9	2330 610 0045	31	21.9	2332 610 0045
	4.5 – 6.0	13	16	2	S = 8.7-e	24.6	13.9	2330 610 0060	32.6	21.9	2332 610 0060
M12	0.8 – 1.5	16	20	2	S = 3.8-e	23	17.2	2330 612 0015	32	26.2	2332 612 0015
	1.5 – 3.0	16	20	2	S = 5.4-e	24.6	17.2	2330 612 0030	33.6	26.2	2332 612 0030
	3.0 – 4.5	16	20	2	S = 7-e	26.2	17.2	2330 612 0045	35.2	26.2	2332 612 0045
	4.5 – 6.0	16	20	2	S = 8.6-e	27.8	17.2	2330 612 0060	36.8	26.2	2332 612 0060

* Dimensions S and L_2 are indicative values. The difference in length S depends on the material thickness and is used as the setting tool stroke.
Dimensions in mm. Other dimensions and variants can be supplied on request.
Material: Austenitic Stainless Steel

RIVNUT® *Stainless steel blind rivet nuts*

Round body, linear knurls in grip range, countersunk head

Types 2331 6 open and 2333 6 closed



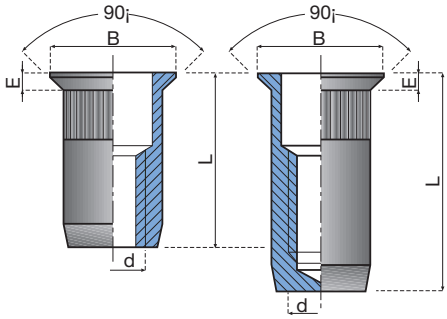

Advantages:

- Increased turning resistance
- Suitable for soft components (aluminium, plastic,...)
- Very small head projection
- High crimping force
- High corrosion resistance
- Screw length can be varied (open end)
- Splash-proof (closed end)
- Suitable for use in the food processing industry

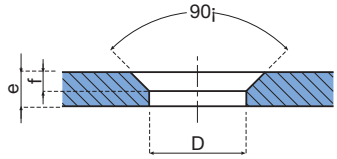

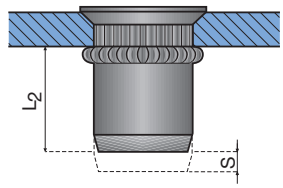

d	Thickness e	Hole D$^{+0,1}$	f	B	E	S*	Open end L	Open end L_2*	Open end Product code	Closed end L	Closed end L_2*	Closed end Product code
M3	1.3 – 2.0	5	0.9	7	1	S = 2.9-e	8.8	5.9	2331 603 0020	13.1	10.2	2333 603 0020
	2.0 – 3.0	5	0.9	7	1	S = 4-e	9.9	5.9	2331 603 0030	14.2	10.2	2333 603 0030
M4	1.3 – 2.0	6	0.9	8	1	S = 3.1-e	9.3	6.2	2331 604 0020	14.3	11.2	2333 604 0020
	2.0 – 3.0	6	0.9	8	1	S = 4.1-e	10.3	6.2	2331 604 0030	15.3	11.2	2333 604 0030
	3.0 – 4.0	6	0.9	8	1	S = 5.2-e	11.4	6.2	2331 604 0040	16.4	11.2	2333 604 0040
M5	1.5 – 2.0	7	0.9	9	1	S = 3.4-e	11.3	7.9	2331 605 0020	17.3	13.9	2333 605 0020
	2.0 – 3.0	7	0.9	9	1	S = 4.5-e	12.3	7.8	2331 605 0030	18.3	13.8	2333 605 0030
	3.0 – 4.0	7	0.9	9	1	S = 5.6-e	13.4	7.8	2331 605 0400	19.4	13.8	2333 605 0040
M6	1.5 – 3.0	9	0.9	11	1	S = 4.7-e	13.3	8.6	2331 606 0030	18.3	13.6	2333 606 0030
	3.0 – 4.0	9	0.9	11	1	S = 5.8-e	14.3	8.5	2331 606 0040	19.3	13.5	2333 606 0040
	4.0 – 5.0	9	0.9	11	1	S = 6.9-e	15.4	8.5	2331 606 0050	20.4	13.5	2333 606 0050
	5.0 – 6.0	9	0.9	11	1	S = 8-e	16.5	8.5	2331 606 0060	21.5	13.5	2333 606 0060
M8	1.5 – 3.0	11	1.4	14	1.5	S = 4.8-e	15.3	10.5	2331 608 0030	21.3	16.5	2333 608 0030
	3.0 – 4.0	11	1.4	14	1.5	S = 5.8-e	16.3	10.5	2331 608 0040	22.3	16.5	2333 608 0040
	4.0 – 5.0	11	1.4	14	1.5	S = 6.9-e	17.4	10.5	2331 608 0050	23.4	16.5	2333 608 0050
	5.0 – 6.0	11	1.4	14	1.5	S = 8-e	18.5	10.5	2331 608 0060	24.5	16.5	2333 608 0060
M10	1.5 – 3.0	13	1.4	16	1.5	S = 5.5-e	19.4	13.9	2331 610 0030	27.4	21.9	2333 610 0030
	3.0 – 4.5	13	1.4	16	1.5	S = 7.1-e	21	13.9	2331 610 0045	29	21.9	2333 610 0045
	4.5 – 6.0	13	1.4	16	1.5	S = 8.7-e	22.6	13.9	2331 610 0060	30.6	21.9	2333 610 0060
M12	1.5 – 3.0	16	1.4	19	1.5	S = 5.4-e	22.6	17.2	2331 612 0030	31.6	26.2	2333 612 0030
	3.0 – 4.5	16	1.4	19	1.5	S = 7-e	24.2	17.2	2331 612 0045	33.2	26.2	2333 612 0045
	4.5 – 6.0	16	1.4	19	1.5	S = 8.6-e	25.8	17.2	2331 612 0060	34.8	26.2	2333 612 0060

* Dimensions S and L_2 are indicative values. The difference in length S depends on the material thickness and is used as the setting tool stroke.
Note: Countersink angle 90°. The optimum countersink depth f is slightly less than E.
Dimensions in mm. Other dimensions and variants can be supplied on request.
Material: Austenitic Stainless Steel

RIVNUT® *Stainless steel blind rivet nuts*

Round body, plain, extra-small countersunk head

Type 3430 8 for holes with imperial dimensions and type 3436 8 for holes with metric dimensions

Advantages:

- Very small head projection without countersinking
- High corrosion resistance
- Screw length can be varied
- Suitable for use in the food processing industry

For a newly developed application we recommend the use of type 3436 8 for holes with metric dimensions.



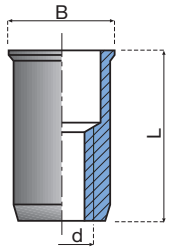

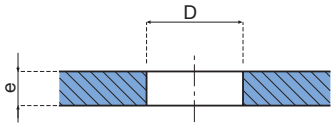

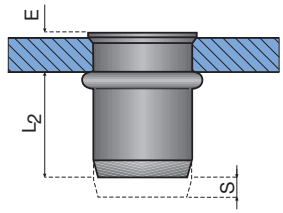

Type 3430 8

d	Thickness e	Hole $D^{+0,1}$	B	$E_{max.}$	S*	L	L_2*	Product code
M3	0.5 – 1.5	4.7	5.2	0.4	S = 2.8-e	8.4	5.5	3430 803 0150
M4	0.5 – 2.0	6.4	6.7	0.5	S = 3.5-e	10.4	7.3	3430 804 0200
M5	0.5 – 3.0	7.1	7.7	0.6	S = 4.5-e	11.6	7.3	3430 805 0300
M6	0.7 – 3.0	9.5	10.2	0.6	S = 5.7-e	14.5	9.3	3430 806 0300
M8	0.7 – 3.0	10.5	11.3	0.7	S = 5.7-e	16.8	10.5	3430 808 0300

Type 3436 8

d	Thickness e	Hole $D^{+0,1}$	B	$E_{max.}$	S*	L	L_2*	Product code
M4	0.5 – 1.5	6	7	0.5	S = 3-e	10	6.5	3436 804 0015
M5	0.5 – 2.0	7	8	0.6	S = 4.5-e	12	7	3436 805 0020
M6	0.7 – 3.0	9	10	0.6	S = 5-e	14	8.5	3436 806 0030
M8	0.7 – 3.0	11	12	0.7	S = 5-e	16	10.5	3436 808 0030

* Dimensions S and L_2 are indicative values. The difference in length S depends on the material thickness and is used as the setting tool stroke.
Dimensions in mm. Other dimensions and variants can be supplied on request.
Material: Austenitic Stainless Steel

RIVNUT® *Stainless steel blind rivet nuts*

Round body, linear knurls in grip range, with extra-small countersunk head

Types 3436 6 open and 3437 6 closed

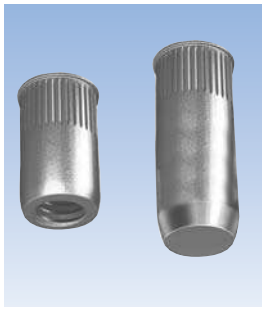

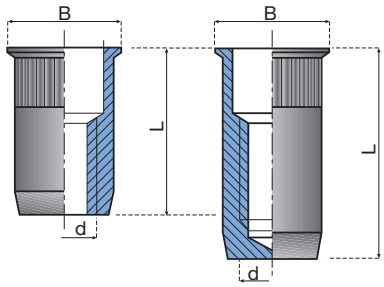

Advantages:

- Very small head projection without countersinking
- Suitable for soft components (aluminium, plastic,...)
- High corrosion resistance
- Screw length can be varied (open end)
- Splash-proof (closed end)
- Suitable for use in the food processing industry

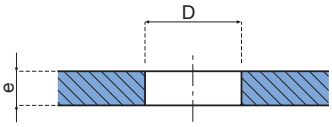

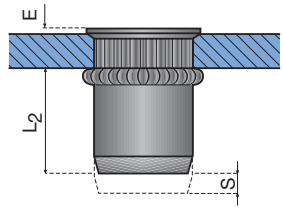

d	Thickness e	Hole $D^{+0,1}$	B	E_{max}	S*	Open end L	Open end L_2*	Open end Product code	Closed end L	Closed end L_2*	Closed end Product code
M3	0.7 – 1.5	5	6	0.4	S = 2.4-e	8.7	5.9	3436 603 0015	13	10.2	3437 603 0015
	1.5 – 2.5	5	6	0.4	S = 3.5-e	9.8	5.9	3436 603 0025	14.1	10.2	3437 603 0025
M4	0.7 – 1.5	6	7	0.4	S = 2.5-e	9.8	6.9	3436 604 0015	14.8	11.9	3437 604 0015
	1.5 – 2.5	6	7	0.4	S = 3.6-e	10.6	6.6	3436 604 0025	15.6	11.6	3437 604 0025
	2.5 – 3.5	6	7	0.4	S = 4.7-e	11.7	6.6	3436 604 0035	16.7	11.6	3437 604 0035
M5	0.8 – 2.0	7	8	0.4	S = 3.2-e	11.8	8.2	3436 605 0020	17.8	14.2	3437 605 0020
	2.0 – 3.0	7	8	0.4	S = 4.3-e	12.9	8.2	3436 605 0030	18.9	14.2	3437 605 0030
	3.0 – 4.0	7	8	0.4	S = 5.4-e	14	8.2	3436 605 0040	20	14.2	3437 605 0040
M6	0.8 – 1.5	9	10	0.5	S = 3.1-e	12.3	8.7	3436 606 0015	17.3	13.7	3437 606 0015
	1.5 – 3.0	9	10	0.5	S = 4.7-e	13.8	8.6	3436 606 0030	18.8	13.6	3437 606 0030
	3.0 – 4.5	9	10	0.5	S = 6.3-e	15.4	8.6	3436 606 0045	20.4	13.6	3437 606 0045
	4.5 – 6.0	9	10	0.5	S = 7.9-e	17	8.6	3436 606 0060	22	13.6	3437 606 0060
M8	0.8 – 1.5	11	12	0.5	S = 3.1-e	14.3	10.7	3436 608 0015	20.3	16.7	3437 608 0015
	1.5 – 3.0	11	12	0.5	S = 4.7-e	15.9	10.7	3436 608 0030	21.9	16.7	3437 608 0030
	3.0 – 4.5	11	12	0.5	S = 6.3-e	17.5	10.7	3436 608 0045	23.5	16.7	3437 608 0045
	4.5 – 6.0	11	12	0.5	S = 7.9-e	19.1	10.7	3436 608 0060	25.1	16.7	3437 608 0060
M10	0.8 – 1.5	13	14	0.5	S = 3.9-e	18.3	13.9	3436 610 0015	26.3	21.9	3437 610 0015
	1.5 – 3.0	13	14	0.5	S = 5.5-e	19.9	13.9	3436 610 0030	27.9	21.9	3437 610 0030
	3.0 – 4.5	13	14	0.5	S = 7.1-e	21.5	13.9	3436 610 0045	29.5	21.9	3437 610 0045
	4.5 – 6.0	13	14	0.5	S = 8.7-e	23.1	13.9	3436 610 0060	31.1	21.9	3437 610 0060
M12	0.8 – 1.5	16	17	0.5	S = 3.8-e	21.5	17.2	3436 612 0015	30.5	26.2	3437 612 0015
	1.5 – 3.0	16	17	0.5	S = 5.4-e	23.1	17.2	3436 612 0030	32.1	26.2	3437 612 0030
	3.0 – 4.5	16	17	0.5	S = 7.0-e	24.7	17.2	3436 612 0045	33.7	26.2	3437 612 0045
	4.5 – 6.0	16	17	0.5	S = 8.6-e	26.3	17.2	3436 612 0060	35.3	26.2	3437 612 0060

* Dimensions S and L_2 are indicative values. The difference in length S depends on the material thickness and is used as the setting tool stroke.
Dimensions in mm. Other dimensions and variants can be supplied on request.
Material: Austenitic Stainless Steel

RIVNUT® *Stainless steel blind rivet nuts*

Hexagonal body, flat head

Type 2334 8



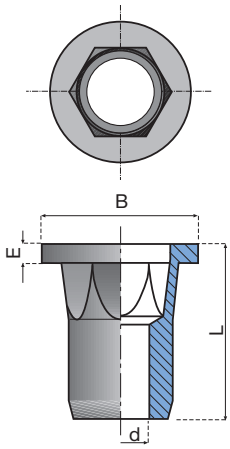

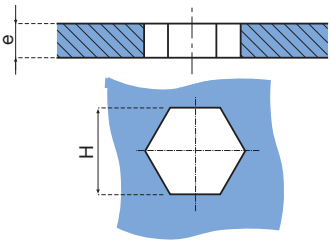

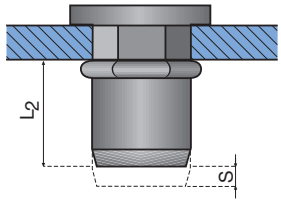

Advantages:

- Very high turning resistance
- Suitable for soft components (aluminium, plastic,...)
- High crimping force
- High corrosion resistance
- Screw length can be varied
- Suitable for use in the food processing industry

d	Thickness e	Hole $H^{+0.1}$	B	E	S*	L	L_2*	Product code
M4	0.5 – 2.0	6	9	1	S = 4.1-e	10.5	5.4	2334 804 0001
M5	0.5 – 3.0	7	10	1	S = 5-e	14	8	2334 805 0001
M6	0.5 – 3.0	9	11	1.5	S = 4.5-e	16	10	2334 806 0001
M8	0.7 – 3.0	11	14	1.5	S = 5.5-e	18	11	2334 808 0001
M10	1.0 - 3.5	13	17	17	S = 8.0-e	19.4	11	2334 810 0035

* Dimensions S and L_2 are indicative values. The difference in length S depends on the material thickness and is used as the setting tool stroke. Dimensions in mm. Other dimensions and variants can be supplied on request.
Material: Austenitic Stainless Steel

RIVNUT® *Stainless steel blind rivet nuts*

Hexagonal body, extra-small countersunk head

Type 3434 8



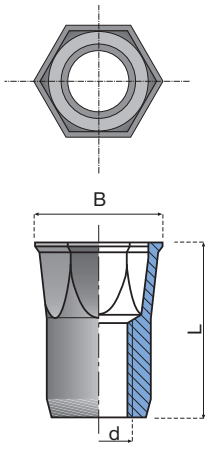

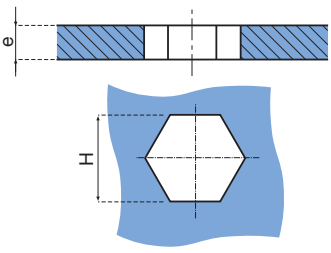

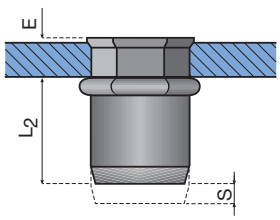

Advantages:

- Very high turning resistance
- Suitable for soft components (aluminium, plastic,...)
- Very small head projection without countersinking
- High corrosion resistance
- Screw length can be varied
- Suitable for use in the food processing industry

d	Thickness e	Hole $H^{+0.1}$	B	$E_{max.}$	S*	L	L_2*	Product code
M4	0.5 – 2.0	6	7.3	0.6	S = 3.5-e	10.6	6.8	3434 804 0020
M5	0.5 – 3.0	7	8.7	0.7	S = 3.8-e	11.6	7	3434 805 0020
M6	0.5 – 3.0	9	10.8	0.8	S = 5.2-e	14.5	9.5	3434 806 0025
M8	0.8 – 3.0	11	13.2	0.8	S = 5.5-e	15.8	10.2	3434 808 0030
M10	1.0 – 3.5	13	14.2	0.9	S = 8.0-e	19.4	11.5	3434 810 0035

* Dimensions S and L_2 are indicative values. The difference in length S depends on the material thickness and is used as the setting tool stroke. Dimensions in mm. Other dimensions and variants can be supplied on request.
Material: Austenitic Stainless Steel

RIVNUT® *Aluminium blind rivet nuts*

Round body, plain, flat head

Types 2330 0 open and 2332 0 closed

Advantages:

- High crimping force
- Lightweight
- High corrosion resistance
- Screw length can be varied (open end)
- Splash-proof (closed end)



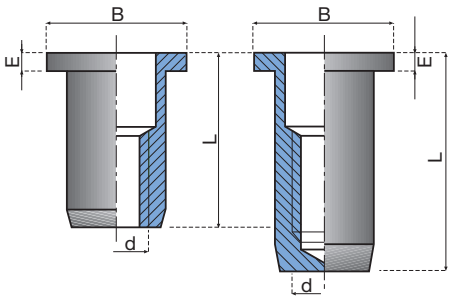

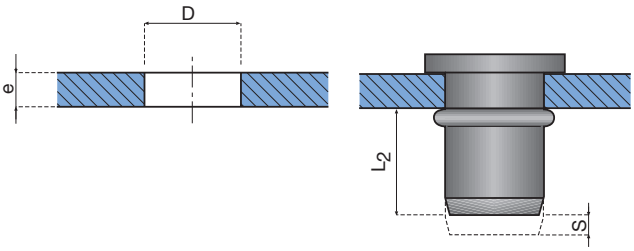

d	Thickness e	Hole $D^{+0.1}$	B	E	S*	Open end L	Open end L_2*	Open end Product code	Closed end L	Closed end L_2*	Closed end Product code
M3	0.25 – 2.0	5	7.5	1.0	S = 3-e	9.6	5.4	2330 003 0020	13.5	9.3	2332 003 0020
	2.0 – 3.5	5	7.5	1.0	S = 4.5-e	11.2	5.4	2330 003 0035	15.1	9.3	2332 003 0035
M4	0.25 – 2.5	6	9.0	1.0	S = 4.1-e	11.0	6.3	2330 004 0025	16.0	11.3	2332 004 0025
	2.5 – 4.5	6	9.0	1.0	S = 6.1-e	13.1	6.3	2330 004 0045	18.1	11.3	2332 004 0045
M5	0.25 – 3.0	7	10.0	1.0	S = 4.5-e	13.6	7.8	2330 005 0030	19.3	13.5	2332 005 0030
	3.0 – 5.5	7	10.0	1.0	S = 7-e	16.2	7.8	2330 005 0055	21.9	13.5	2332 005 0055
M6	0.5 – 3.0	9	13.0	1.5	S = 5-e	16.6	10.4	2330 006 0030	23.6	17.4	2332 006 0030
	3.0 – 5.5	9	13.0	1.5	S = 7.5-e	19.3	10.4	2330 006 0055	26.3	17.4	2332 006 0055
M8	0.5 – 3.0	11	16.0	1.5	S = 6-e	20.0	12.7	2330 008 0030	28.3	21.0	2332 008 0030
	3.0 – 5.5	11	16.0	1.5	S = 8.5-e	22.7	12.7	2330 008 0055	31.0	21.0	2332 008 0055
M10	0.8 – 3.5	13	19.0	2.0	S = 6.5-e	25.0	16.6	2330 010 0035	34.9	26.5	2332 010 0035
	3.5 – 6.0	13	19.0	2.0	S = 9-e	27.7	16.6	2330 010 0060	37.6	26.5	2332 010 0060
M12	0.5 – 1.5	16	23.0	2.0	S = 4.5-e	26.2	20.0	2330 012 0150	37.7	31.5	2332 012 0150
	1.5 – 3.0	16	23.0	2.0	S = 6-e	27.8	20.0	2330 012 0300	39.3	31.5	2332 012 0300
	3.0 – 4.5	16	23.0	2.0	S = 7.5-e	29.4	20.0	2330 012 0450	40.9	31.5	2332 012 0450
	4.5 – 6.0	16	23.0	2.0	S = 9-e	31.0	20.0	2330 012 0600	42.5	31.5	2332 012 0600

* Dimensions S and L_2 are indicative values. the difference in length S depends on the material thickness and is used as the setting tool stroke.
Dimensions in mm.
Other dimensions and variants can be supplied on request.

RIVNUT® *Aluminium blind rivet nuts*

Round body, plain, countersunk head

Types 2331 0 open and 2333 0 closed



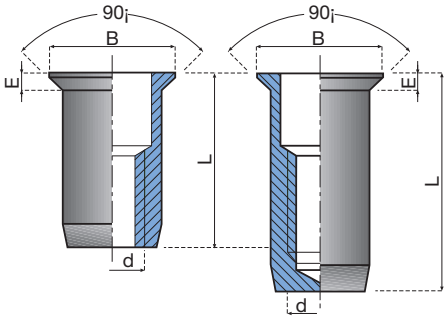

Advantages:

- Very small head projection
- High crimping force
- High corrosion resistance
- Lightweight
- Screw length can be varied (open end)
- Splash-proof (closed end)

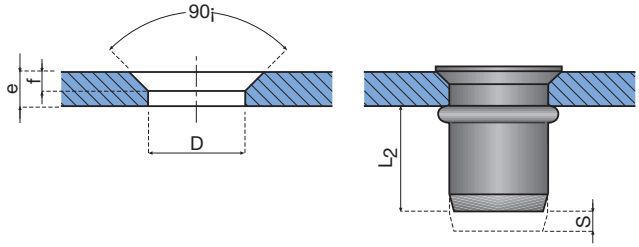

d	Thickness e	Hole D +0,1/0	f	B	E	S*	Open end L	Open end L_2*	Open end Product code	Closed end L	Closed end L_2*	Closed end Product code
M3	1,5 – 3,5	5	1,3	7,2	1,4	S = 4,5-e	10,2	5,6	2331 003 0035	14,1	9,5	2333 003 0035
	3,5 – 5,0	5	1,3	7,2	1,4	S = 6-e	11,8	5,6	2331 003 0050	15,7	9,5	2333 003 0050
M4	1,5 – 3,5	6	1,3	8,2	1,4	S = 4,8-e	11,3	6,5	2331 004 0035	16,3	11,5	2333 004 0035
	3,5 – 5,0	6	1,3	8,2	1,4	S = 6,3-e	12,9	6,5	2331 004 0050	17,9	11,5	2333 004 0050
M5	1,5 – 4,5	7	1,5	9,6	1,6	S = 6-e	14,2	7,8	2331 005 0045	19,4	13,5	2333 005 0045
	4,5 – 6,5	7	1,5	9,6	1,6	S = 8-e	16,3	7,8	2331 005 0065	22,0	13,5	2333 005 0065
M6	1,5 – 4,5	9	1,5	11,7	1,6	S = 6,3-e	16,6	10,4	2331 006 0045	23,6	17,4	2333 006 0045
	4,5 – 6,5	9	1,5	11,7	1,6	S = 8,3-e	18,7	10,4	2331 006 0065	25,7	17,4	2333 006 0065
M8	1,5 – 4,5	11	1,5	13,5	1,6	S = 7,5-e	20,1	12,7	2331 008 0045	28,4	21,0	2333 008 0045
	4,5 – 6,5	11	1,5	13,5	1,6	S = 9,5-e	22,2	12,7	2331 008 0065	30,5	21,0	2333 008 0065
M10	1,5 – 4,5	13	1,5	15,5	1,6	S = 7,5-e	24,0	16,6	2331 010 0045	33,9	26,5	2333 010 0045
	4,5 – 6,5	13	1,5	15,5	1,6	S = 9,5-e	26,1	16,6	2331 010 0065	36,0	26,5	2333 010 0065
M12	1,70 – 3,00	16	1,7	19,0	1,8	S = 6-e	25,8	20,0	2331 012 0300	37,3	31,5	2333 012 0300
	3,00 – 4,50	16	1,7	19,0	1,8	S = 7,5-e	27,4	20,0	2331 012 0450	38,9	31,5	2333 012 0450
	4,50 – 6,00	16	1,7	19,0	1,8	S = 9-e	29,0	20,0	2331 012 0600	40,5	31,5	2333 012 0600

* Dimensions S and L_2 are indicative values. The difference in length S depends on the material thickness and is used as the setting tool stroke.
Note: Countersink angle 90°. The optimum countersink depth f is slightly less than E.
Dimensions in mm.
Other dimensions and variants can be supplied on request.

Advantages of RIVNUT® HRT

In comparison to standard RIVNUT® blind rivet nuts:

- Increased tightening torque enables higher tension in the assembly
- Permits use of smaller dimensions
- Weight saving

Compared to others technologies:

- Blind fitting from one side only
- Automatic assembly options to reduce cycle time
- Automation of setting for 'difficult-to-access' locations on the assembly line
- Low investment
- Integration of assembly station into a volume production line
- No rework of threads required after assembly / painting
- 100 % controlled assembly is possible

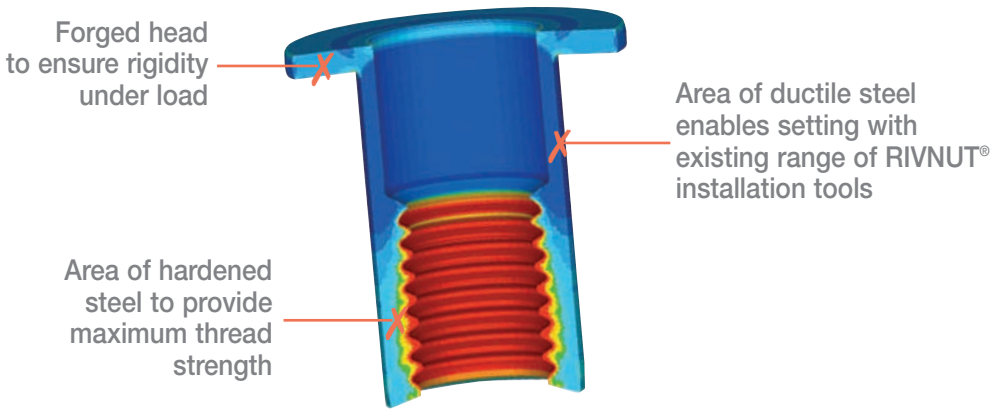

Product development of our existing RIVNUT® technology has resulted in our patented HRT process (**H**igh **R**esistance **T**hread) which uses advanced materials and processes to produce an enhanced, hardened, thread which significantly increases the mechanical performance of the blind rivet nut.

A lightweight, simple to install solution which allows use of fasteners up to and including grade 12.9 making it ideal for structural applications requiring higher joint tension and mechanical forces within the assembly.

Steel performance - Strength grade 12

The maximum acceptable tightening torque of a screw/nut assembly determines the preload developed in the joint. These values have been established in the standard ISO-898-1 / ISO-898-2(1) and require that in such a screwed joint it is desirable that when fatigue occurs the screw fails before the nut.
As the preload in an assembly increases so the use of progressively higher strength fasteners is necessary.
The table below shows the compatibility of steel **RIVNUT® HRT** with screws of grade 12.9.

	Screw grade12.9 / Nut grade 12 (N) ISO 898-1 / ISO 898-2		RIVNUT® HRT (N)
Thread diameter	Proof load of the screw (1)	Proof load of the nut	Proof load
M 6	19500	23100	**23100**
M 8	35500	42500	**42500**
M 10	56300	67300	**67300**
M 12	81800	100300	**100300**

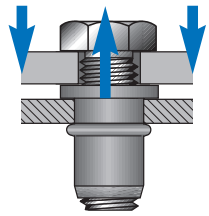

RIVNUT® HRT *Steel*

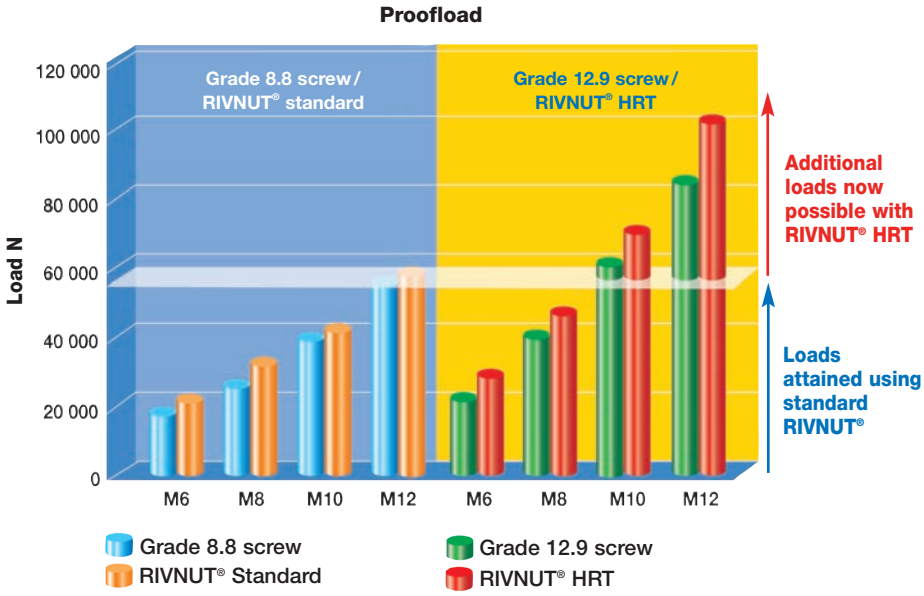

Technical features of RIVNUT® HRT *Steel*

- Material: Steel. A wide range of plating finishes are available including zinc or zinc nickel.
- Size range: M 6 to M 12.
- Body styles: **RIVNUT® HRT** is available only with an hexagonal body and flat head .
- Special shapes are available on request.
  A/F and hole dimensions are shown in the table below and are interchangeable with standard RIVNUT® products.

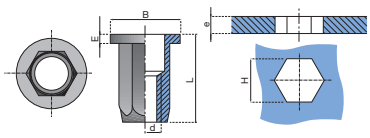

Thread diameter d	Grip range e	Hex Hole A/F H	Head diameter B	Head thickness E	Overall length L
M 6	1 - 3	9	14	1,5	18,6
M 8	1 - 3	11	17	1,5	23,6
M 10	1 - 3,5	13	20	2	27
M 12	1 - 4	16	24	2	33

Unit: mm

Applications

- **Use to replace traditional fastening methods for proof loads above 54 kN:**
  Examples: to replace welded fasteners used on excavators, public works equipment and structural joints using M 10 and M 12 screws in grade 12.9.

- **Reducing dimensions and weight of fastenings:**
  Example: for a fastening carrying a preload of 35 kN, the traditional solution was to use an M 12 screw in grade 8.8 with a corresponding nut.
  Today you can replace this with an M 8 screw in grade 12.9. Assembled with an M 8 **RIVNUT® HRT** blind rivet nut to carry the same load.

RIVNUT® HRT *Aluminium*

Advantages of RIVNUT® HRT

In comparison to standard RIVNUT® blind rivet nuts:

- Increased tightening torque enables higher tension in the assembly
- Permits use of smaller dimensions
- Weight saving
- Corrosion resistance

Compared to others technologies:

- Blind fitting from one side only
- Automatic assembly options to reduce cycle time
- Automation of setting for 'difficult-to-access' locations on the assembly line
- Low investment
- Ability to completely recycle aluminium products
- Integration of assembly station into a volume production line
- No rework of threads required after assembly / painting
- 100 % controlled assembly is possible

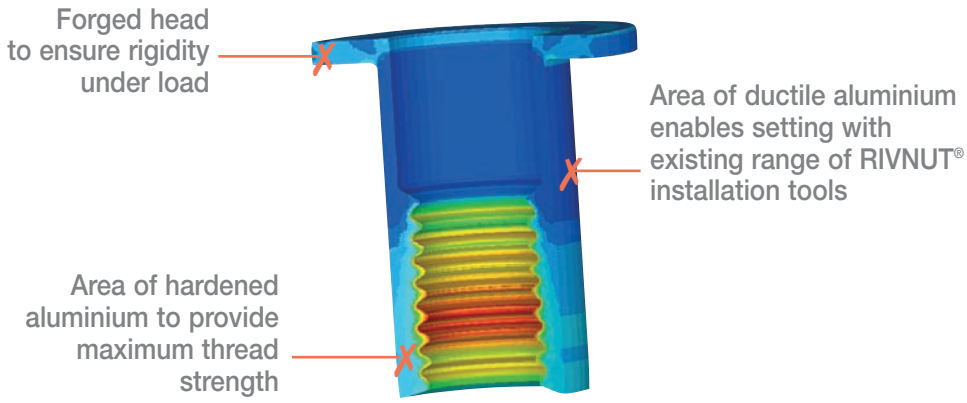

RIVNUT® HRT produced in aluminium is a combination of lightweight material and inherent strength. The ability to recycle fastenings is important in the design concept of many products; use of RIVNUT® HRT aluminium provides the many advantages of an aluminium fastening but is now combined with the strength required to be compatible with grade 8.8 screws. Highly corrosion resistant, this blind rivet nut can be used in aluminium, plastic or coated steel sheets for external applications.

Aluminium performance – Strength grade 8

The maximum acceptable tightening torque of a screw/nut assembly determines the preload developed in the joint.
These values have been established in the standard ISO-898-1/ ISO-898-2 (1) and require that in such a screwed joint it is desirable that when fatigue occurs the screw fails before the nut.
As the preload in an assembly increases so the use of progressively higher strength fasteners is necessary.
The table below shows the compatibility of **RIVNUT® HRT** aluminium with screws of grade 8.8.

	Screw grade 8.8 / Nut grade 8.8 (N) ISO 898-1 / ISO 898-2		RIVNUT® HRT (N)
Thread diameter	Proofload of the screw (1)	Proofload of the nut	Proofload
M 6	11600	16100	**17200**

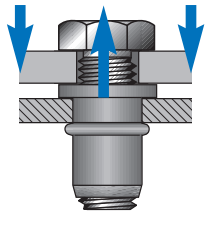

RIVNUT® HRT *Aluminium*

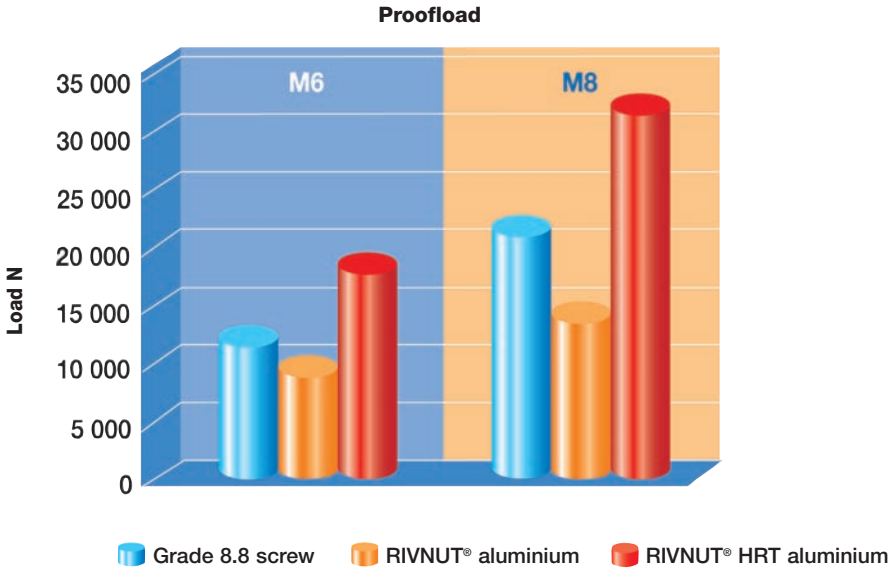

Aluminium RIVNUT® HRT *technical features*

- Material: aluminium 5056.
- Size range: M 6 to M 8.
- Body styles: **RIVNUT® HRT** is available only with an hexagonal body and flat head.
- Special shapes are available on request.
  A/F and hole dimensions are shown in the table below and are interchangeable with standard RIVNUT® products.

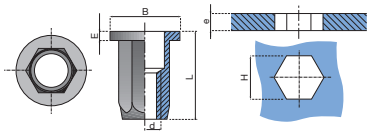

Thread diameter d	Grip range e	Hex Hole A/F H	Head diameter B	Head thickness E	Overall length L
M 6	0,5 - 3	9	14	1,5	18,6
M 8	0,5 - 3	11	17	1,5	23,6

Unit: mm

Applications

- **Weight saving RIVNUT® blind fastening compatible with screw grade 8.8:**
  Example: directly replace an hexagonal M 6 nut with HRT and achieve a weight reduction of 63 %.

- **Corrosion resistant solution for external applications:**
  Example: traffic signs; joining aluminium tubes on decorative architecture; replace expensive stainless steel fixings.

  High resistant and easy to recycle joints for mobile aluminium structures (car body construction, commercial vehicles, railed vehicles, ...)

RIVNUT® PN *(Plus-Nut®) Blind rivet nuts with slotted shank for ultimate pull-out force values*

The RIVNUT® PN (Plus-Nut®) blind rivet nut has been specially designed for integrating into plastic parts, hollow sections or thin-walled sheet steel requiring high pull-out forces. The slotted shank splays out into four “petals” on the blind side of the base material, thus offering a large bearing surface and ensuring maximum pull-out force.



Additional design benefits of RIVNUT® PN are:

- The RIVNUT® PN displays the largest clamping area of the range of blind rivet nuts for variable thicknesses of material
- Large clamping area to reinforce the workpiece
- Minimal radial stresses in the setting process to avoid the risk of breakage on soft or fragile materials
- Available in steel, aluminium and stainless steel
- Available in thread sizes M 4 to M 10 (non-metric/imperial measurements on request)

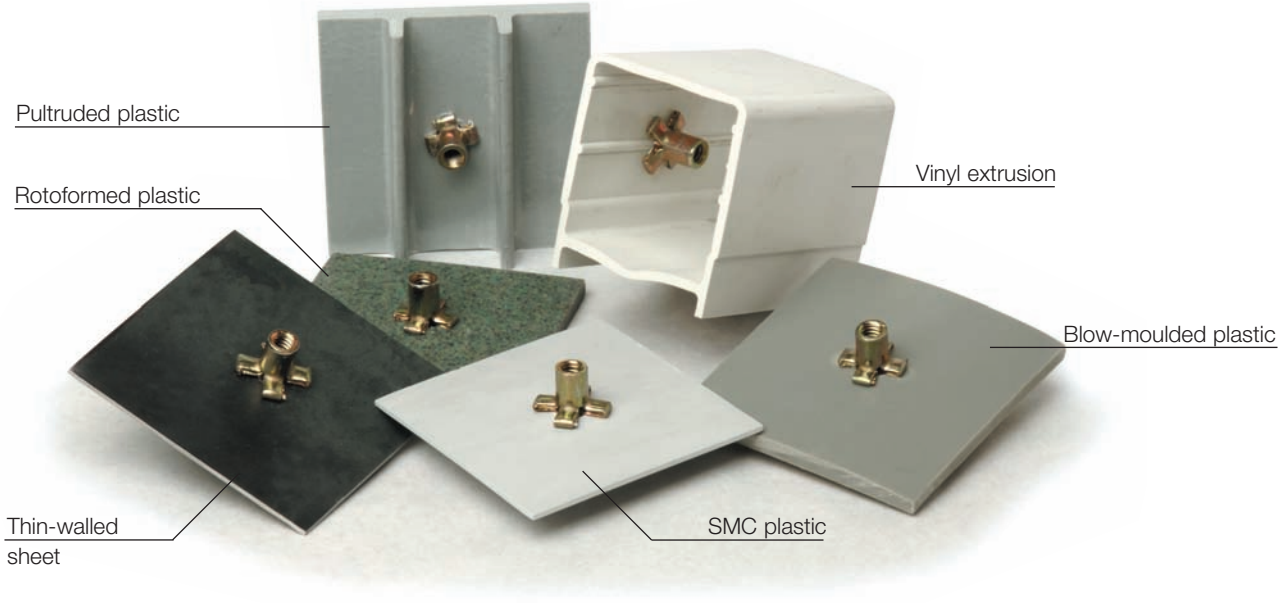

RIVNUT® PN *Pre-Bulbed (on request)*

The pre-bulbed RIVNUT® PN blind rivet nut features all the functions and advantages of the standard design. In addition, thanks to its gentle pre-slaying, the riveting can be done by a rotating mandrel (e.g. by an assembly tool for screws). Assembly is also possible using a simple, inexpensive manual key mounting tool, which can be supplied to the customer together with pre-bulbed RIVNUT® PN.



Impressive pull-out resistance

The following table compares pull-out forces for the standard RIVNUT® blind rivet nut and the RIVNUT® PN blind rivet nut in the materials illustrated above.

Blind rivet nut type	0.76 mm steel	2.92 mm vinyl extrusion	6.29 mm pultruded plastic	3.04 mm rotoformed plastic	1.65 mm SMC plastic	4.69 mm blow-moulded plastic
RIVNUT®	2.13 kN	0.9 kN	6.76 kN	0.1 kN	0.6 kN	1.25 kN
RIVNUT® PN	5.40 kN	2.75 kN	8.40 kN	0.7 kN	1.62 kN	3.22 kN

Note: Pull-out testing was conducted with a circular holding-down plate, dia. 65 mm. Böllhoff recommends testing under real application conditions in order to determine the exact pull-out force.

RIVNUT® PN *(Plus-Nut®) Blind rivet nuts with slotted shank, steel*

Technical data : dimensions

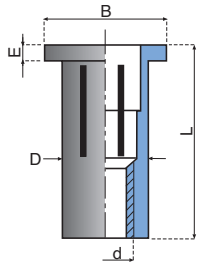

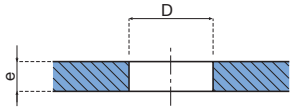

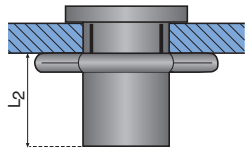

Thread tolerance : 6 H**, Material :** steel

RIVNUT® *PNP - Standard range :*

Plating: 8 µ Zinc with clear passivate (ROHS Compliant).

Thread	Grip range	Hole size		D	E	B	L	L2	Product code
d	e	Hmin	Hmax						
M5	0.5-3.0	7.48	7.62	7.47	0.96	12.7	22.0	9.9	6687 05 11 030
M6	0.5-5.0	8.8	8.93	8.79	1.5	15.9	26.9	12.8	6687 06 11 050
M8	0.5-5.0	11.11	11.50	11.1	1.57	19.0	30.5	14.5	6687 08 11 050

Dimensions in millimeters

RIVNUT® *PNC - Wide grip range :*

Plating: 8 µ Zinc with clear passivate (ROHS Compliant).

Thread	Grip range	Hole size		D	E	B	L	L2	Product code
d	e	Hmin	Hmax						
M4	0.5-3.8	6.13	6.25	6.12	0.96	11.1	17.6	8.6	6683 041 10 38
M5	0.5-4.45	7.48	8.93	7.47	0.96	12.7	22.0	9.9	6683 051 10 44
M6	0.5-7.1	8.8	8.93	8.79	1.5	15.9	26.9	12.8	6683 061 10 71
M8	0.5-7.1	11.11	11.50	11.1	1.57	19.0	30.5	14.5	6683 081 10 71
M10	0.5-7.1	13.07	13.26	13.06	2.24	22.2	33.2	15,8	6683 101 10 71

Dimensions in millimeters

Note 1 : RIVNUT® PNC also available in stainless steel or aluminium upon request.
Note 2 : others dimensions and variants upon request.

RIVNUT® *PNB - Pre-Bulbed range :*

Plating: 8 µ Zinc with clear passivate (ROHS Compliant).

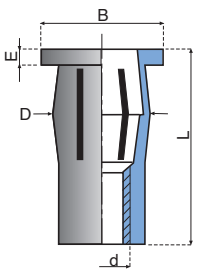

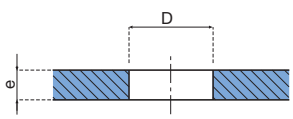

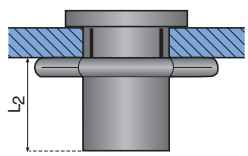

Thread	Grip range	Hole size		D	E	B	L	L2	Product code
d	e	Hmin	Hmax						
M6	0.5-7.1	9.8	9.93	9.76	1.5	15.9	26.2	12.8	6684 061 10 71

Dimensions in millimeters

Note 1 : Others dimensions upon request for RIVNUT® PNB .

RIVNUT® AV – *Blind rivet nuts for dampening applications*

The system

Our design specification was to produce a re-usable blind rivet nut with noise and vibration damping characteristics.

Our solution is the RIVNUT® AV blind rivet nut.

The RIVNUT® AV blind rivet nut consists of a metric threaded metal insert encased in an elastomer or thermoplastic elastomer body.

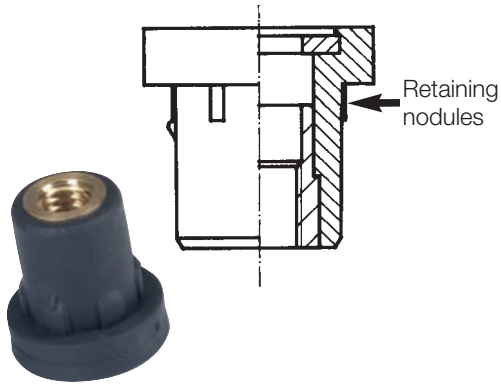

The principle

The RIVNUT® AV is an innovative solution for fastening load-bearing threaded inserts in thin-walled components and is ideal in applications where noise and vibration dampening is also required.

The RIVNUT® AV is inserted into the pilot hole from one side of the carrier component.





Retaining nodules beneath the flange secure the fastener in the workpiece prior to assembly. The threaded metal insert (brass on the standard version) is only attached to the body on its lower section so that when the mating screw is tightened this causes the nut body to bulge on the underside of the component to be fastened.

This is a reversible rivet fastening.

Versions – standard versions

The standard RIVNUT® AV is available in two basic versions.

- RIVNUT® AV with washer
- RIVNUT® AV without washer

Standard versions are available in four sizes: M 4, M 5, M 6 and M 8. Standard versions are available with various shank lengths, shank diameters, metal inserts, thread types, thread lengths, thread diameters, materials and colours. The metal inserts are also available in various materials and surface finishes.

If the component to be fastened is made from steel and has a pilot hole to DIN ISO 273 standard, a RIVNUT® AV without a washer should be used. If the component is made from plastic, aluminium or steel and has a slotted hole, a RIVNUT® AV with a washer should be used.

Versions – custom versions

In addition to the standard versions we can also manufacture special versions made to customer specifications.

Customers can choose a metal type for the insert which perfectly matches their fastening specifications and other requirements such as strength.

Customers can choose from a range of elastomers and thermoplastic elastomers to ensure that the soft fastener body has the continuous operating temperature, chemical resistance and insulation characteristics required.

RIVNUT® AV – *Blind rivet nuts for dampening applications*

Fastener materials

Metal insert and washer
Standard versions have threaded inserts made from brass. Inserts made from other metals with different strength specifications are also available.
Metal insert bodies are available with all known surface finishes.

The soft part of the fastener is made from various types of elastomer or thermoplastic elastomer depending on the thermal, mechanical and media resistance characteristics required.

The washers on RIVNUT® AV fitted with washers are punched from brass and have a zinc-plated surface finish. Other types of washer are available.

Thermoplastic elastomer body
Thermoplastic elastomer bodies are made from TPE-V which has the following characteristics:

TPE-V
- Good mechanical properties in the temperature range - 40° C to 120° C
- Good media resistance
- Low compression set

Elastomer body
Two types of elastomer are used on RIVNUT® AV with elastomer bodies: VMQ and EPDM.
Other types of elastomer (e.g. AEM and ECO) are also available.

VMQ
- Very good thermal resistance from - 80° C to + 200° C
- Excellent ageing resistance
- High resistance to oil and grease

EPDM
- Very good compression set rating
- Good chemical resistance
- Good resistance to mineral oils and greases
- Continuous operating temperature up to + 130° C

The advantages

- Optimum solution for fastening a load-bearing threaded insert to a thin-walled component
- The only reliable alternative for hollow components, housings and other components where access is only available from one side.
- Blind rivet technology replaces screw fasteners
- Vibration and noise dampening
- Electrical and thermal insulation
- Tolerance adjustment – Stress relief
  – Stresses caused by manufacturing technology (on component to be fastened)
  – Thermal expansion
  – Dynamic fastener (e.g. moves with the vehicle)
- Easy-to-fit. Setting (bulge clamping) takes place during the screwing process
- Easy-to-dismantle
- Allows full design flexibility thanks to variable parameters

RIVNUT® AV – *Blind rivet nuts for dampening applications*

Example applications – Automotive industry

Mounting for engine spoiler and side components BMW motor cycle

Mounting for active carbon filter VW Beetle

Compressor mounting Audi A6 allroad quattro





Example applications – All industrial sectors

Heating and air-conditioning plant

Electrical engineering and electronics:
Examples: fixing of printed circuit boards with electro-static isolation; mounting of sensitive measuring equipment; fixing of switchgear cabinets

Agricultural machinery:
Examples: tractors, combine harvesters ...

Gardening power tools, lawn mowers ...

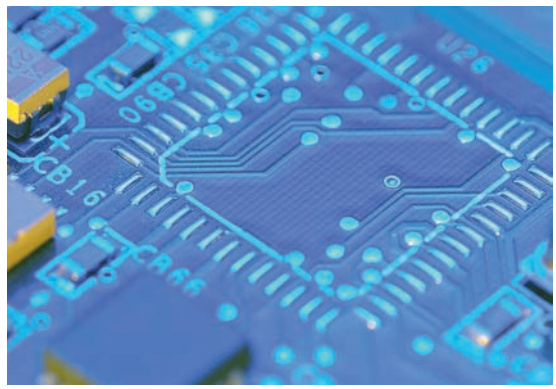



RIVNUT® AV – *Blind rivet nuts for dampening applications*

Technical information

Mating fasteners

The RIVNUT® AV thread is manufactured to standard commercial tolerances (6H as per ISO 68-1). The thread is designed to accept a standard commercial mating fastener and will therefore accept any of the widely available screw fasteners with a 6g tolerance.

Mechanical characteristics – Tightening torque

Size	Tightening torque max. (Nm)
M 4	2.0
M 5	2.0
M 6	4.5
M 8	7.0

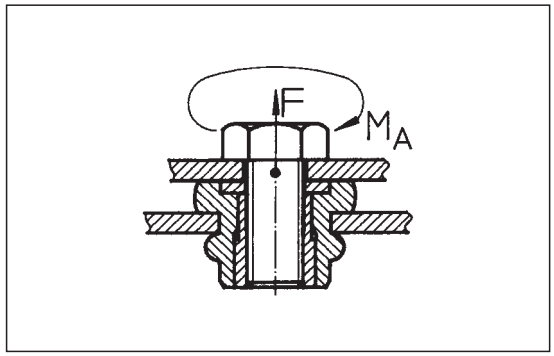

Mechanical characteristics – Axial test load

Size	Axial test load (N)
M 4	150
M 5	150
M 6	250
M 8	400

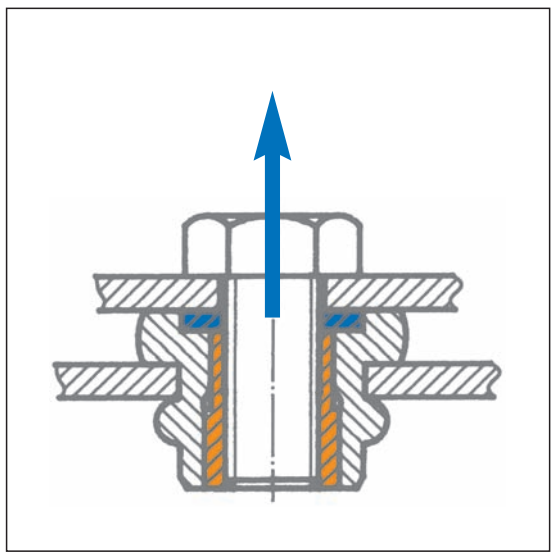

Maximum clamping bulge deformation (w)

Size	Max. clamping bulge deformation w (mm)
M 4	15
M 5	15
M 6	15.5
M 8	20.5

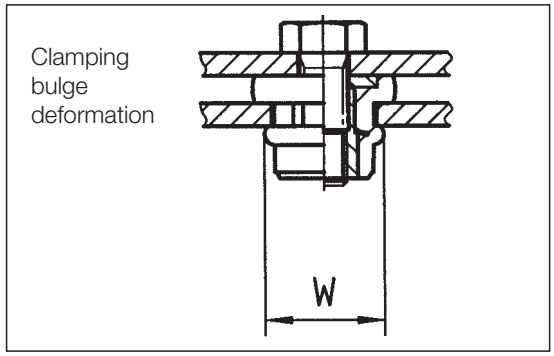

Versions

RIVNUT® AV with washer

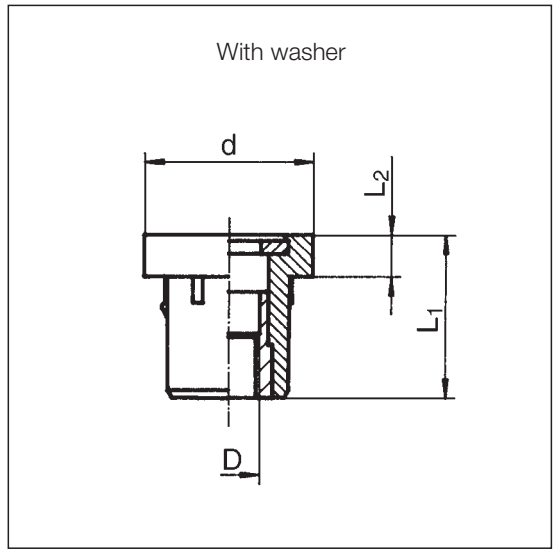

Product code	Type	D	d	L_1	L_2	Hole diameter D_1	Set length L	Grip range
2431 004 0300	with washer	M 4	15	17.7	3.7	10.3 + 0.2	9	0.5 – 3.0
2431 005 0300	with washer	M 5	15	17.7	3.7	10.3 + 0.2	9	0.5 – 3.0
2431 006 0300	with washer	M 6	18	19.3	4.3	13.0 + 0.2	10	0.5 – 3.0
2431 008 0300	with washer	M 8	22	21.6	5.6	16.0 + 0.2	11	0.5 – 3.0

Standard: Body: TPE-V, 64 Shore A, black; insert: brass; washer: zinc-plated brass

RIVNUT® AV special version

Product code	Type	D	d	L_1	L_2	Hole diameter D_1	Set length L	Grip range
2431 362 0300	with washer	6.2	18	19.3	4.3	13.0 + 0.2	10.0	0.5 – 3.0

Body: TPE-V, 55 Shore A, black; insert: without thread

RIVNUT® Elastic special version

Product code	Type	D	d	L_1	L_2	Hole diameter D_1	Set length L	Grip range
2439 001 0601	with washer	M 6	18	19.3	4.3	13.0 + 0.2	10.0	0.5 – 3.0

Insert and washer material: A 2

The values given above are correct to the best of our knowledge and are valid as typical standard values.
They are provided as a guide only and must not be used for specifications.
The standard value does not release users from their obligation to test products for their particular uses and production procedures.

Versions

RIVNUT® AV without washer

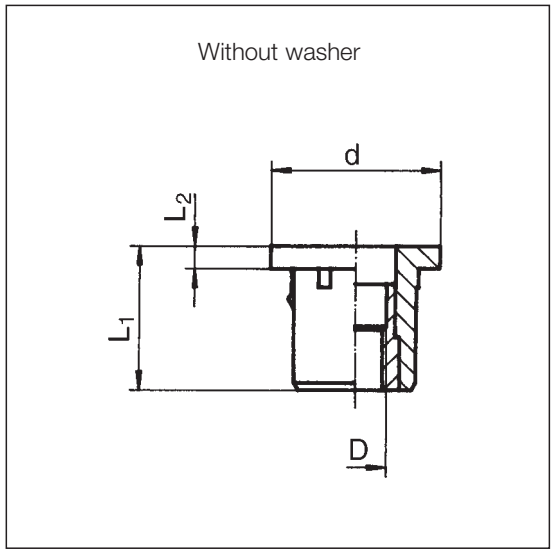

Product code	Type	D	d	L_1	L_2	Hole diameter D_1	Set length L	Grip range
2430 004 0300*	without washer	M 4	15	15.5	1.5	10.3 + 0.2	9	0.5 – 3.0
2430 005 0300*	without washer	M 5	15	15.5	1.5	10.3 + 0.2	9	0.5 – 3.0
2430 006 0300	without washer	M 6	18	17.0	2.0	13.0 + 0.2	10	0.5 – 3.0
2430 008 0300	without washer	M 8	22	19.0	3.0	16.0 + 0.2	11	0.5 – 3.0

* available on request
Standard: Body TPE-V, 64 Shore A, black; insert: brass

RIVNUT® AV special version

Product code	Type	D	d	L_1	L_2	Hole diameter D_1	Set length L	Grip range
2430 206 0300	without washer	M 6	18	17.0	2.0	13.0 + 0.2	10.0	0.5 – 3.0

Body: VMQ, 70 ±5 Shore A, black

The values given above are correct to the best of our knowledge and are valid as typical standard values.
They are provided as a guide only and must not be used for specifications.
The standard value does not release users from their obligation to test products for their particular uses and production procedures.

RIVSTUD® *Standard blind rivet studs*

Advantages of RIVSTUD® *blind rivet studs*

RIVSTUD® blind rivet studs allow the mating component to be prepositioned on the supporting part. This is particularly useful for heavy or large components or where the mountings are hidden.
These fastenings offer all the advantages of the other RIVNUT® ranges, i.e. ease and economy of installation, flexibility and environmental sustainability.

Examples of applications

Refrigeration plant, ventilation systems, air conditioning equipment, securing panels and hoses to vehicle chassis, rails in switch cabinets, exhausts or electrical components in motor vehicles.

Type 3722 7



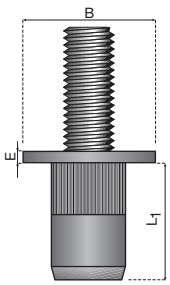

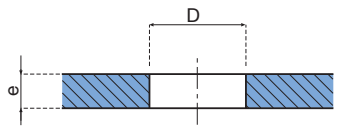

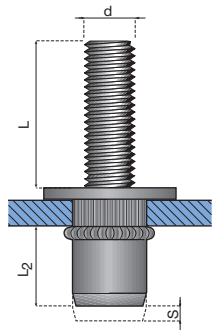

d	Thickness e	Hole $D^{+0.1}$	B	E	S*	L	L_1	L_2*	Product code
M5	0.5 – 3	7	10	1	S = 4.7-e	15	11	5.5	3722 705 0115
	0.5 – 3	7	10	1	S = 4.7-e	20	11	5.5	3722 705 0120
	0.5 – 3	7	10	1	S = 4.7-e	25	11	5.5	3722 705 0125
M6	0.5 – 3	9	13	1.5	S = 5.4-e	15	13	7.5	3722 706 0115
	0.5 – 3	9	13	1.5	S = 5.4-e	20	13	7.5	3722 706 0120
	0.5 – 3	9	13	1.5	S = 5.4-e	25	13	7.5	3722 706 0125
M8	0.5 – 3	11	16	1.5	S = 5.4-e	20	14	8.5	3722 708 0120
	0.5 – 3	11	16	1.5	S = 5.4-e	25	14	8.5	3722 708 0125

* Dimensions S and L_2 are indicative values. The difference in length S depends on the material thickness and is used as the setting tool stroke.
Dimensions in mm.

The setting process

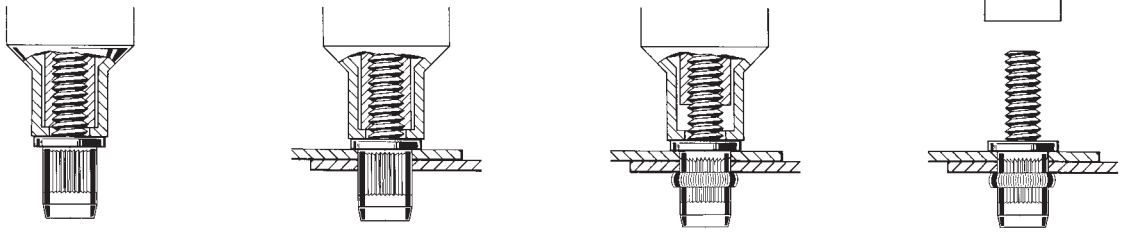

RIVSTUD® *Special designs of blind rivet studs*

Even more uses are opened up by RIVSTUD® *blind rivet studs in specially designed product variants*

On request, we can manufacture studs with the same options as the RIVSTUD® blind rivet nuts (imperial threads, zinc-nickel surface treatments, stainless steel with special surface treatments, studs with special chamfer end geometry).

- **RIVSTUD® blind rivet stud, coarse thread for assembly of plastic components by pushing or tapping into place.**



- **RIVSTUD® blind rivet stud, knurled, extra-small head. Very small or no head projection.**

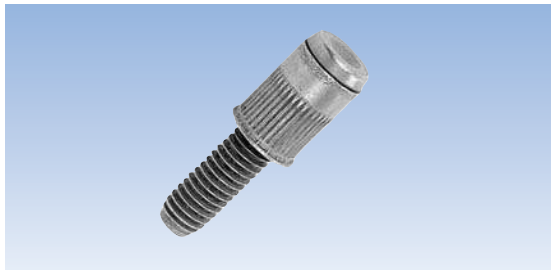

- **RIVSTUD® blind rivet stud, extra-large head to take higher mechanical loads.**



- **RIVSTUD® blind rivet stud, hexagonal body and flat head for increased turning resistance.**

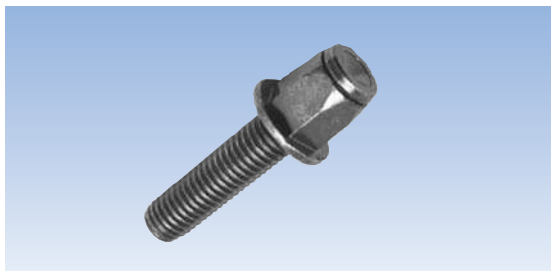

Captive screw with spacer function

The screws are pre-fitted to speed up assembly.

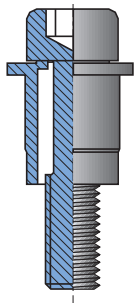



RIVNUT® *Special designs of blind rivet nuts*

As your partner in the development and manufacture of fastenings systems, we develop a large number of application-specific, purpose designed fasteners. Our work is carried out under the quality standards ISO 9001 and QS 9000. This chapter is intended only to give you a brief summary of what we can offer: additional functionality from the use of spray-on plastic parts, pre-assembled mechanically joined components, glued or welded parts etc.

Special designs of RIVNUT® *blind rivet nuts*

- **RIVNUT® with knurls on the body and under the extra-large head, this fastening provides improved mechanical properties in soft workpieces.**
  Guarantees the best match of RIVNUT® blind rivet nuts to plastic workpieces. A zinc-nickel surface treatment provides optimum corrosion resistance.

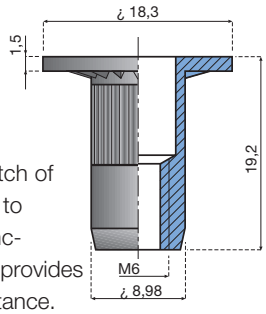



- **RIVNUT® hexagonal body, UNF 7/16 thread**
  For fastening motor vehicle safety belts, increased resistance to turning,very high mechanical loading capacity, a zinc-nickel surface treatment provides optimum corrosion resistance.

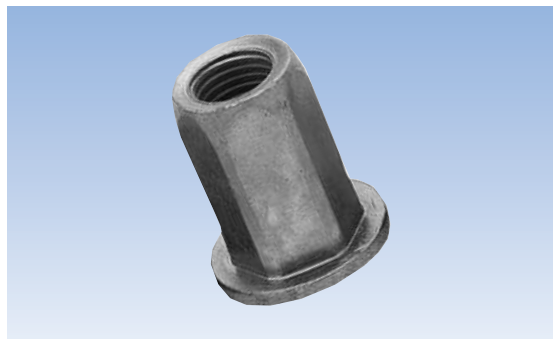

- **RIVNUT® extra-large head, Ø 45 mm, for a large bearing area**
  Ensures an even distribution of stresses in soft workpieces such as plastic.
  Black in colour for a pleasing appearance.
  The head is a captive press-on washer.



- **RIVNUT® blind rivet nut, round body,**
  a threaded rivet sleeve, installed using a press, used as a spacer or pillar.

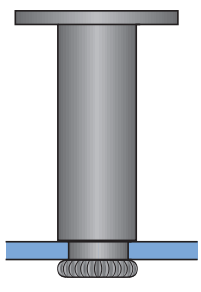

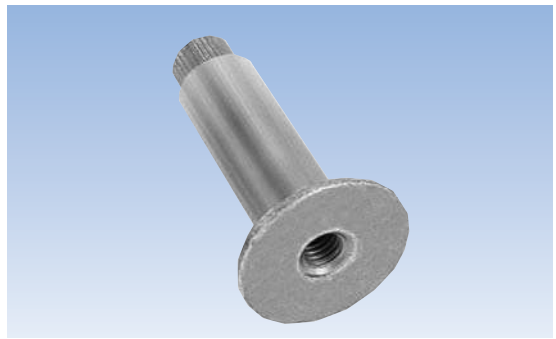

Special designs of RIVNUT® blind rivet nuts

- **RIVNUT® sealing nut with moulded-on captive plastic seal**
  Used on car boot hinges to provide a pressure-tight connection.

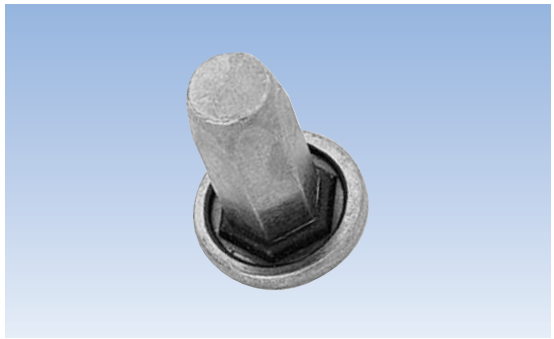

- **RIVNUT® extra-thick head, installed as nut and spacer, in combination with a large chamfered end for easier assembly**
  This RIVNUT® has a number of useful functions:
  – rivets two components
  – installs an internal thread
  – centres the screw
  – acts as a spacer.



- **RIVNUT® oval head for installation in an appropriately shaped recess**
  When installed in a plastic support with an oval recess, the head provides increased resistance to turning compared to the RIVNUT® blind rivet nut, without any head projection.



- **RIVNUT® rivet nut, hexagonal body providing increased resistance to turning. It can act as a spacer and is very efficient when used in multiple assembly process using a press.**

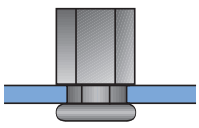



Further special designs

On request: imperial internal threads, alternative surface treatment, stainless steel with special surface treatments.

RIVNUT® *Hand-operated setting tools for limited production volumes*

Type S: Single-size hand-operated setting tool for RIVNUT® *blind rivet nuts*

- **Operation:**
  Single-sized riveting tool with threaded drive.
  The RIVNUT® blind rivet nuts are spun on by hand.
  Setting is achieved using a crank and socket.
  (included as supplied).
- **Application:**
  Low volume
- **Technical information:**
  Output: up to 2 items/min., stroke: 6 mm
  This tool is supplied with an anvil and mandrel.

Product code complete tool: 2353 01x x000
xx = 05 for M5, 06 for M6, 08 for M8, 10 for M10, 12 for M12



Material Blind rivet nut	M3	M4	M5	M6	M8	M10	M12	M14
Alu/steel/stainless			■	■	■	■	■	

We recommend the ZH 510, P 2005 or P 803 tools for setting RIVSTUD® blind rivet studs.

Z 305: Plier-type setting tool

- **Operation:**
  The rivet is spun on and off using a knurled thumb nut. Setting is done by the lever effect of the pliers. Practical and quick stroke adjustment.
- **Application:**
  Low volume
- **Technical information:**
  Output: up to 4 items/min.

Product code basic tool*: 2351 010 0000



Description	Blind rivet nut
	Product code
Mandrel	2351 01x x020
Anvil	2351 01x x030

xx = 03 for M3, 04 for M4, 05 for M5

Material Blind rivet nut	M3	M4	M5	M6	M8	M10	M12	M14
Alu/steel/stainless	■	■	■					

We recommend the ZH 510, P 2005 or P 803 tools for setting RIVSTUD® blind rivet studs.



Mandrel blind rivet nuts



Anvil blind rivet nuts

RIVNUT® *Hand-operated setting tools for limited and medium production volumes*

ZH 510: Lever-type setting tool

- **Operation:**
  The RIVNUT® is spun on and off the mandrel by an Archimedes screw feature.
  Crimping by lever action.
  Practical and quick stroke adjustment.
- **Application:**
  Low volume
- **Technical information:**
  Output: up to 5 items/min.

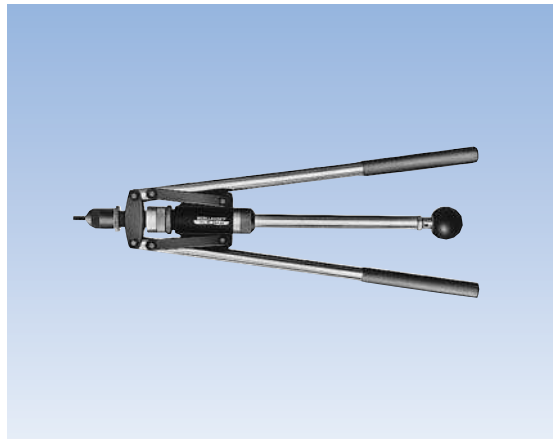

Product code basic tool*: 2351 030 0000
*Basic tool without mandrel and anvil.


Mandrel blind rivet nuts


Anvil blind rivet nuts


Mandrel blind rivet studs


Anvil blind rivet studs

Description	Blind rivet nut	Blind rivet stud
	Product code	Product code
Mandrel	2351 03x x020	3751 03x x020
Anvil	2351 03x x030	3751 03x x030

xx = 05 for M5, 06 for M6, 08 for M8, 10 for M10

Material Blind rivet nut	M3	M4	M5	M6	M8	M10	M12	M14
Aluminium			■	■	■	■		
Steel/stainl. steel			■	■	■			

Material Blind rivet stud	M3	M4	M5	M6	M8	M10	M12	M14
Steel			■	■	■			

E 308: Rechargeable setting tool

- **Operation:**
  Safely and simply spins RIVNUT® blind rivet nuts or studs on or off.
  Constant setting speed.
  Switches between setting and spinning automatically.
  Tool-less quick-change mandrel system.
- **Application:**
  Medium production volumes
- **Technical information:**
  Drive 12 V DC motor, weight approx. 2.3 kg, output per charge 180 to 600 RIVNUT®, stroke 5.5 mm max., setting force 14500 N max.



Product code basic tool: 2361 080 0000
Adapter for RIVNUT® blind rivet nuts M4, M5 and M6 included with basic tool.


Mandrel blind rivet nuts


Anvil blind rivet nuts


Mandrel blind rivet studs


Anvil blind rivet studs

Description	Blind rivet nut	Blind rivet stud
	Product code	Product code
Mandrel	2361 08x x020	3761 08x x020
Anvil	2361 08x x030	3761 08x x030

xx = 03 for M3, 04 for M4, 05 for M5, 06 for M6, 08 for M8, 10 for M10

Material Blind rivet nut	M3	M4	M5	M6	M8	M10	M12	M14
Aluminium	■	■	■	■	■	■		
Steel/stainl. steel	■	■	■	■	■			

Material Blind rivet stud	M3	M4	M5	M6	M8	M10	M12	M14
Steel		■	■	■	■			

RIVNUT® *Hydraulic / pneumatic setting tools for medium and high production volumes*

P 2005

- **Operation:** Automatic RIVNUT® loading by mandrel pressure, pneumatic/hydraulic setting, automatic spin-off. Stroke control. Mandrel changeover by bayonet lock.
- **Application:** High production volumes
- **Technical information:**
  Output: up to 15 items/min., weight: 2.6 kg, max. stroke: 7 mm, setting force: 21 000 N at 5.5 – 7 bar.
  This tool is delivered without mandrel or anvil.

Product code: 2361 550 6000




Mandrel blind rivet nuts


Anvil blind rivet nuts


Mandrel blind rivet studs


Anvil blind rivet studs

Description	Blind rivet nut	Blind rivet stud
	Product code	Product code
Mandrel	0320 00x x020	3761 13x x020
Anvil	0320 00x x030	3761 13x x030

xx = metric thread diameter
Example: M6 = 06 for RIVNUT® M6.
Except M12: Mandrel: 2361 531 2020,
Anvil: 2361 531 2030

Material Blind rivet nut	M3	M4	M5	M6	M8	M10	M12	M14
Alu		■	■	■	■	■	■	■	
Steel		■	■	■	■	■	■	■	
Stainl. steel		■	■	■	■	■	■		

Material Blind rivet stud	M3	M4	M5	M6	M8	M10	M12	M14
Steel			■	■	■			

P 803

- **Operation:** Installs different sizes of RIVNUT® blind rivet nuts and studs. Automatic loading by mandrel pressure, automatic spin-off. **Force control**.
- **Application:** Medium to high production volumes.
- **Technical information:**
  Output: up to 20 items/min., weight: 2.1 kg, max. stroke: 7 mm, max. setting force: 17 000 N.
  This tool is supplied equipped for setting RIVNUT® blind rivet nuts size M6.

Product code: 2368 030 1000


Blind rivet nut conversion kit


Mandrel blind rivet nuts (Screws DIN 912)


Anvil blind rivet nuts

Washer blind rivet nuts

Bush blind rivet nuts

Description	Blind rivet nut
Conversion kit	2368 03x x000
Screws (10 No.)	2368 03x x020
Anvil	2361 13x x030
Washer	2368 03x x040
Bush	2368 03x x010

xx = thread diameter
Example: M6 = 06 for RIVNUT® M6.
All the mandrels and anvils used with the P 2005 (see above), in particular those for RIVSTUD®, can also be used with a special anvil adapter 2368 030 0400 with the P 803.

Conversion kit to permit use of DIN912 screw as mandrel, available upon request.



Material Blind rivet nut	M3	M4	M5	M6	M8	M10	M12	M14
Alu/steel/stainless	■	■	■	■	■			

Material Blind rivet stud	M3	M4	M5	M6	M8	M10	M12	M14
Steel			■	■	■			

EPK C: Hydraulic-pneumatic tool with process control

- **Function:**
  Tool featuring pressure regulation and force monitor for 100% quality controlled riveting process, with fault warning signal. Automatic loading by mandrel pressure, automatic spin-off. Component-specific counting function. Also available with setting head in pistol or rod version. Multilingual touchscreen menu. Totally Operator-independent installation process.
- **Application:** High production volumes, high quality standards, safety components, fulfils statutory record keeping requirements.
- **Technical information:**
  Dimensions: M 3 to M 8, output: up to 20 items/min., pistol weight: 2.3 kg, stroke: max. 6.5 mm, setting force: max. 21 000 N.



Accessories for P 2005, P 803 and EPK C

Description		Product code
Maintenance unit	G ¼" = 700 Ltr. at 6 bar	0196 000 1001
Spring Balancer	Load capacity 2 – 5 kg	0196 000 1103
Supply hose	GC N NW 06/lfdm	0196 000 1133
Hose clamp	8 – 12 mm	0196 000 1150

SAC 310: Modular, semi-automatic setting head (spindle stroke principle, hydraulic pneumatic)

- **Function:**
  This light, compact setting head is designed for the semi-automatic setting of RIVNUT® blind rivet nuts and studs even on components that can only be accessed from one side. Automatic RIVNUT® loading by mandrel pressure, pneumatic/hydraulic setting, automatic spin-off. The system is designed in modules which means that either single-head or multi-head units can be built. Direct pneumatic and electronic control and process control are available. As an option, the unit can be fitted with a data output to enable compiling of quality documentation. A wide range of standard modules is available. Standard modules can be used to build stand-alone workstations or to incorporate a unit into a production line.
- **Application:** Medium to large series production volumes. Simultaneous setting of multiple RIVNUT® blind rivet nuts and studs.
- **Technical data:** Sizes: M 3 to M 10. Cycle time: approx. 2 seconds (setting and spin-off). Weight: 2 kg (M 6). Setting stroke: 7 mm (max)

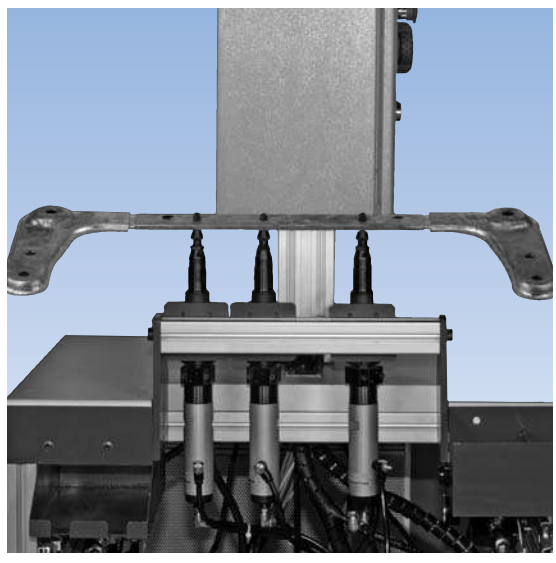

HSA 803: Automatic setting head (Spindle stroke priciple, hydraulic-pneumatic)

- **Function:**
  This setting head automates the blind rivet nut and stud setting process, even with components that can only be accessed from one side. The RIVNUT® feed system features vibrating spiral conveyors or other feeder systems. With integrated process control. RIVNUT® blind rivet nuts and studs with hexagonal bodies can be easily fed and set in the right position the first time round. Loading and setting in any position, even overhead.
- **Application:** High production volumes, high quality standards, safety components.
- **Technical information:**
  Dimensions: M 4 to M 10, loading time: approx. 2 seconds, riveting process: approx. 3 seconds, weight: approx. 15 kg.



CFA 803: Automatic setting head (press principle)

- **Function:**
  For the automatic setting of blind rivet nuts and studs. The C-frame module can, for example, be integrated into an articulated robot as part of a complex manufacturing centre for components that can be accessed from both sides. Setting times of approx. 3.5 seconds are possible, thus providing extremely high productivity. RIVNUT® supply by way of RS ring sorter. The threaded mandrel is no longer required, thus eliminating downtime for the rotational replacement of this wearing part and preventing malfunctions. RIVNUT® blind rivet nuts and studs with hexagonal bodies can be easily fed and set in the right position the first time round. Loading and setting in any position, even overhead.
- **Application:** High production volumes, high quality standards, safety components. Accesability from both sides.
- **Technical information:**
  Dimensions: M 5 to M 8 (other dimensions on request), total cycle time: approx. 3.5 seconds/ item, weight of C-frame module: approx. 25 kg (depends on size of C-frame), max. riveting force: 18 kN, max. operating pressure: 400 bar, PLC control.

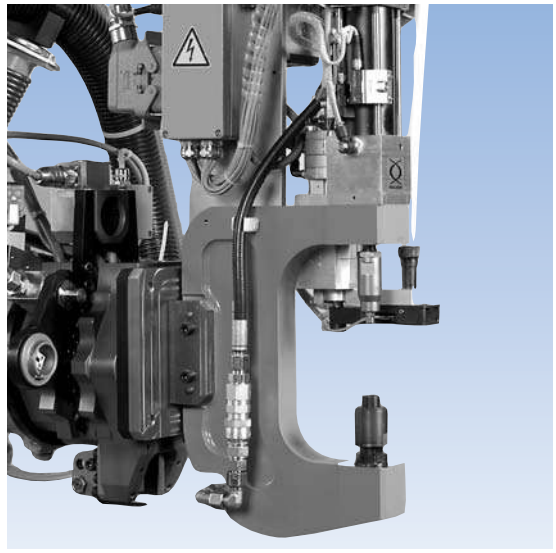

Our applications engineering staff will be pleased to help you select the right tool.

Progress in riveting . . .
. . . through force-controlled setting!

EPK C

100 % process reliability

thanks to:

- 100 % control of all relevant parameters
- Automatic filtering of faulty components
- Automatic control of component clamping
- Computer aided documen-tation
- Plaintext error messages



Advantages:

■ Operator independent process ■ No post production process costs ■ No deformation of customer's component ■ No damage to RIVNUT® thread ■ Computer aided documentation ■ Ergonomic setting head available as a pistol or rod ■ Long service life of mandrels ■ Compatible with previous model ■ Touchscreen operation ■ Multilingual menu ■ Selected functions are password protected ■ Optimised ergonomics (weights, dimensions etc.) ■ Reduced noise emissions ■ Easy setup thanks to menu guide ■ Automatic control of component clamping.

Böllhoff International



North Europe
Wilhelm Böllhoff GmbH & Co. KG, Bielefeld
Böllhoff GmbH, Bielefeld with branches
in Bielefeld, Braunschweig, Dormagen,
Leipzig, Munich, Nuremberg and Stuttgart,
Böllhoff Verbindungstechnik GmbH, Bielefeld
Böllhoff Systemtechnik GmbH & Co. KG, Bielefeld,
Böllhoff Schraubtechnik GmbH, Bielefeld
Böllhoff Produktion GmbH & Co. KG, Bielefeld
and Sonnewalde, Germany
Bollhoff Fastenings Ltd., Birmingham, Great Britain

South-West Europe
Bollhoff Otalu s. a., La Ravoire, France
Bollhoff s.r.l., Milan, Italy
Bollhoff s.a., Madrid, Spain

South-East Europe
Böllhoff GmbH, Linz, Austria
Böllhoff Kft, Székesfehérvár, Hungary
Böllhoff s. r. o., Prag, Czech-Republic
Böllhoff s.r.l., Bors, Romania
Bimex-Böllhoff, Krzemienica,
Bollhoff Technika, Łączenia Sp. z o.o., Poland
Böllhoff OOO, Velikij Novgorod, Russia
Böllhoff Civata Ticaret Limited Sirketi, Istanbul, Turkey

North America
Bollhoff RIVNUT® Inc., Kendallville, Indiana, USA
Bollhoff Inc., Ontario, Canada
Bollhoff S.A. de C.V., Mexico City, Mexico

South America
Bollhoff Adm. e Part. Ltda., Jundiaí,
Bollhoff Service Center Ltda., Jundiaí ,
Porto Allegre and Curitiba, Brazil
Bollhoff S.A., Buenos Aires, Argentinia

Africa
Bollhoff (Pty) Ltd., Centurion, South Africa

Asia
Bollhoff Fastening Ltd., Wuxi, China

In addition to Böllhoff companies in these 19 countries, the company has a network of agents and dealers serving an international customer base in major industrial markets world-wide.

Subject to technical change · Reprinting, even in extract form, only permitted with express consent · Observe protective note according to DIN 34.

BÖLLHOFF

Bollhoff Fastenings Ltd · Midacre, Willenhall, West Midlands, WV13 2JW, United Kingdom
Phone: +44 (0)1902 637161 · Fax: +44 (0)1902 609495 · Internet: www.bollhoff.com/uk

BÖLLHOFF