S4E350-AA06-17

AC axial panel fan

straight blades (A series)

with guard grille for short nozzle

ebm-papst Mulfingen GmbH & Co. KG
Bachmühle 2 · D-74673 Mulfingen
Phone +49 7938 81-0
Fax +49 7938 81-110
info1@de.ebmpapst.com
www.ebmpapst.com

Limited partnership · Headquarters Mulfingen
Amtsgericht (court of registration) Stuttgart · HRA 590344

General partner Elektrobau Mulfingen GmbH · Headquarters Mulfingen
Amtsgericht (court of registration) Stuttgart · HRB 590142

Nominal data

Type	**S4E350-AA06-17**		
Motor	**M4E068-EC**		
Phase		1~	1~
Nominal voltage	VAC	230	230
Frequency	Hz	50	60
Method of obtaining data		fa	fa
Valid for approval/standard		CE	CE
Speed (rpm)	min^{-1}	1390	1550
Power consumption	W	140	195
Current draw	A	0.62	0.86
Capacitor	µF	5	5
Capacitor voltage	VDB	400	400
Capacitor standard		S0 (CE)	S0 (CE)
Max. back pressure	Pa	120	90
Max. back pressure	in. wg	0.48	0.36
Min. ambient temperature	°C	-40	-40
Max. ambient temperature	°C	50	30
Starting current	A	1.4	1.3

ml = Max. load · me = Max. efficiency · fa = Free air · cs = Customer specification · ce = Customer equipment
Subject to change

Data according to Commission Regulation (EU) 327/2011 (prEN 17166)

		Actual	Req. 2015
01 Overall efficiency η_{es}	%	29	28.5
02 Measurement category		A	
03 Efficiency category		Static	
04 Efficiency grade N		40.5	40
05 Variable speed drive		No	

09 Power consumption P_e	kW	0.15
09 Air flow q_v	m^3/h	1865
09 Pressure increase p_{fs}	Pa	89
10 Speed (rpm) n	min^{-1}	1350
11 Specific ratio*		1.00

Data obtained at optimum efficiency level.

* Specific ratio = 1 + p_{fs} / 100 000 Pa

LU-199647

The efficiency values displayed for achieving conformity with the Ecodesign Regulation EU 327/2011 has been reached with defined air duct components (e.g. inlet rings).
The dimensions must be requested from ebm-papst. If other air conduction geometries are used on the installation side, the ebm-papst evaluation loses its validity/the conformity must be confirmed again.

The product does not fall within the scope of Regulation (EU) 2019/1781 due to the exception specified in Article 2 (2a) (motors completely integrated into a product).

AC axial panel fan

straight blades (A series)

with guard grille for short nozzle

Technical description

Weight	4.5 kg
Size	350 mm
Motor size	68
Rotor surface	Painted black
Terminal box material	PP plastic
Impeller material	Sheet steel, painted black
Guard grille material	Steel, coated with black plastic (RAL 9005)
Number of blades	5
Airflow direction	V
Direction of rotation	Counterclockwise, viewed toward rotor
Degree of protection	IP44; installation- and position-dependent as per EN 60034-5
Insulation class	"B"
Moisture (F) / Environmental (H) protection class	H1+
Max. permitted ambient temp. for motor (transport/storage)	+ 70 °C
Min. permitted ambient temp. for motor (transport/storage)	- 40 °C
Installation position	Shaft horizontal or rotor on bottom; rotor on top on request
Condensation drainage holes	On rotor side
Mode	S1
Motor bearing	Ball bearing with low-temperature lubricant
Touch current according to IEC 60990 (measuring circuit Fig. 4, TN system)	< 0.75 mA
Electrical hookup	Terminal box; Capacitor integrated and connected
Motor protection	Thermal switch auto reset, lead out, with basic insulation
With cable	Axial
Protection class assignment	I; If a protective earth is connected. The built-in component has several local protection class assignments. The final protection class is determined by the intended installation.
Motor capacitor according to EN 60252-1 in safety protection class	S0
Conformity with standards	EN 60034-1; EN 60204-1; EN 60335-1; CE
Approval	EAC

ebm-papst Mulfingen GmbH & Co. KG · Bachmühle 2 · D-74673 Mulfingen · Phone +49 (0) 7938 81-0 · Fax +49 (0) 7938 81-110 · info1@de.ebmpapst.com · www.ebmpapst.com

AC axial panel fan

straight blades (A series)

with guard grille for short nozzle

Product drawing

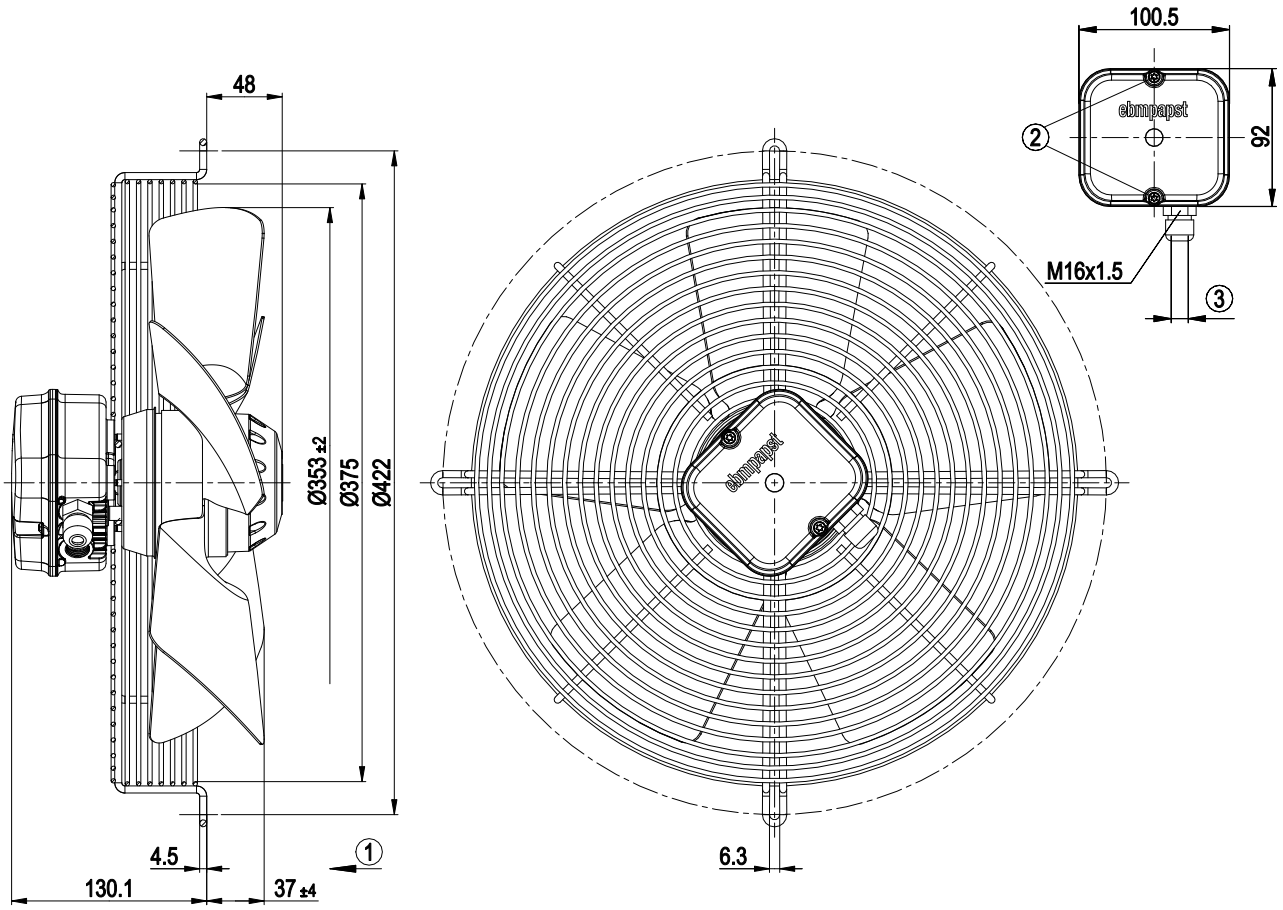

1	Direction of air flow "V"
2	Tightening torque 1.5 ± 0.2 Nm
3	Cable diameter: max. 7.5 mm, tightening torque 1.3 ± 0.2 Nm

ebm-papst Mulfingen GmbH & Co. KG · Bachmühle 2 · D-74673 Mulfingen · Phone +49 (0) 7938 81-0 · Fax +49 (0) 7938 81-110 · info1@de.ebmpapst.com · www.ebmpapst.com

AC axial panel fan

straight blades (A series)

with guard grille for short nozzle

Connection diagram

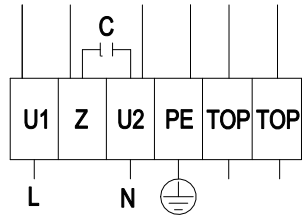

L	= U1 = blue	Z	brown	N	= U2 = black
PE	green/yellow	TOP	gray		

ebm-papst Mulfingen GmbH & Co. KG · Bachmühle 2 · D-74673 Mulfingen · Phone +49 (0) 7938 81-0 · Fax +49 (0) 7938 81-110 · info1@de.ebmpapst.com · www.ebmpapst.com

AC axial panel fan

straight blades (A series)

with guard grille for short nozzle

Curves: Air performance 50 Hz

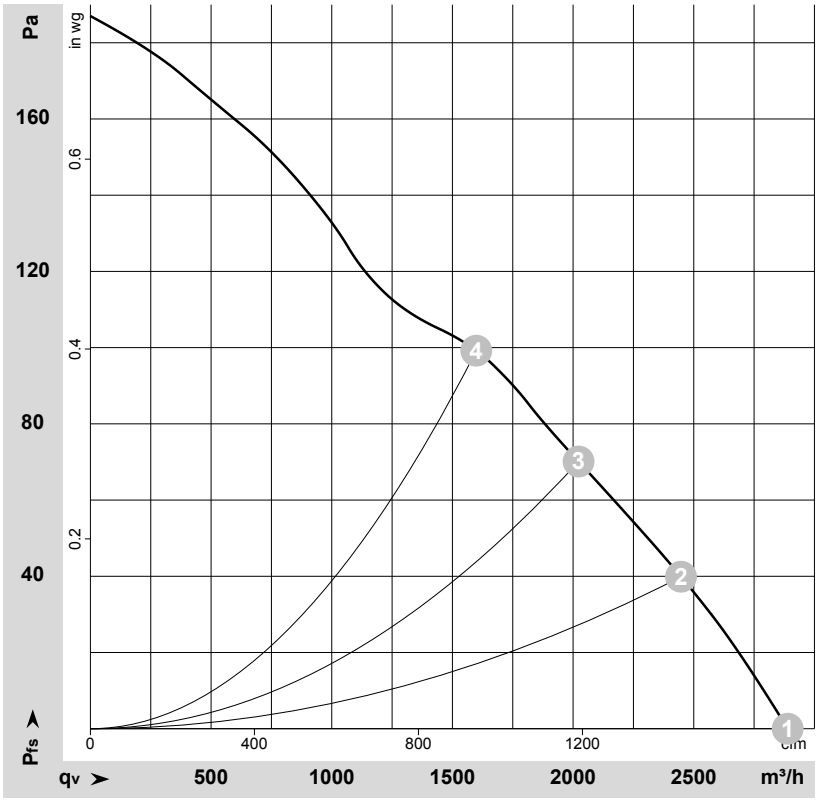

ρ = 1.15 kg/m³ ± 2 %

Measurement: LU-64421-1
Date: 2004-07-09
Housing: 09441-2-4037

Air performance measured according to ISO 5801 installation category A. For detailed information on the measurement setup, contact ebm-papst. Intake sound level: Sound power level according to ISO 13347 / sound pressure level measured at 1 m distance from fan axis. The values given are valid under the specified measuring conditions and may vary due to conditions of installation. For deviations from the standard configuration, the parameters have to be checked on the installed unit.

Measured values

	U	f	n	P_e	I	q_V	p_{fs}	q_V	p_{fs}
	V	Hz	min^{-1}	W	A	m^3/h	Pa	cfm	in. wg
1	230	50	1390	140	0.62	2890	0	1700	0.00
2	230	50	1370	144	0.63	2445	40	1440	0.16
3	230	50	1360	150	0.65	2025	70	1190	0.28
4	230	50	1315	174	0.75	1600	100	940	0.40

U = Voltage · f = Frequency · n = Speed (rpm) · P_e = Power consumption · I = Current draw · q_V = Air flow · p_{fs} = Pressure increase

ebm-papst Mulfingen GmbH & Co. KG · Bachmühle 2 · D-74673 Mulfingen · Phone +49 (0) 7938 81-0 · Fax +49 (0) 7938 81-110 · info1@de.ebmpapst.com · www.ebmpapst.com

AC axial panel fan

straight blades (A series)

with guard grille for short nozzle

Curves: Air performance 60 Hz

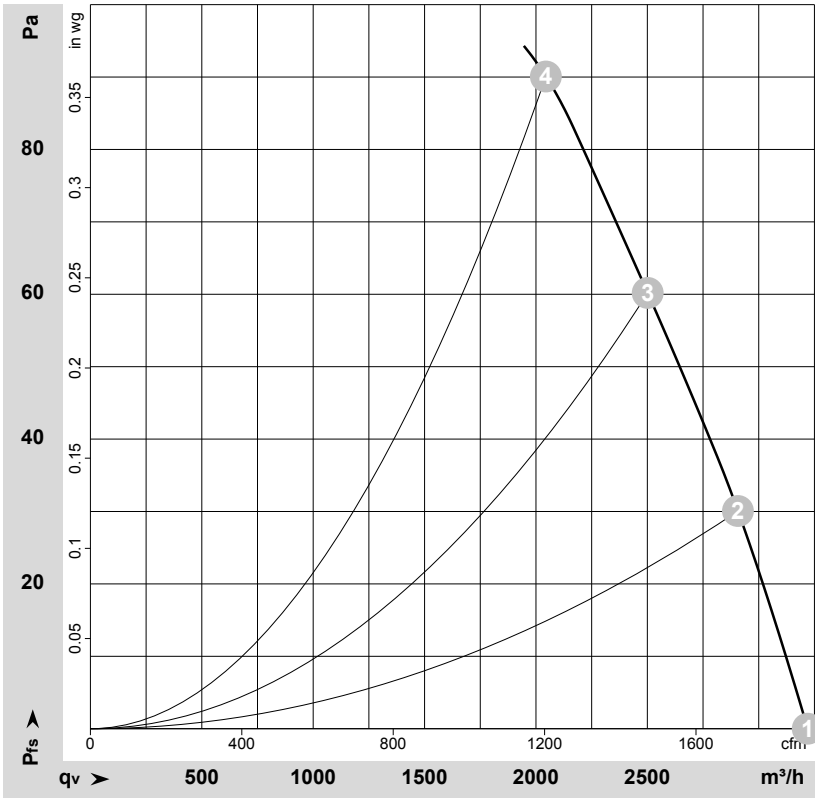

ρ = 1.15 kg/m³ ± 2 %

Measurement: LU-64461-1
Date: 2004-07-09
Housing: 09441-2-4037

Air performance measured according to ISO 5801 installation category A. For detailed information on the measurement setup, contact ebm-papst. Intake sound level: Sound power level according to ISO 13347 / sound pressure level measured at 1 m distance from fan axis. The values given are valid under the specified measuring conditions and may vary due to conditions of installation. For deviations from the standard configuration, the parameters have to be checked on the installed unit.

Measured values

	U	f	n	P_e	I	q_V	p_{fs}	q_V	p_{fs}
	V	Hz	min^{-1}	W	A	m^3/h	Pa	cfm	in. wg
1	230	60	1550	195	0.86	3220	0	1895	0.00
2	230	60	1520	202	0.88	2905	30	1710	0.12
3	230	60	1490	211	0.92	2500	60	1475	0.24
4	230	60	1465	217	0.94	2045	90	1205	0.36

U = Voltage · f = Frequency · n = Speed (rpm) · P_e = Power consumption · I = Current draw · q_V = Air flow · p_{fs} = Pressure increase

ebm-papst Mulfingen GmbH & Co. KG · Bachmühle 2 · D-74673 Mulfingen · Phone +49 (0) 7938 81-0 · Fax +49 (0) 7938 81-110 · info1@de.ebmpapst.com · www.ebmpapst.com