ES 32

For RM96 1 CO

Screw terminals
Max. tightening moment
for the terminal: 0,7 Nm
35 mm rail mount
acc. to PN-EN 60715
or on panel mounting
75 x 15,5 x 42,5(59) mm ❷
One pole, 3,2 mm pinout
12 A, 300 V AC

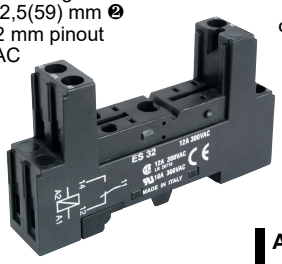

Connection diagrams

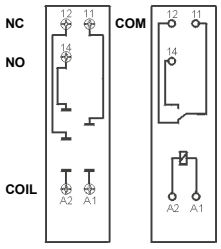

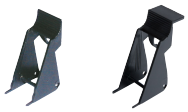



Accessories ❶



Dimensions

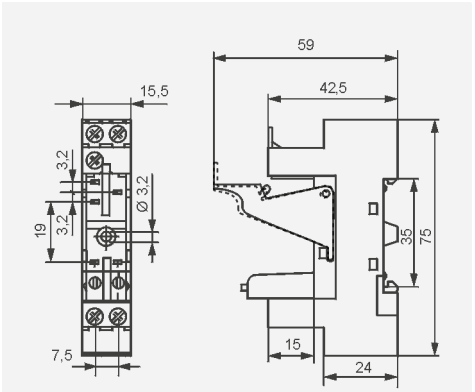

EC 32

For PCB
31 x 12,7 x 9 mm
One pole, 3,2 mm pinout
12 A, 300 V AC

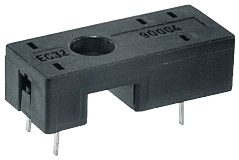

Pinout

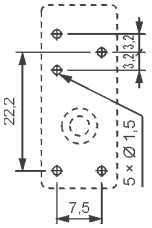

Accessories



Dimensions

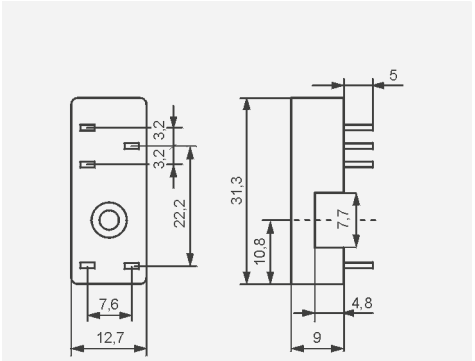

GZT2

For R2N

Screw terminals
Max. tightening moment
for the terminal: 0,7 Nm
35 mm rail mount
acc. to PN-EN 60715
or on panel mounting
76,3 x 27 x 42,5(80) mm ❷
Two poles
12 A, 300 V AC

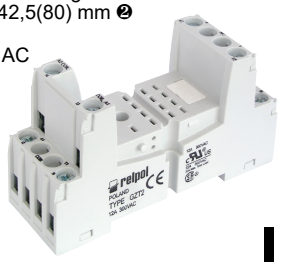

Connection diagram

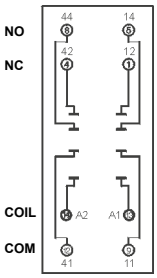







Accessories ❶

Dimensions

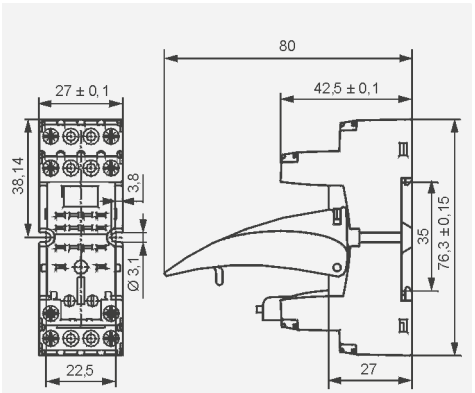

GZM2

For R2N

Screw terminals
Max. tightening moment
for the terminal: 0,7 Nm
35 mm rail mount
acc. to PN-EN 60715
or on panel mounting
75 x 27 x 61(82) mm ❷
Two poles
12 A, 300 V AC

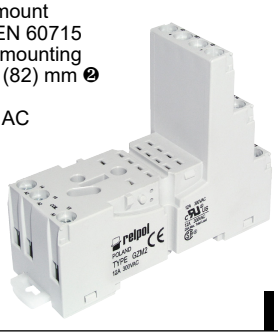

Connection diagram

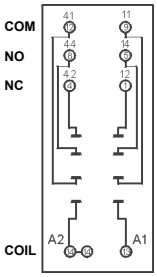







Accessories ❶

Dimensions

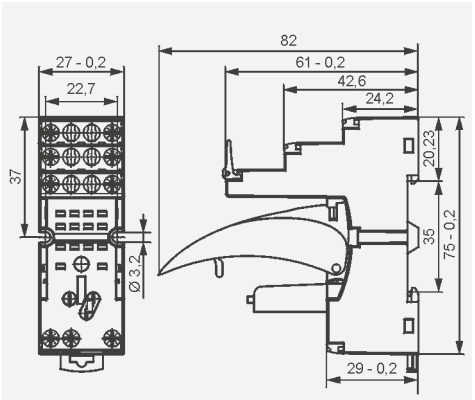

❶ Mounting and sub-assemblies of accessories in the socket - see page 16. Signalling / protecting modules type M... - see page 17.
❷ In the bracket the height of socket with retainer / retractor clip is shown.