Reservoir, Series AS2-CLA

2024-03-19

R412006347

Series AS2

Qn = 14500 l/min

Technical data

Industry	Industrial
Parts	Reservoir
Reservoir	reservoir, polycarbonate, with PA protective guard
Filter reservoir volume	28 cm³
Protective guard	with protective guard
Min. working pressure	0 bar
Max. working pressure	16 bar
Min. ambient temperature	-10 °C
Max. ambient temperature	50 °C
Min. medium temperature	-10 °C
Max. medium temperature	50 °C
Medium	Compressed air
Weight	0.77 kg

Material

Material reservoir	Polycarbonate
Material protective guard	Polyamide
Seal material	Acrylonitrile butadiene rubber
Part No.	R412006347

Technical information

The pressure dew point must be at least 15 °C less than ambient and medium temperature and may not exceed 3 °C.

The oil content of compressed air must remain constant during the life cycle.

Use only the approved oils from AVENTICS. Further information can be found in the “Technical information” document (available in https://www.emerson.com/en-us/support).

Reservoir, Series AS2-CLA

2024-03-19

R412006347

Dimensions in mm

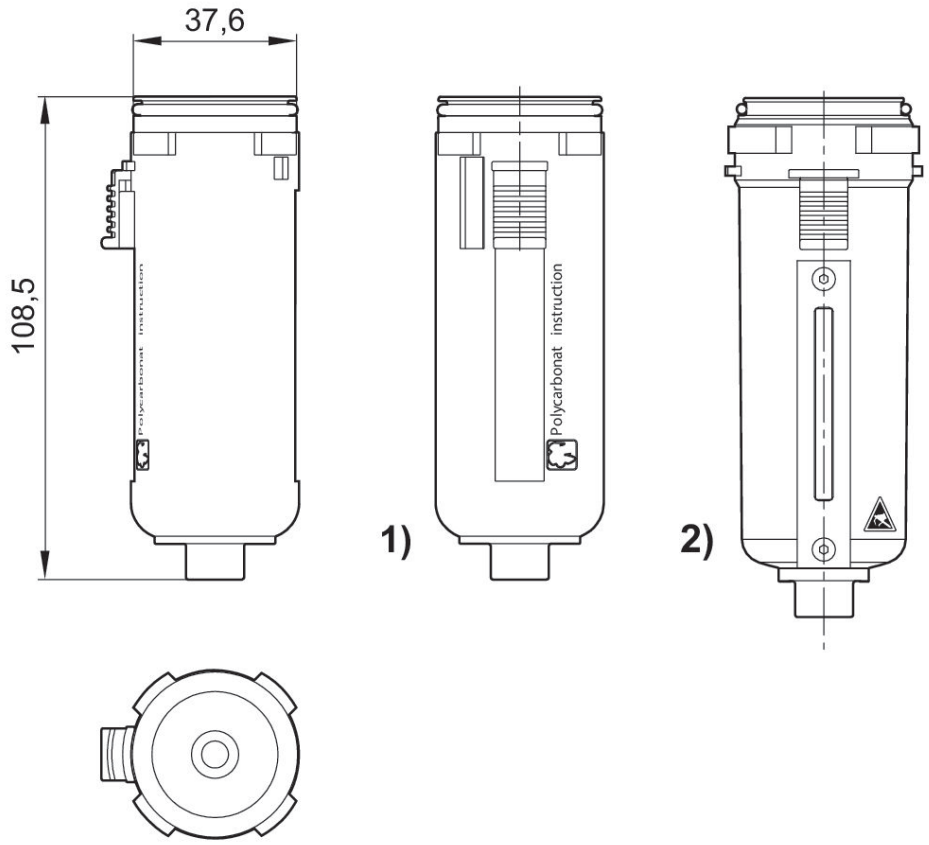

1) Plastic reservoir and protective guard with window
2) Metal reservoir with inspection glass