E43344

Process adapter for SMS pipe fitting

ADAPT G1/2 - SMS DN50/2"

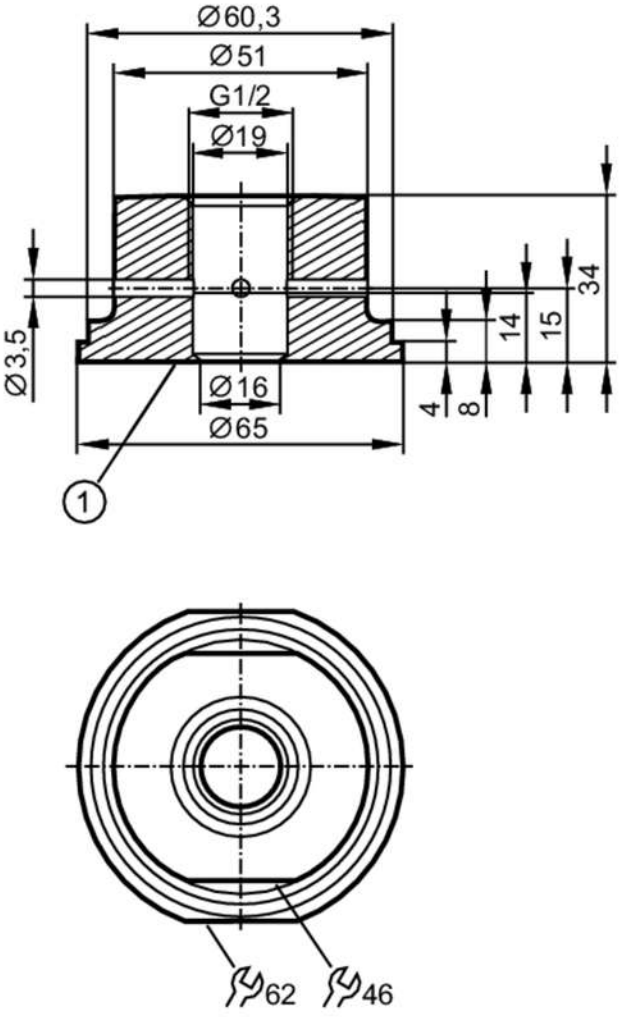

1 sealing edge

EC 1935/2004 FCM

Application		
Design		with leakage port
Pressure rating	[bar]	16
Tests / approvals		
Pressure Equipment Directive		A possible classification to PED depends on the application and has to be carried out by the user / operator.
Pressure Equipment Directive EAC		The adapter is intended for use in devices, machines and installations that do not fall under the categories of the technical rule TR CU 032/2013.
Safety instructions		The compatibility between medium and product material has to be checked in all applications.
Mechanical data		
Weight	[g]	570.5
Materials		stainless steel (1.4435 / 316L)
Sensor connection		G 1/2 sealing cone
Process connection		SMS pipe fitting DN50 (2")

E43344

Process adapter for SMS pipe fitting

ADAPT G1/2 - SMS DN50/2"

Surface characteristics Ra/Rz of the wetted parts	< 0.8 / 8
Sealing	metal to PEEK
Hygienic equipment class to DIN 11866	H3
Remarks	
Pack quantity	1 pcs.