IM5137

Inductive sensor

IMC2015-BRKG/UP/0,8M/ZH/US

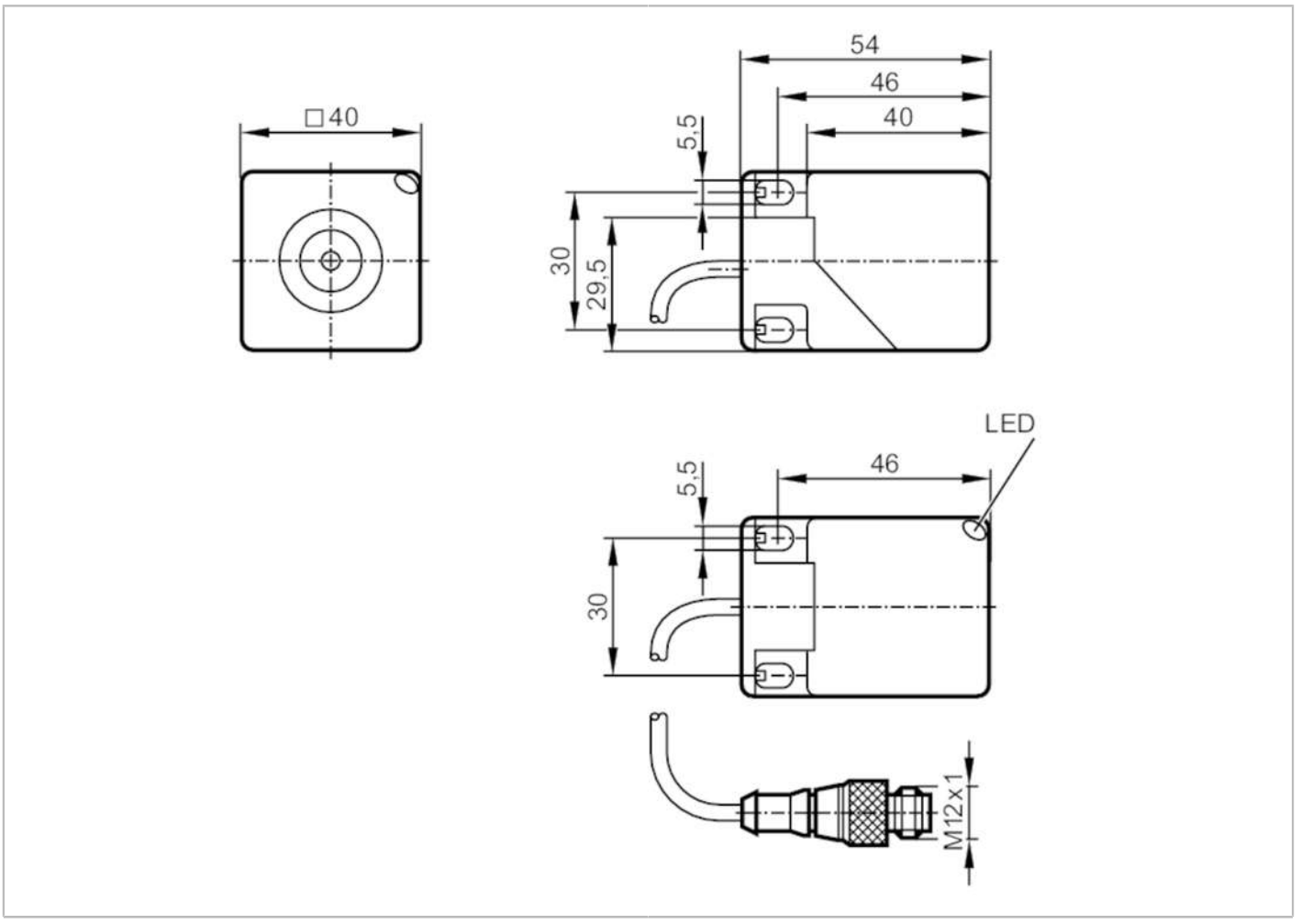

Product characteristics		
Electrical design		PNP/NPN
Output function		normally closed
Sensing range	[mm]	15
Housing		rectangular
Dimensions	[mm]	40 x 40 x 54
Electrical data		
Operating voltage	[V]	10...36 DC
Protection class		II
Reverse polarity protection		yes
Outputs		
Electrical design		PNP/NPN
Output function		normally closed
Max. voltage drop switching output DC	[V]	4.6
Minimum load current	[mA]	2
Max. leakage current	[mA]	0.8

IM5137

Inductive sensor

IMC2015-BRKG/UP/0,8M/ZH/US

Permanent current rating of switching output DC	[mA]	100	
Switching frequency DC	[Hz]	200	
Short-circuit protection		yes	
Type of short-circuit protection		pulsed	
Overload protection		yes	
Detection zone			
Sensing range	[mm]	15	
Real sensing range Sr	[mm]	15 ± 10 %	
Operating distance	[mm]	0...12.1	
Accuracy / deviations			
Correction factor		steel: 1 / stainless steel: 0.7 / brass: 0.4 / aluminium: 0.4 / copper: 0.3	
Hysteresis	[% of Sr]	1...15	
Switch point drift	[% of Sr]	-10...10	
Operating conditions			
Ambient temperature	[°C]	-25...70	
Protection		IP 67	
Tests / approvals			
EMC		EN 61000-4-2 ESD	8 kV CD / 6 kV AD
		EN 61000-4-3 HF radiated	10 V/m
		EN 61000-4-4 Burst	2 kV
		EN 61000-4-5 Surge	0,5 kV line to line, Ri: 2 Ohm
		EN 61000-4-6 HF conducted	10 V
		EN 55011	class B
MTTF	[years]	1714	
Mechanical data			
Weight	[g]	161.5	
Housing		rectangular	
Sensing face		5 positions selectable	
Mounting		flush mountable	
Dimensions	[mm]	40 x 40 x 54	
Materials		PA	
Displays / operating elements			
Display		switching status	1 x LED, yellow
Remarks			
Pack quantity		1 pcs.	

IM5137

Inductive sensor

IMC2015-BRKG/UP/0,8M/ZH/US

Electrical connection - plug

Cable: 0.8 m, PUR

Connector: 1 x M12; coding: A; Locking: knurled nut, rotatable



