B-B (1 : 1)

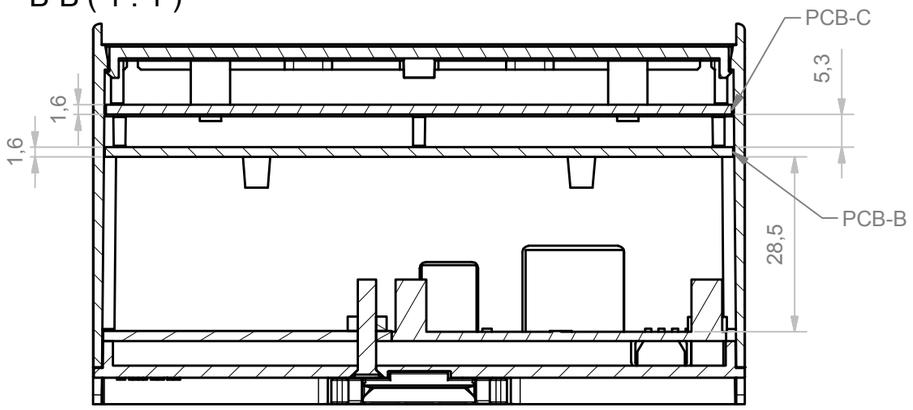

SECONDARY PCB

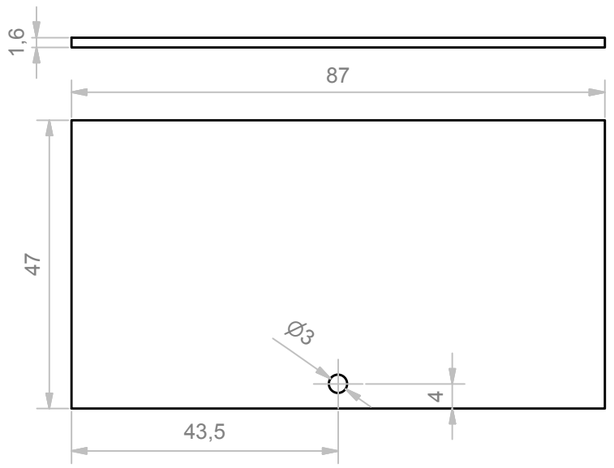

PCB BEAGLEBONE BLACK

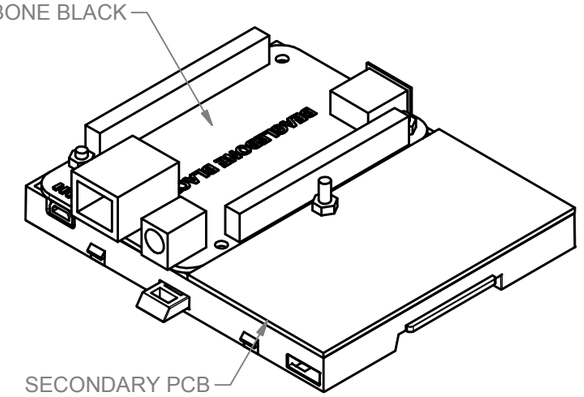

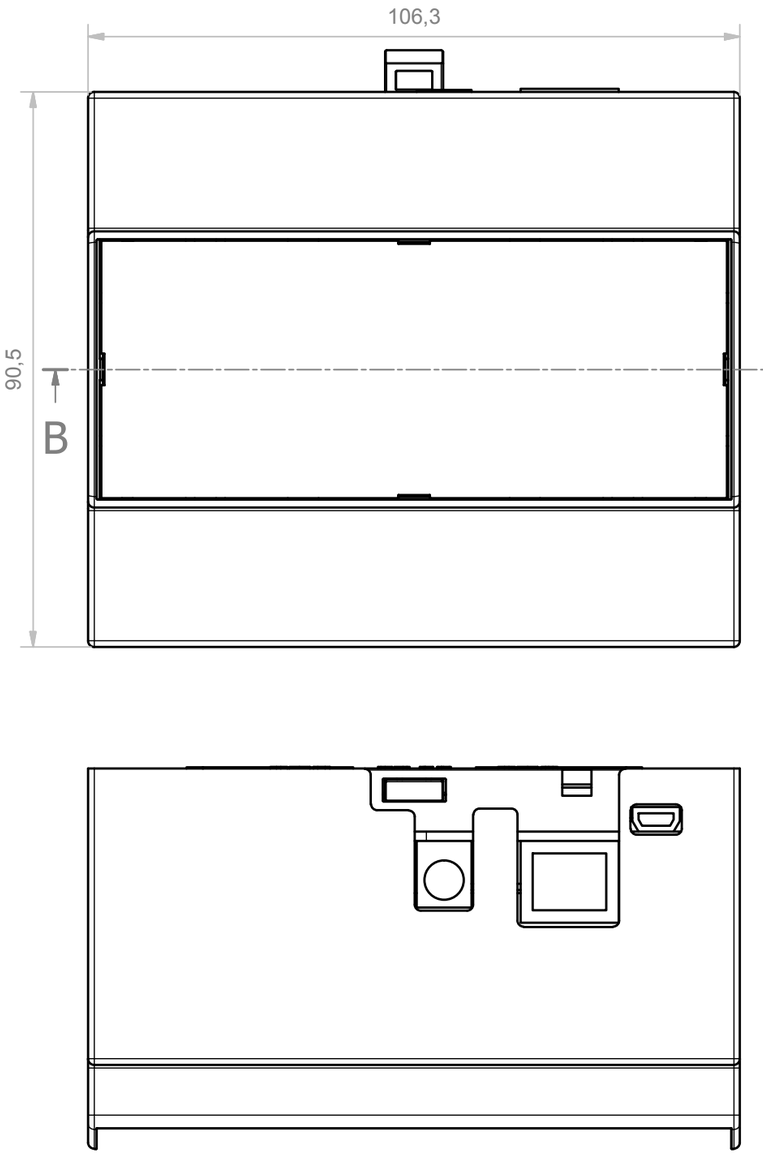

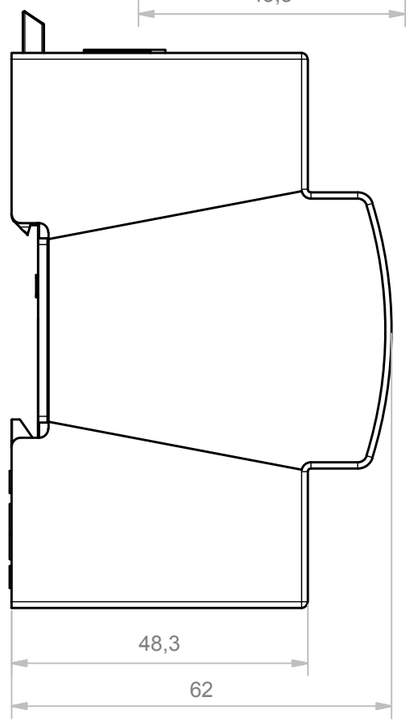

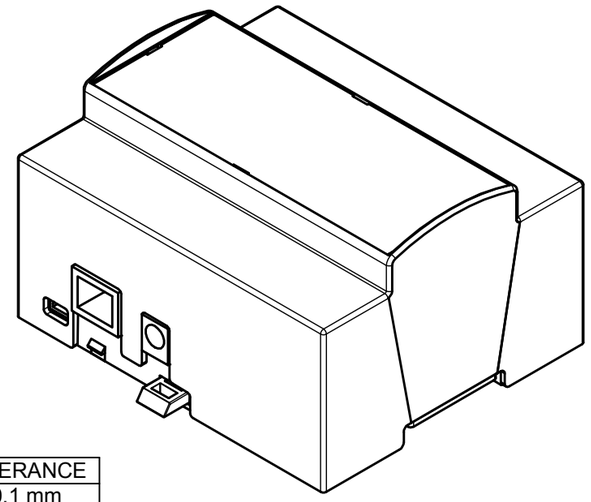

PCB TYPE	PCB DIMENS	TOLERANCE
B	102,5 x 58,7	±0,1 mm
C	102,1 x 42,0	±0,1 mm

Da 0,5 a 3	Oltre 3 fino a 6	Oltre 6 fino a 30	Oltre 30 fino a 120	Oltre 120
± 0,1	± 0,1	± 0,2	± 0,3	± 0,5

RESERVED PROPERTY
The present drawing cannot be reproduced or comunicated to 3d parties, even partially, without the authorization of ITALTRONIC Srl. Italtronic reserves to protect its own rights according to the law.

Dimension in mm

SHEET NR. 1 / 1

DRAWING BY
Manual modification are not allowed

GENERAL TOLERANCE
UNI EN 22768/1 Media (m)

Date: 30/09/2014

Replace nr.

Drawed: Rigato N.

Checked: Dalla Montà D.

Scale:

5 4 3 2 1
Revision description

italtronic
enclosures for electronics

Denomination:
Kit 6M XTS Beaglebone

Hitaltech
A group of connecting technologies

Drawing nr.
M-05632-00