## F Electronic Bell

Fire Alarm Device – Sounders

INSTALLATION INSTRUCTIONS

**Note: specifications marked with an * have NOT been verified to be compliant with EN54-3**

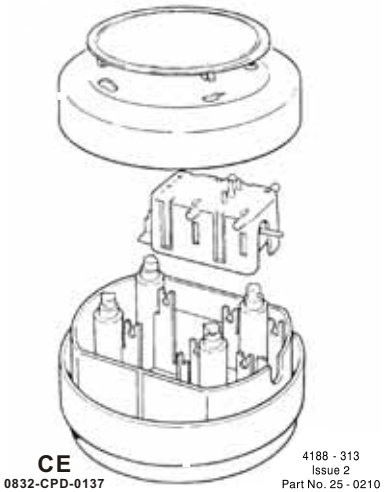

CE

0832-CPD-0137

4188 - 313
Issue 2
Part No. 25 - 0210



| Type | Nominal Voltage | Voltage Range | Current | Sound Pattern | *SPL @nominal voltage(@90° to front face) | EN54-3 SPL @ 28V DC dB(A) (see notes) |
|---|---|---|---|---|---|---|
| F/012 | $12V_{DC}$* | 9-15$V_{DC}$* | 55-65mA | Bell Ring sound | 95dB(A) | N/A * |
| F/024 | $24V_{DC}$ | 18-30$V_{DC}$ | 25-35mA | Bell Ring sound | 95dB(A) | 95dB(A) |
| F/230 | $230V_{AC}$* | 200-250V* | 20-30mA | Bell Ring sound | 95dB(A) | N/A * |

**EN54-3**
**Fulleon Ltd, Cwmbran, South Wales, UK.**

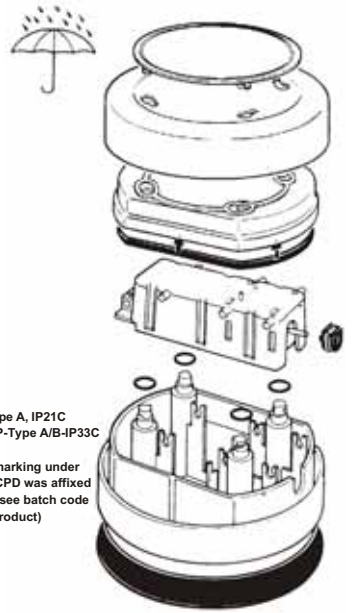

**F-Type A, IP21C**
**F/WP-Type A/B-IP33C**

**CE marking under the CPD was affixed on: (see batch code on product)**

**i) Bells certified under the CPD for Fire Alarm Applications, are shown in the column marked EN54-3.**
**ii) EN54-3 measurements shown reflect minimum expected SPL reading at the Loudest Point around the EN54-3 defined sounder axis.**
**iii) All other tone measurements reflect manufactures data, and are not verified by a Notified Body.**
**iv) Detailed EN54-3 polar SPL measurements are available in the Product Manual M05-006.**
**v) All other measurements are taken at 20°C operating temperature.**

## A.C. ELECTRONIC BELL

INSTALLATION INSTRUCTIONS

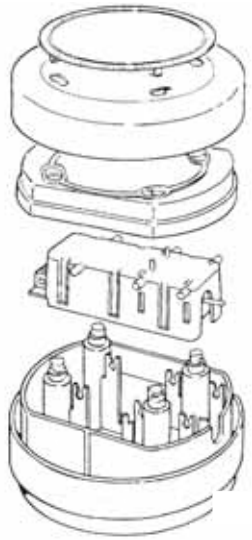

4188 - 313
Issue 2

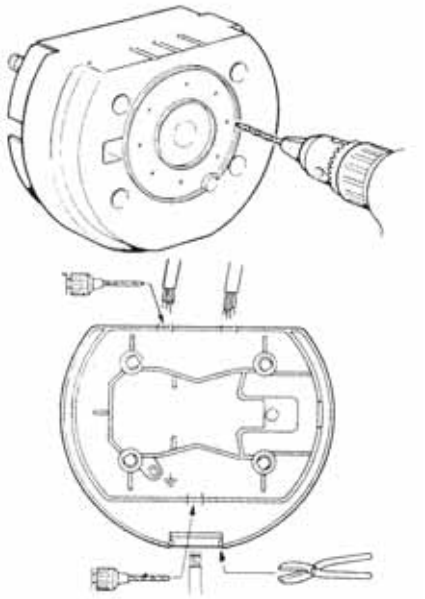

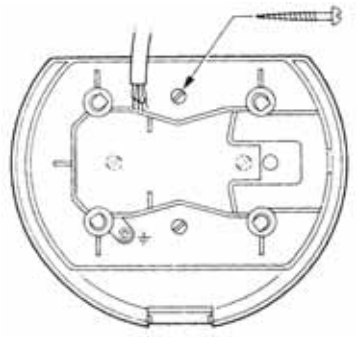

**Important note:**

The mains version should only be installed by a suitably qualified person.

The mains supply should be isolated before removing the cover. Ensure that the gong fixing screw is refitted after installation. The supply must be wired using cable of no greater than 6A rating and a cross sectional area of 0.75mm². The cable must be secured using a suitable cable gland.

A readily accessible disconnect device must be incorporated in the mains supply wiring to this unit. Refer to current wiring regulations.

The unit should be powered via a 1A 250V anti-surge fuse (T1A250V).

