# E11714

## Wirable socket

SDOAH050MSSFKPG

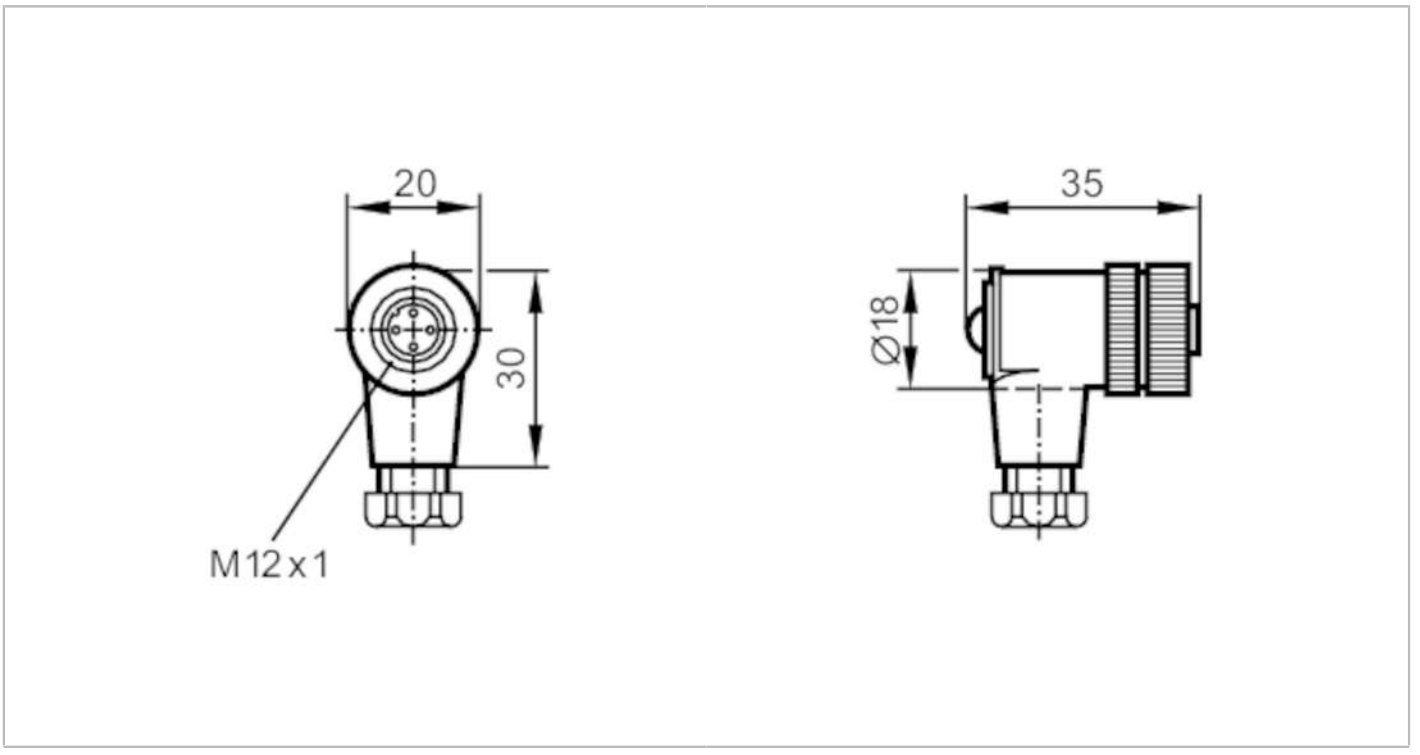


| | | |
|---|---|---|
| **Application** | | |
| Special feature | | Free from silicone; Gold-plated contacts |
| Free from silicone | | yes |
| **Electrical data** | | |
| Operating voltage | [V] | < 125 AC/DC |
| Max. current load total | [A] | 4;  (...40 °C) |
| **Operating conditions** | | |
| Ambient temperature | [°C] | -25...100 |
| Protection | | IP 68 |
| **Mechanical data** | | |
| Weight | [g] | 30.9 |
| Dimensions | [mm] | 35 x 20 x 30 |
| Materials | | PA |
| Moulded-body material | | PA |
| Material nut | | brass, nickel-plated |
| **Remarks** | | |
| Pack quantity | | 1 pcs. |

# E11714

## Wirable socket

SDOAH050MSSFKPG

### Electrical connection

screw terminals: ...0.75 mm²; Cable sheath: Ø 6...8 mm

### Electrical connection - socket

Connector: 1 x M12, angled; coding: A; Moulded body: PA; Locking: brass, nickel-plated; Contacts: gold-plated




### Connection

