MR501A

T-slot cylinder sensor with reed contact

MRT2021BAKOG/R/6,0M/ZH/3G/3D

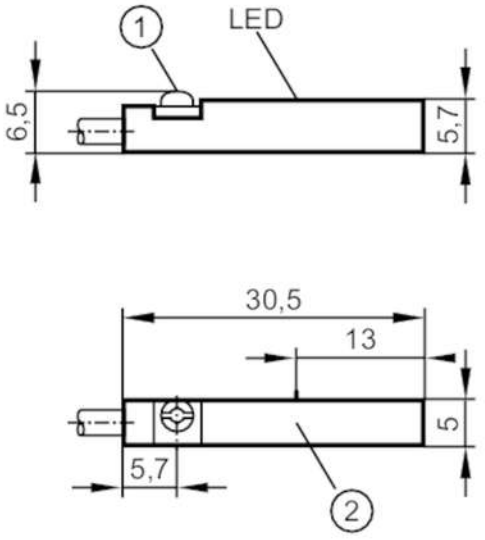

1 fastening clamp with combined slot / hexagon socket head hexagonal socket AF 1.5
2 Sensing face

Product characteristics		
Electrical design		PNP/NPN
Output function		normally open
Dimensions	[mm]	30.5 x 5 x 6.5
Electrical data		
Operating voltage	[V]	5...30 DC
Protection class		III
Reverse polarity protection		yes
Outputs		
Electrical design		PNP/NPN
Output function		normally open
Max. voltage drop switching output DC	[V]	5
Permanent current rating of switching output DC	[mA]	100; (External protective circuit for inductive load (valve, contactor, etc.) necessary.)
Max. switching power	[W]	5
Short-circuit protection		no
Overload protection		no
Detection zone		
Response sensitivity	[mT]	2.1
Travel speed	[m/s]	10
Accuracy / deviations		
Hysteresis	[mm]	< 1
Repeatability	[mm]	< 0.2

MR501A

T-slot cylinder sensor with reed contact

MRT2021BAKOG/R/6,0M/ZH/3G/3D

Response times			
Max. fall time	[ms]	0.1	
Max. make time incl. bounce	[ms]	0.6	
Operating conditions			
Ambient temperature	[°C]	-20...60	
Protection		IP 65; IP 67	
Tests / approvals			
ATEX marking		II 3D Ex tc IIIC T125°C Dc X	
		II 3G Ex nA IIC T4 Gc X	
EMC		EN 61000-4-2 ESD	- CD / 8 kV AD
		EN 61000-4-3 HF radiated	10 V/m
		EN 61000-4-4 Burst	2 kV
		EN 61000-4-6 HF conducted	10 V
		EN 55011	class B
MTTF	[years]	11303	
Mechanical data			
Weight	[g]	105.3	
Mounting		flush mountable	
Cylinder type		T-slot cylinders	
Dimensions	[mm]	30.5 x 5 x 6.5	
Materials		housing: PA; fastening clamp: stainless steel	
Displays / operating elements			
Display		switching status	1 x LED, yellow
Electrical connection			
Required protection		miniature fuse to IEC60127-2 sheet 1; ≤ 0,175 A; fast acting	
Accessories			
Items supplied		rubber placeholder: 1	
		Cable clip: 1	
		Protective cover: 1 x T-Nut, E12259	
Remarks			
Remarks		No LED function in case of polarity reversal in DC operation.	
		voltage supply to EN50178, SELV, PELV	
Pack quantity		1 pcs.	

MR501A

T-slot cylinder sensor with reed contact

MRT2021BAKOG/R/6,0M/ZH/3G/3D

Electrical connection

Cable: 6 m, PUR; 2 x 0.14 mm²

Connection

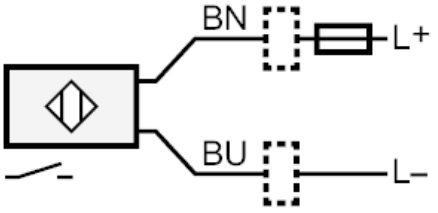

Note miniature fuse to IEC60127-2 sheet 1 ≤ 0.175 A fast acting
Core colours :

BN =	brown
BU =	blue