FIRST ANGLE PROJECTION

Colour	M200	M300	M400
RAL 7035 Grey	M5320105	M5330105	M5340105
RAL 9005 Black	M5320109	M5330109	M5340109

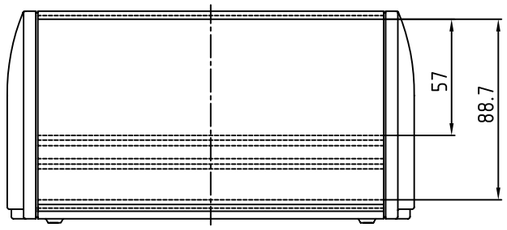

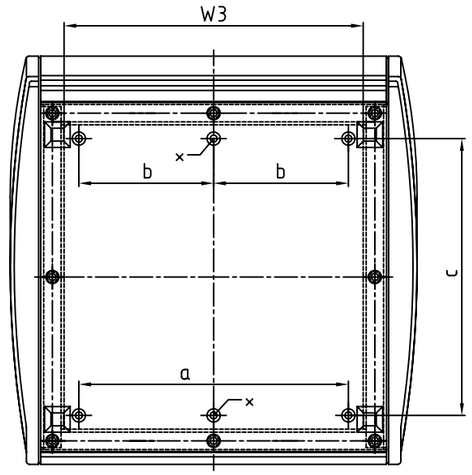

W	a	b	c	
200	132.5	-	136	Size Drawn
300	232.5	116.25	136	
400	332.5	166.25	136	

x Holes not on W=200

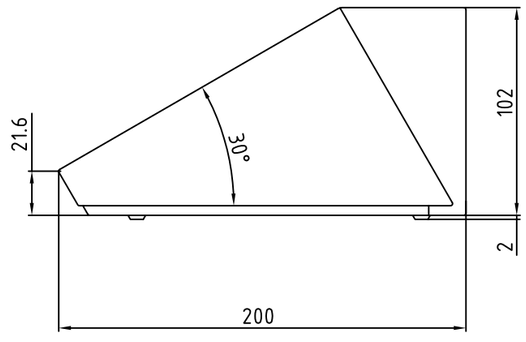

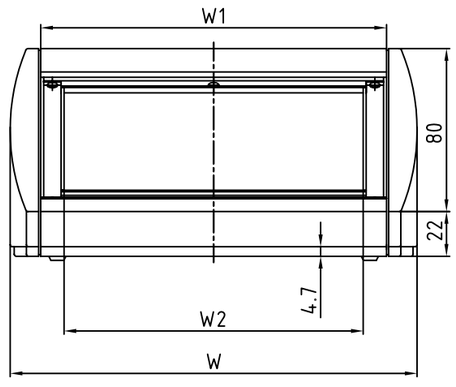

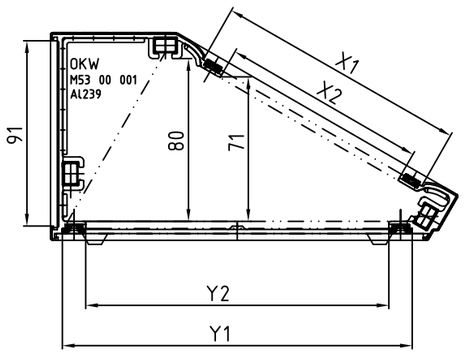

W	W1	Size	W2	W3	X1	X2	Y1	Y2
200	170	S	147	147	124	101	172	149
300	270	M	247	247	124	101	172	149
400	370	L	347	347	124	101	172	149

From May 2006, all cases are supplied with pull-up M3 fasteners to secure the front panel & base panel, rather than the original plastic M3 inserts. The quantity fitted is as follows:

Size	Front Pnl	Base Pnl
M200	4	8
M300	8	10
M400	6	12

Modifications	Iss
	1
Notes added about the introduction of pull-up M3 fasteners to secure front panel & base panel.	2
M300 case has 4 off extra pullup inserts to allow 8 off fixing points for the front panel. Ian - February '07.	3
Table added to show colour variation part numbers Ian - August '10	4

Tolerances unless otherwise stated:

General tolerances ±0.20
Resultant tolerances between hole centers ±0.15
Tolerances on hole diameters ±0.05
Angles ± 0.5°
Surface finish 3.2

Required Finish: See table
Scale:
ALL DIMENSIONS IN MILLIMETRES
DO NOT SCALE
Drawn by: Ian Cox
Checked By:
Drawing Number: 1013
Date drawn: August '05
Material Spec.: Aluminium

METcase™
www.metcase.com

METCASE ENCLOSURES
Unit 3, Mitchell Close
Segensworth East, Fareham,
Hampshire, PO15 5SE, UK.

Part Name: Unidesk Case Assemblies
Part Number: See Table
Sheet 1 of 1

©OKW ENCLOSURES LTD (DATE AS SHOWN). THIS DRAWING CONTAINS PROPRIETARY INFORMATION OF OKW ENCLOSURES LTD AND IS TENDERED SUBJECT TO THE FOLLOWING CONDITIONS: THE INFORMATION BE RETAINED IN CONFIDENCE, NOT BE REPRODUCED OR COPIED, AND NOT BE USED OR INCORPORATED IN ANY PRODUCT, UNLESS PERMISSION IS OBTAINED IN WRITING FROM OKW ENCLOSURES LTD.

A0