REVISIONS			
REV.	DESCRIPTION	DATE	APPROVED
F	ECN 10574: UPDATE CENTER PIN STRUCTURE	07/03/2020	SRAUTUS

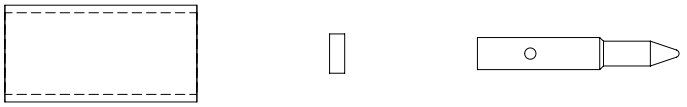

FERRULE

SNAP RING

CENTER PIN

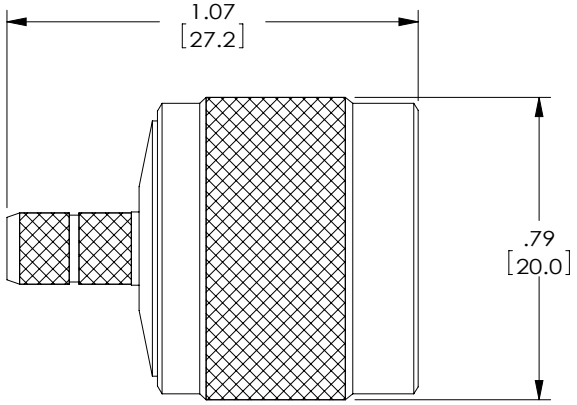

BODY

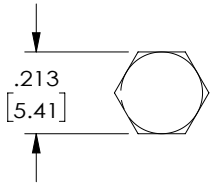

RECOMMENDED
FERRULE
CRIMP SIZE

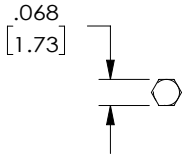

RECOMMENDED
PIN
CRIMP SIZE

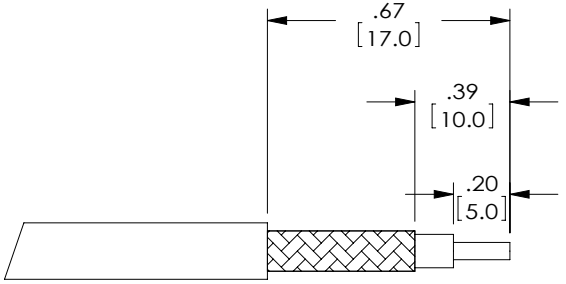

RECOMMENDED CABLE STRIPPING

REGULATORY COMPLIANCE:

EU RoHS DIRECTIVE (MOST RECENT RELEASED VERSION)

THESE COMMODITIES, TECHNOLOGY OR SOFTWARE WERE EXPORTED FROM THE UNITED STATES IN ACCORDANCE WITH THE EXPORT ADMINISTRATION REGULATIONS. DIVERSION CONTRARY TO U.S. LAW PROHIBITED.

UNLESS OTHERWISE SPECIFIED
LEADING DIMENSIONS ARE INCHES
DIMENSIONS IN [ ] ARE MILLIMETERS

TOLERANCES:

.X = ± .2	[5.08]	FRACTIONS
.XX = ± .02	[.51]	± 1/32
.XXX = ± .005	[.13]	ANGLES ± 1°

CABLE LENGTH (L) TOLERANCES:

L ≤ 12 [305] = +1 [25] / -0
12 [305] < L ≤ 60 [1524] = +2 [51] / -0
60 [1524] < L ≤ 120 [3048] = +4 [102] / -0
120 [3048] < L ≤ 300 [7620] = +6 [152] / -0
300 [7620] < L = +5%L / -0

ALL DIMENSIONS SHOWN
ARE FOR REFERENCE ONLY.

L-com™
an INFINITE brand
50 High Street, West Mill, 3rd Floor, Suite #30
North Andover, MA 01845 USA.
Phone: 1.800.341.5266 | 1.978.682.6936
Fax: 1.978.689.9484
Website: www.L-com.com
E-mail: CustomerService@L-com.com

THIRD-ANGLE PROJECTION

THE INFORMATION AND DESIGN IN THIS DOCUMENT IS THE PROPERTY OF L-COM GLOBAL CONNECTIVITY. ALL RIGHTS RESERVED.

SHEET	OF
1	1

SCALE: N/A

SIZE	CAGE CODE	DRAWN BY	ITEM NO.	REV
A	43321	DPURWIN	ANM-1700	F