Shock-Safe Fuseholder, 5 x 20 / 6.3 x 32 mm, Slotted Cap, horizontal



Socket with Slotted Cap
Caps must be ordered separately (see accessories)



Socket with Fingergrip Cap

250 VAC · 3.2 W / 10 A (VDE) 16 A (UL/CSA)

Description
- Kinked or straight PCB-terminals
- Horizontal style

Standards
- IEC 60127-6
- UL 512
- CSA C22.2 no. 39

Approvals
- VDE Certificate Number: 6946
- UL File Number: E39328
- CSA File Number: 38456

Weblinks
pdf-datasheet, html-datasheet, General Product Information, Approvals, CE declaration of conformity, RoHS, CHINA-RoHS, REACH, e-Shop, SCHURTER-Stock-Check, Distributor-Stock-Check, Accessories, Detailed request for product

Technical Data

Shock-Safe Category	PC2
Fuse-Link	5 x 20 or 6.3 x 32 mm
Mounting	PCB
Terminal	Solder THT
Rated Voltage	250 VAC
Rated current	10 A (VDE), 16 A (UL/CSA)
Rated Power Acceptance IEC	3.2 W / 10 A @ Ta 23 °C 2.5 W / 10 A for 5x20 mm fuse-link, see derating curves
Degree of Protection	IP 40
Protection Class	Suitable for appliances with protection class I or II acc. to IEC 61140
Admissible Ambient Air Temp.	-40 °C to 85 °C
Climatic Category	40/085/21 acc. to IEC 60068-1
Material: Socket	Thermoplastic, black, UL 94V-0
Material: Terminals	Tin-Plated Copper Alloy
Unit Weight	5.1 g / 2.3 g
Storage Conditions	0 °C to 60 °C, max. 70% r.h.
Product Marking	SCHURTER, Type, Rated voltage, Rated current, Approvals

Soldering Methods	Wave
Solderability	245 °C / 2 sec acc. to IEC 60068-2-20, Test Ta, method 1
Resistance to Soldering Heat	260 °C / 10 sec acc. to IEC 60068-2-20, Test Tb, method 1A
Contact Resistance	< 5 mΩ at 20 mV
Dielectric Strength	> 3 kV (50 Hz; 1 min)
Impulse Withstand Voltage	> 4 kV between L-N
Insulation Resistance	> 10 MΩ between L-N (500 VDC; 1 min)
Overvoltage Category	I - III acc. to IEC 60664-1
Pollution Degree	1 - 3 acc. to IEC 60664-1

Dimension

45 mm

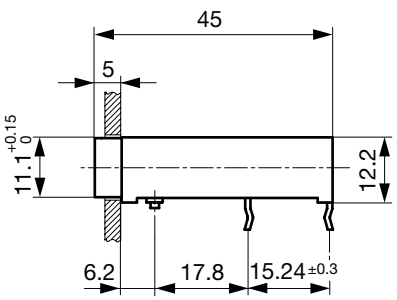

Variant 0031.3577

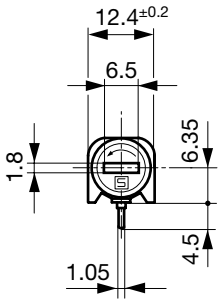

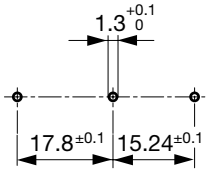

Drilling diagram

Derating Curves

5x20 mm

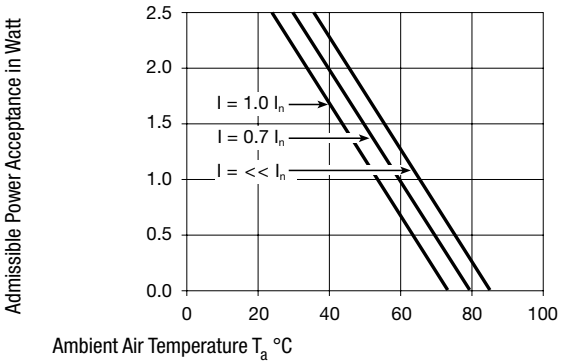

6.3x32 mm

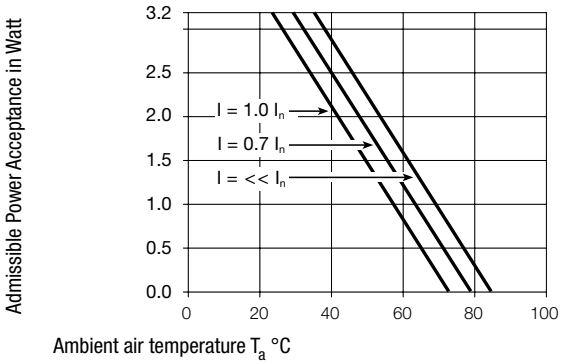

All Variants

Holder	Cap	Fuse-Link	Terminal	Degree of Protection	Colour Cap	Remark	Comment	Order Number
●	-	5 x 20 or 6.3 x 32mm	Straight	IP 40	-	-	-	0031.3573
●	-	5 x 20 or 6.3 x 32mm	Kicked	IP 40	-	-	-	0031.3577
●	slotted	6.3 x 32mm	Kicked	IP 40	grey	0031.3577 + 0031.1666	-	0031.3581
●	Fingergrip	6.3 x 32mm	Kicked	IP 40	-	0031.3577 + 0031.1667	-	0031.3583
●	slotted	5 x 20mm	Kicked	IP 40	-	0031.3577 + 0031.1663	-	0031.3571
●	Fingergrip	5 x 20mm	Kicked	IP 40	-	0031.3577 + 0031.1741	-	0031.3584

Most Popular.

Availability for all products can be searched real-time:http://www.schurter.com/en/Stock-Check/Stock-Check-SCHURTER

Packaging Unit Bulk (100 pcs.)

Required Accessory

Description



Fingergrip FEU, FAU, FAC
Caps Fingergrip for Holder FEU, FAU, FAC

Fingergrip, 6.3 x 32 mm, IP 40	0031.1667
Fingergrip, 5 x 20 mm, IP 40	0031.1741



Caps to FEU, FAU, FAC
Caps to Holder FEU, FEU (Med), FAU, FAC

slotted, 6.3 x 32 mm, black, IP 40	0031.1661
slotted, 5 x 20 mm, black, IP 40	0031.1663
slotted, 6.3 x 32 mm, grey, IP 40	0031.1666

06.05.2015

The specifications, descriptions and illustrations indicated in this document are based on current information. All content is subject to modifications and amendments. Information furnished is believed to be accurate and reliable. However, users should independently evaluate the suitability and test each product selected for their own applications.