Inductive sensor
NI75U-Q80-VP4X2-H1141

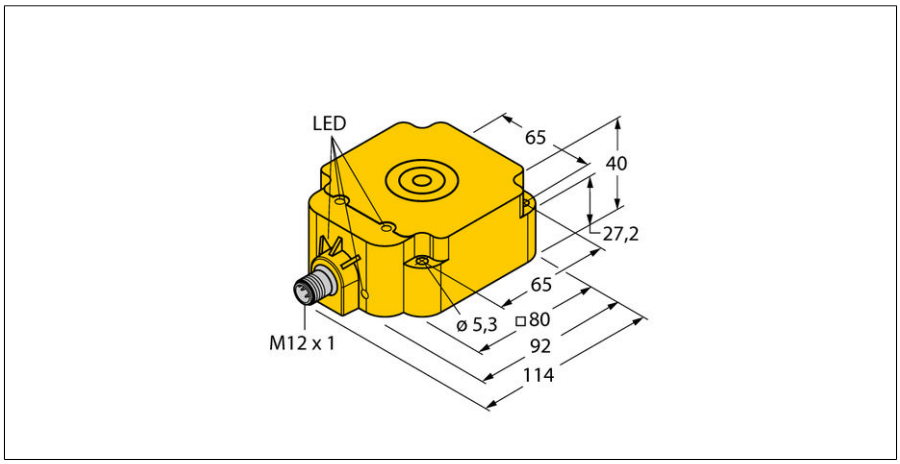

Type code	NI75U-Q80-VP4X2-H1141
Ident no.	1625857
Rated switching distance Sn	75 mm
Mounting conditions	non-flush, partially embeddable
Repeatability	≤ 2 % of full scale
Temperature drift	≤ ± 10 %
Hysteresis	3…15 %
Operating voltage	10… 65VDC
Residual ripple	≤ 10 % U_{ss}
DC rated operational current	≤ 200 mA
No-load current I_0	≤ 15 mA
Residual current	≤ 0.1 mA
Rated insulation voltage	≤ 0.5 kV
Short-circuit protection	yes
Voltage drop at I_e	≤ 1.8 V
Wire breakage / Reverse polarity protection	yes/ complete
Output function	4-wire, complementary, PNP
Protective insulation	⧈
Switching frequency	0.25 kHz
Construction	rectangular, Q80
Dimensions	92 x 80 x 40 mm
Housing material	plastic, PBT, yellow
Connection	flange connector, M12 x 1
Vibration resistance	55 Hz (1 mm)
Shock resistance	30 g (11 ms)
Protection class	IP68
MTTF	874 years acc. to SN 29500 (Ed. 99) 40 °C
Power-on indication	LED green
Switching state	LED yellow

- **Rectangular, height 40 mm**
- **Active face on top**
- **Plastic, PBT-GF30-V0**
- **4 LEDs for optimum view on supply voltage and switching state from any position**
- **Factor 1 for all metals**
- **Increased switching distance**
- **Protection class IP68**
- **Resistant to magnetic fields**
- **Auto-compensation protects against pre-attenuation**
- **Partially embeddable**
- **DC 4-wire, 10…65 VDC**
- **Changeover contact, PNP output**
- **M12 x 1 male connector**

Wiring Diagram

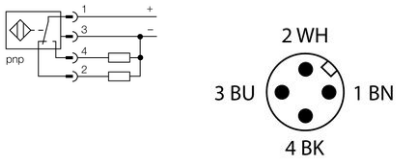

Functional principle

Inductive sensors detect metal objects contactless and wear-free. Due to the patented multi-coil system, *uprox*®+ sensors have distinct advantages over conventional sensors. They excel in largest switching distances, maximum flexibility and operational reliability as well as efficient standardization.

Edition • 2016-02-12T11:36:10+01:00

Distance D	240 mm
Distance W	225 mm
Distance S	60 mm
Distance G	450 mm
Distance A	20 mm
Distance C	80 mm

Width of the active face B	80 mm

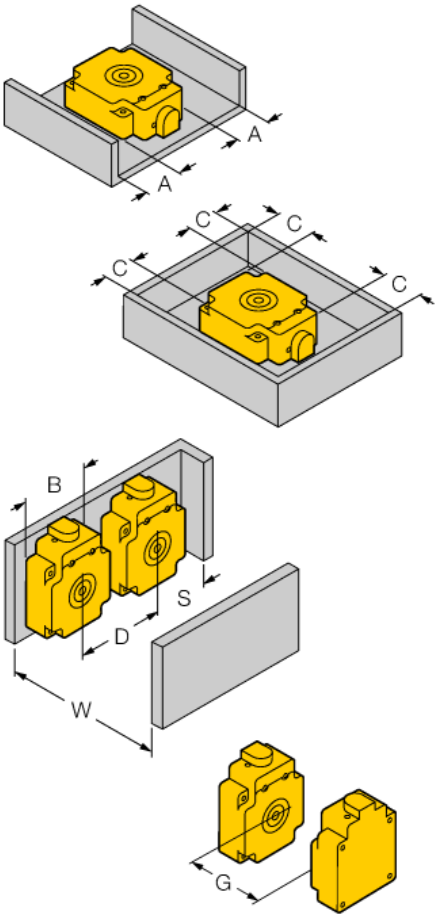

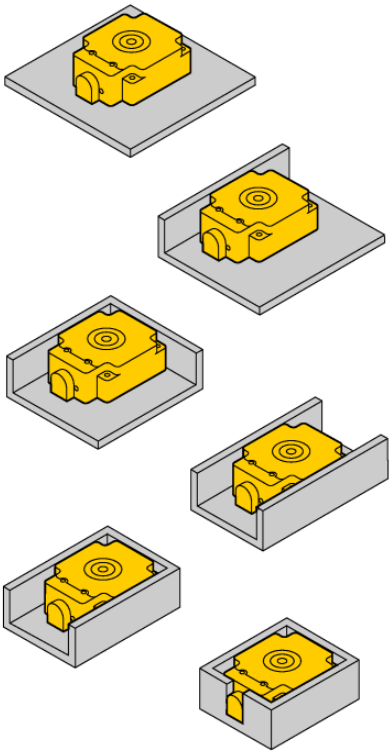

Mounting on metal: Sr = 75 mm

1-side mounting: Sr = 50 mm

2-side mounting: Sr = 45 mm

3-side mounting: Sr = 40 mm

4-side mounting: Sr = 40 mm

recessed mounting without metal baseplate: Sr = 65 mm

The values stated relate to a 1 mm thick steel plate.

Switching distances with different target sizes:

Sheet steel 150 x 150 mm: Sn = 65 mm
Sheet steel 60 x 60 mm: Sn = 50 mm
Sheet steel 40 x 40 mm: Sn = 40 mm
Sheet steel 120 x 40 mm: Sn = 45 mm (simulation of a skid runner)

Edition • 2016-02-12T11:36:10+01:00

Wiring accessories

Type code	Ident no.	Description	Design
RKC4.4T-2/TEL	6625013	Connection cable, female M12, straight, 4-pin, cable length: 2 m, sheath material: PVC, black; cULus approval; other cable lengths and qualities available, see www.turck.com	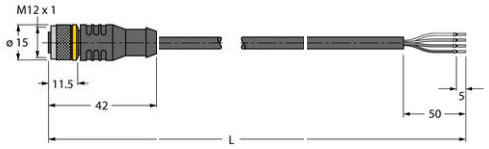

Edition • 2016-02-12T11:36:10+01:00