RAFIX 16 F, illuminated pushbutton, flat bezel, round collar, bezel green



fields of application

- Measurement-control-regulation
- Electrical engineering
- Mechanical and system engineering
- Vehicle construction

special features

- Transparent panels, illuminable
- Lettering with inserts possible
- Flat construction
- Robust - also suitable for operation with gloves
- Degree of protection: IP 65 at the front
- Separate switching elements required
- Close mounting of actuators possible due to axial wiring from behind
- Switching elements with silver contacts (max. 250 V / 6 A) or gold contacts (max. 35 V / 0.25 A)
- Connection types: screw connection, plug-in connection, PCB plug-in socket

description

RAFIX command devices are modular units consisting of several parts. In the RAFIX 16 F product family, these always consist of an actuating element and a switching element, or an indicator lamp and a lamp socket. Actuating elements (such as pushbuttons or emergency stop actuators) have the specified tactility, reset and function only when assembled with the appropriate switching elements. For illuminated actuators, please use switching elements with lamp socket.

For RAFIX 16F actuators, you can choose between two collar shapes: round and square. Both are characterized by an extremely flat design. The round collar shape has an anti-rotation lug that can be easily removed with a screwdriver if necessary. The square actuators can be placed collar to collar to create a closed keypad.

technical data

general

Bezel color	green
Property of bezel / mushroom	transparent
Collar color	metallic silver
Collar shape	round
Operating temperature, min.	-25 °C
Operating temperature, max.	70 °C
Storage temperature, min.	-40 °C
Storage temperature, max.	85 °C
illuminated	Yes

direct links

- RAFI eCatalog

The information in this data sheet only contains general descriptions and / or performance features, which may not apply precisely as described to the respective application, and which my change due to further product enhancements. The technical data, illustrations and other information about our products are the mere results of individual technical testing. These descriptions and other product features are only binding if they expressly agreed upon at the time of the conclusion of a binding contract. In all other cases, we reserve the right to make technical changes as well as changes of availability. Pictures and other graphic illustrations are approximations only. All product names may be trademarks or brand names of the RAFI Group or any other sub-supplier of RAFI. The use of such by any third parties for their own purposes may infringe the rights of the respective entity holding those rights.

RAFI GmbH & Co. KG

Ravensburger Str. 128-134
88276 Berg / Ravensburg
Germany
www.rafi-group.com,
info.headquarters@rafi-group.com

Packaging	Box
Packaging unit	10 pcs.
net weight	7.8 g
Operating life	2,000,000 cycles
B10	2,600,000 cycles
Degree of protection, front side, according to DIN EN 60529	IP65
Environment resistance	IEC 60068-2-14 IEC 60068-2-30 IEC 60068-2-33 IEC 60068-2-78
Protection class	II
MOQ order	100 pcs.
RoHS compliant	Yes
REACH compliant	Yes

mounting diameters

Outside dimension, length	28 mm
Outside dimension, width	28 mm
Outside dimension, height	26.2 mm
Mounting hole	22.3 mm
Mounting depth	50 mm
Installation height	1.9 mm
Grid, min.	30 x 30 mm
Collar dimension	ø 28 mm

mechanical data

Operating force, max.	100 N
Fixing	Threaded ring
Threaded ring torque, max.	1.2 Nm

The information in this data sheet only contains general descriptions and / or performance features, which may not apply precisely as described to the respective application, and which my change due to further product enhancements. The technical data, illustrations and other information about our products are the mere results of individual technical testing. These descriptions and other product features are only binding if they expressly agreed upon at the time of the conclusion of a binding contract. In all other cases, we reserve the right to make technical changes as well as changes of availability. Pictures and other graphic illustrations are approximations only. All product names may be trademarks or brand names of the RAFI Group or any other sub-supplier of RAFI. The use of such by any third parties for their own purposes may infringe the rights of the respective entity holding those rights.

RAFI GmbH & Co. KG

Ravensburger Str. 128-134
88276 Berg / Ravensburg
Germany
www.rafi-group.com,
info.headquarters@rafi-group.com

drawings

Mounting hole drawing

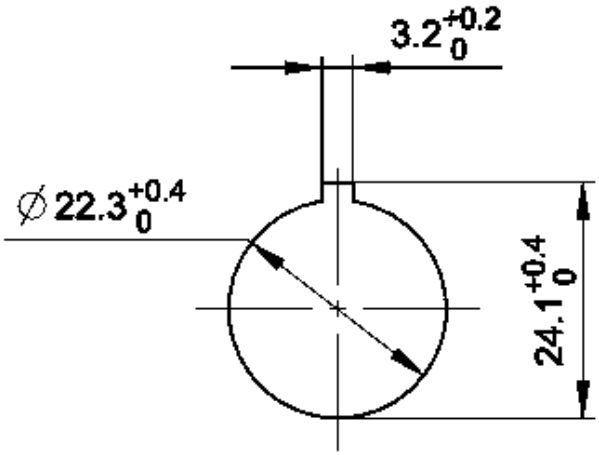

acc. to IEC 60947-5-1

The information in this data sheet only contains general descriptions and / or performance features, which may not apply precisely as described to the respective application, and which my change due to further product enhancements. The technical data, illustrations and other information about our products are the mere results of individual technical testing. These descriptions and other product features are only binding if they expressly agreed upon at the time of the conclusion of a binding contract. In all other cases, we reserve the right to make technical changes as well as changes of availability. Pictures and other graphic illustrations are approximations only. All product names may be trademarks or brand names of the RAFI Group or any other sub-supplier of RAFI. The use of such by any third parties for their own purposes may infringe the rights of the respective entity holding those rights.

RAFI GmbH & Co. KG

Ravensburger Str. 128-134
88276 Berg / Ravensburg
Germany
www.rafi-group.com,
info.headquarters@rafi-group.com