- **Port size: 3/8” ... 3/4” (ISO G/NPT)**
- **Excelon design allows in-line or modular installation**
- **Push to lock adjusting knob with tamper resistant accessory**



Technical features

Medium:
Compressed air only
Maximum operating pressure:
20 bar (300 psi)
Pressure range:
Standard:
0,3 ... 10 bar (4 ... 145 psi)
Optional:
0,3 ... 4 bar (4 ... 58 psi)
0,7 ... 17 bar (10 ... 250 psi)

Port size:
G3/8, G1/2, G3/4,
3/8 PTF 1/2 PTF , 3/8 PTF
Gauge port:
Rc 1/8 with ISO G main ports
1/4 PTF with PTF main ports
Flow:
105 dm^3/s maximum
At port size: 1/2”
Inlet pressure 10 bar (145 psi);
6,3 bar (91 psi) set pressure and a
Δp: 1 bar (14,5 psi) droop from set.

Return valve:
R74G – without return valve
R74R – with return valve
Ambient/Media temperature:
-34° ... +80°C (-30° ... +176°F)
Version with gauge:
-34° ... +65°C (-30° ... +149°F)
Air supply must be dry enough to avoid ice formation at temperatures below +2°C (+35°F).

Materials:
Body & Bonnet: Die cast aluminium
Bottom plug: Acetal
Elastomers: NBR

Technical data R74G - standard models

Symbol	Port size	Size	Pressure range (bar)	Adjustment	Weight (kg)	Model
	G3/8	—	0,3 ... 10	Knob	0,82	R74G-3GK-RMN
	G1/2	Basic	0,3 ... 10	Knob	0,80	R74G-4GK-RMN
	G3/4	—	0,3 ... 10	Knob	0,78	R74G-6GK-RMN

Technical data R74R - Reverse flow

Symbol	Port size	Size	Pressure range (bar)	Adjustment	Weight (kg)	Model
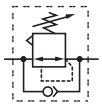	G3/8	—	0,3 ... 10	Knob	0,82	R74R-3GK-RMN
	G1/2	Basic	0,3 ... 10	Knob	0,80	R74R-4GK-RMN
	G3/4	—	0,3 ... 10	Knob	0,78	R74R-6GK-RMN

Option selector

R74★-★★★-★★★

Return valve	Substitute
Without (standard)	G
Integrated	R
Port size	**Substitute**
3/8”	3
1/2”	4
3/4”	6
Thread form	**Substitute**
PTF	A
ISO G parallel (standard)	G
Adjustment	**Substitute**
Knob (standard)	K
T-bar	T*1)

*1) Units with 17 bar outlet pressure range are available only with the T-bar adjustment; therefore substitute T at the 7th position and S at the 9th position.

Gauge	Substitute
With	G
Without (standard)	N
Outlet pressure adjustment range *2)	**Substitute**
0,3 ... 4 bar	F
0,3 ... 10 bar (standard)	M
0,7 ... 17 bar	S*1)
Diaphragm	**Substitute**
Relieving (standard)	R
Non relieving	N

*2) Outlet pressure can be adjusted to pressures in excess of, and less than, those specified. Do not use these units to control pressures outside of the specified ranges.

Our policy is one of continued research and development. We therefore reserve the right to amend, without notice, the specifications given in this document. (1998 - 8059b) © 2015 Norgren Inc.

Flow characteristics

Inlet pressure: 10 bar (145 psi)
Port size: 1/2”

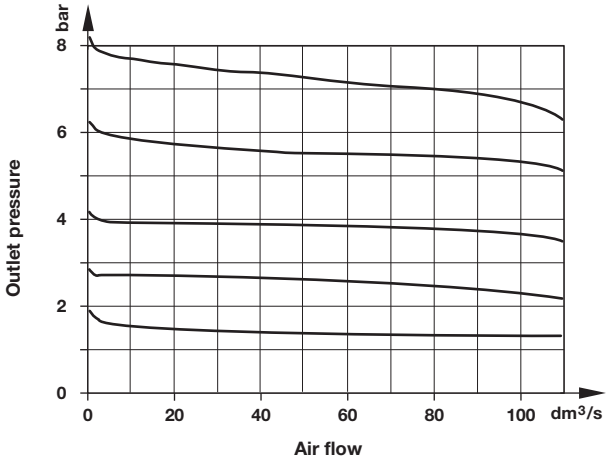

Inlet pressure: 7 bar (101 psi)
Port size: 1/2”

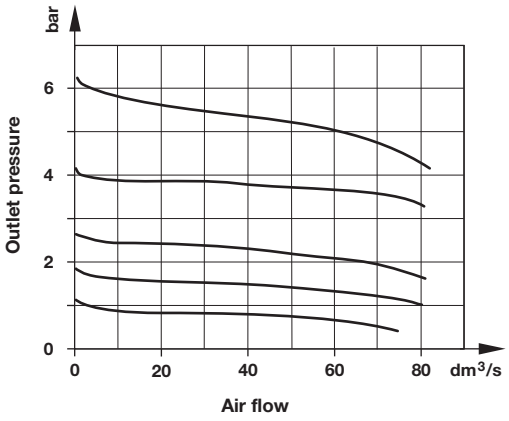

Accessories

Wall mounting bracket	Quikclamp®	Quikclamp with wall bracket®	Neck mounting bracket	Panel nut	Tamper resistant kit
					
Page 4	Page 3	Page 3	Page 4		
4324-50	4314-51	4314-52	4368-51	4348-89	4355-51

Quikmount pipe adaptor	Porting block with three alternative 1/4” ports	2/2 Shut-off valves (for full technical specification see datasheet 8.200.600)	3/2 Shut-off valves (for full technical specification see datasheet 8.200.600)
			
Page 3	Page 3	Page 4	Page 4
G3/8: 4315-10	G1/4: 4316-52	G 3/8: T74B-3GA-P1N	G 3/8: T74T-3GA-P1N
G1/2: 4315-11	1/4 PTF: 4316-50	G 1/2: T74B-4GA-P1N	G 1/2: T74T-4GA-P1N
G3/4: 4315-12		G 3/4: T74B-6GA-P1N	G 3/4: T74T-6GA-P1N
3/8 PTF: 4315-02			
1/2 PTF: 4315-03			1/2 PTF: T74T-4AA-P1N
3/4 PTF: 4315-04		3/4 PTF: T74B-6AA-P1N	3/4 PTF: T74T-6AA-P1N

*1) Please use a Quikmount pipe adaptor if the Quikclamp be mounted at inlet or outlet side.

Pressure switch

Porting block for pressure switch	Pressure switch (0,5 ... 8 bar)
	
Page 4	
0523110000000000	0881300000000000

Padlock

Padlock (brass) with two keys *1)

0613633000000000

*1) For shut-off valves and tamper resistant kit

Service kits

Service kit

R74G-KITR

Our policy is one of continued research and development. We therefore reserve the right to amend, without notice, the specifications given in this document. (1998 - 8059b) © 2015 Norgren Inc.

Gauge

Center back connection, white face (for full technical specification see datasheet 8.900.900)



Pressure range bar *1	MPa	psi	Ø	Thread size	Model
0 ... 6	0 ... 0,6	0 ... 84	50 mm	R1/8	18-015-012
0 ... 10	0 ... 1	0 ... 145	50 mm	R1/8	18-015-013
0 ... 25	0 ... 2,5	0 ... 362	50 mm	R1/8	18-015-014

*1) primary scale

Center back connection, black face for North America (for full technical specification see datasheet 8.900.900)



Pressure range

psig *1	bar	MPa	Ø	Thread size	Model
0 ... 60	0 ... 4	0 ... 0.4	2" (50 mm)	1/4 NPT	18-015-208
0 ... 160	0 ... 11	0 ... 1.1	2" (50 mm)	1/4 NPT	18-015-209
0 ... 300	0 ... 20	0 ... 2.1	2" (50 mm)	1/4 NPT	18-015-210

*1) primary scale

Drawings

Dimensions in mm
Projection/First angle

Standard

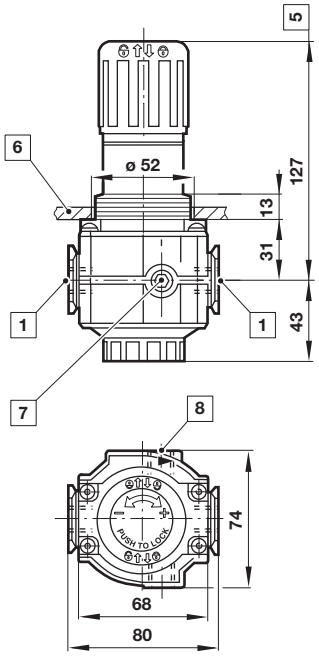

T-bar

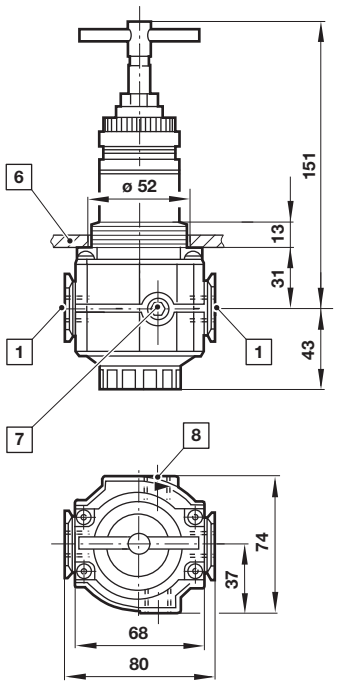

1 Main ports 3/8 ", 1/2" or 3/4"
5 Reduces by 4 mm with knob in locked position
6 Panel thickness 2 ... 6 mm
7 Gauge port Rc1/8 for ISO G and 1/4 PTF for PTF main ports
8 Alternative gauge port plugged

Accessories

Quikclamp®

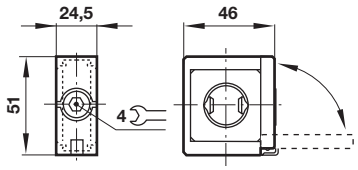

Quikclamp® with wall bracket

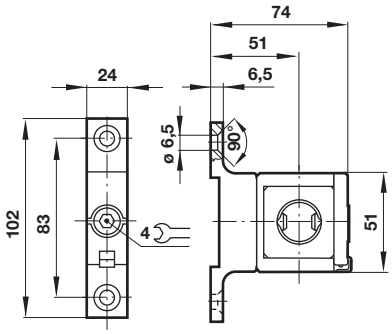

Porting block

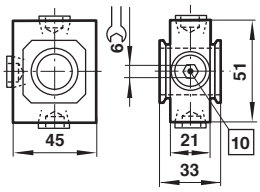

10 Ports 1/4" ISO G/PTF plugged

Pipe adapter

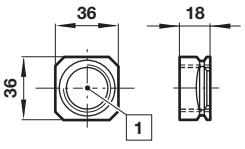

1 Main ports 3/8", 1/2" or 3/4" ISO G/PTF

Our policy is one of continued research and development. We therefore reserve the right to amend, without notice, the specifications given in this document. (1998 - 8059b) © 2015 Norgren Inc.

Wall mounting bracket

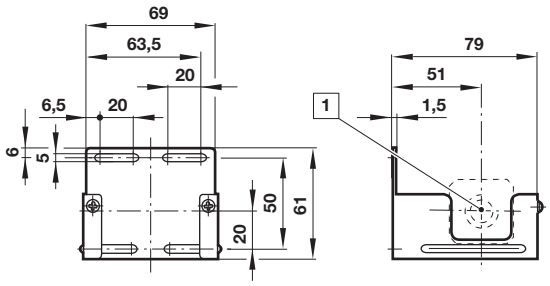

1 Main ports

Wall mounting bracket

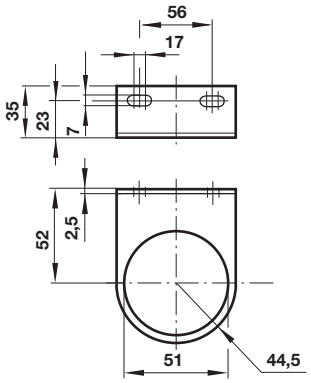

Shut-off valves

Dimensions in mm
Projection/First angle

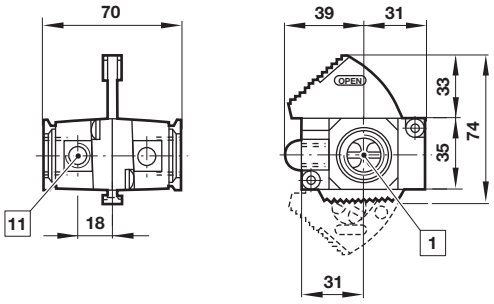

1 Main ports 3/8", 1/2" or 3/4" ISO G/PTF
11 Exhaust port Rc1/8 at 3/2 valve only

Porting block for pressure switch

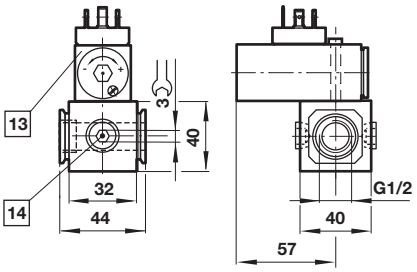

13 Pressure switch is not in scope of delivery
14 Alternative G1/4 ports plugged

Warning

These products are intended for use in industrial compressed air systems only. Do not use these products where pressures and temperatures can exceed those listed under **»Technical features/data«**.
Before using these products with fluids other than those specified, for non-industrial applications, life-support systems or other applications not within published specifications, consult IMI Precision Engineering, Norgren GmbH.
Through misuse, age, or malfunction, components used in fluid power systems can fail in various modes.

The system designer is warned to consider the failure modes of all component parts used in fluid power systems and to provide adequate safeguards to prevent personal injury or damage to equipment in the event of such failure.
System designers must provide a warning to end users in the system instructional manual if protection against a failure mode cannot be adequately provided.
System designers and end users are cautioned to review specific warnings found in instruction sheets packed and shipped with these products.

Our policy is one of continued research and development. We therefore reserve the right to amend, without notice, the specifications given in this document. (1998 - 8059b) © 2015 Norgren Inc.