

Bellows couplings provide cost-effective connection of the motor and encoder. They are also able to correct any angular errors between the drive and encoder.

These bellows couplings (FS) are used for safe connection of applications and Sendix SIL encoders.

The safety-oriented bellows coupling has, in addition to the metallic bellows, internal claws that ensure the driving of the encoder in case of breakage of the bellows connection.

Order code Couplings

8.0000	.	1	X	FS	.	XX	XX
Type			ⓐ			ⓑ	ⓒ

ⓐ *Type of coupling*
5 = bellows coupling ø 25 mm [0.98"]

ⓑ *Bore diameter d1*
(see technical data)

ⓒ *Bore diameter d2*
(see technical data)

Example: d1 = 10 mm and d2 = 12 mm
Order No. = 8.0000.15FS.**1012**

Accessories		Order no.
Screw retention	Loctite 243, 5 ml	**8.0000.4G05.0000**

Technical data

Mechanical characteristics

Max. speed		10000 min^{-1}
Max. torque		200 Ncm
Max. shaft offset	radial	± 0.3 mm
	axial	± 0.45 mm
	angular	± 3°
Torsion spring stiffness		183 Nm/rad
Radial spring stiffness		17.8 N/mm
Moment of inertia		9.1 gcm^2
Headless set screw tightening torque	min.	80 Ncm
	max.	100 Ncm

Working temperature range		-30°C ... +120°C [-22 ... +248°F]
Weight approx.		54 g
Material	flange	stainless steel 1.4104
	bellows	stainless steel 1.4571
Standard bore diameter	(d1 / d2)	10 / 10 mm [0.39 / 0.39"]
		10 / 12 mm [0.39 / 0.47"]
		12 / 12 mm [0.47 / 0.47"]
Insertion depth	min.	6 mm [0.24"]
	max.	11 mm [0.43"]

Dimensions

Dimensions in mm [inch]

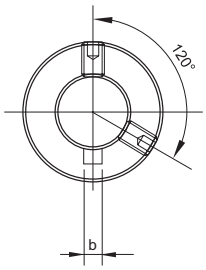

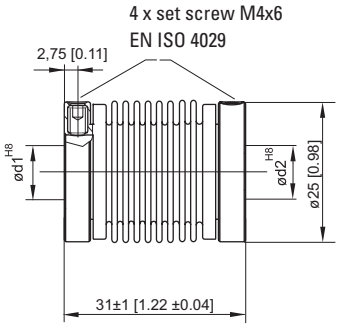

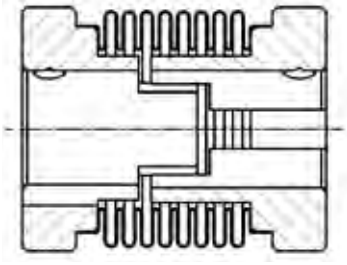

Nut DIN 6885

nut width b	d1 / d2
3 [0.12]	10 [0.39]
4 [0.16]	12 [0.47]

© Fritz Kübler GmbH, subject to errors and changes. 10/2015