TECHNICAL DATA SHEET

This range of Xenon beacons is suitable for internal or external use where a much more powerful extra bright warning signalling is required. They produce 24 Joules of flash energy at 60 FPM & when the double flash option is chosen the beacon produces 24 Joules first flash and 18 Joules on the second flash. The light is emitted through 360° around the vertical axis and 180° above the horizontal axis. Due to the power rating of the beacon, it is not recommended for use in excess of 12 hours in any 24 hours period.

Part Code:	Voltage:	Light Source:	Current:
X501-18 •	12/24v Dc ---	Xenon 24J/18J	2.6/1.30 A
X500-21	115v Ac ~	Xenon 24J/18J	0.65 A
X500-22	230v Ac ~	Xenon 24J/18J	0.40 A

• Pre-set to 24v

Lens Colour Selection
01 = Amber, **02** = Red, **03** = Blue, **04** = Green, **05** = Clear.

Bilateral Current Limiter

The Dc unit (X501) is supplied with a separate bilateral current limiter (XS0104). It **must** be installed (one per beacon) in all installations. It should be mounted at a convenient point within the power supply (or in a separate conduit box) using the two self adhesive pillars provided. The current limiter runs hot (100°c) in normal operation. All wiring should be positioned so that it does not come into contact with the device.

There will be a 3 second delay (12 seconds 12v) between switching power to the beacon and it starting to flash.

Note: do not re-start the beacon within five minutes of switch 'OFF' to ensure the current limiter is working at maximum capacity.

Key Features

- Terminals except up to 1.5mm² cable
- Ingress Protection: Weatherproof to IP65
- Case Material: UV Stable Polycarbonate Lens, UV Stable ABS Base
- Operating Temperature: -25°c to +35°c
- AC Supply: 50/60Hz as standard

Optional Equipment

- 50004 Mounting Bracket
- 50010 Cage Guard (cannot be used in conjunction with wall brackets)

MOFLASH SIGNALLING

INSTALLATION & TECHNICAL INFORMATION

PLEASE READ PRIOR TO INSTALLATION



X501/500 Series - (Xenon/Strobe)

XENON EXTRA HIGH OUTPUT VISUAL SIGNALLING DEVICES

APPROVALS AND CONFORMITIES

Website: www.moflash.com **Email: technical@moflash.co.uk**

INSTALLATION DATA SHEET

Connection to this type of unit is either into the three way barrier strip situated in the base of the unit (standard connection) - see diagram 1 or via the M20 side conduit entry. If M20 is the preferred method, then the two wires in the barrier strip in the base need to be unscrewed and freed from the barrier strip. Un-screw 3x No:4 screws that retain the base plate & carefully remove, threading the wires through the aperture. Un-screw the same two wires from the internal terminal block. Carefully drill out the M20 entry & using the appropriate cable gland, insert power cable into unit connecting to the internal terminal block.

DC CONNECTIONS – Are made to the '+' positive & '-' negative terminals of the beacon via the XS0104 Bilateral Current Limiter. (see diagram 2).

The beacon is pre-set to operate from a 24v Dc supply. To operate from a 12v Dc supply move the Voltage selection slide switch to '12v', (see picture 1).

The beacon is pre-set for 60 FPM. To operate at 90 FPM move the Flash Rate Selection Links from * to ** position.

AC CONNECTIONS – Are made directly to the 'L' live & 'N' neutral terminals of the beacon.

The beacon is pre-set to 60FPM. To operate at 90 FPM move the Flash Rate Selection slide switch from *to ** position, (see picture 2).

The beacon terminals of both beacons are polarity conscious.

Screw base plate back into position. Fix base to the required surface using the rubber gasket (supplied) with 3 x M6 Hex set screws and nuts (not supplied).

General Installation Notes

- Installation must be carried out in accordance with the latest codes and regulations by a qualified electrician.
- Do not handle electronic components whilst wiring up, unless indicated above.
- Ensure power is disconnected prior to installation or maintenance.
- Xenon type units must be left for a minimum of 15 minutes after power has been disconnected before maintenance can begin.
- When installing the DC unit the supply must be smoothed & rectified.
- Environmental exposure conditions during installation should be dry, not moist or wet.
- The lens of the unit is Polycarbonate Plastic. Do not clean with petroleum based cleaners.
- For all installations, mount the beacon with the lens above the base. Any other mounting position will impair the IP rating (Ingress Protection) and shorten the working life of the beacon.
- Avoid mounting the beacon where it will be subject to excessive vibration.

X501/500 Series

Diagram 1
Beacon Detail

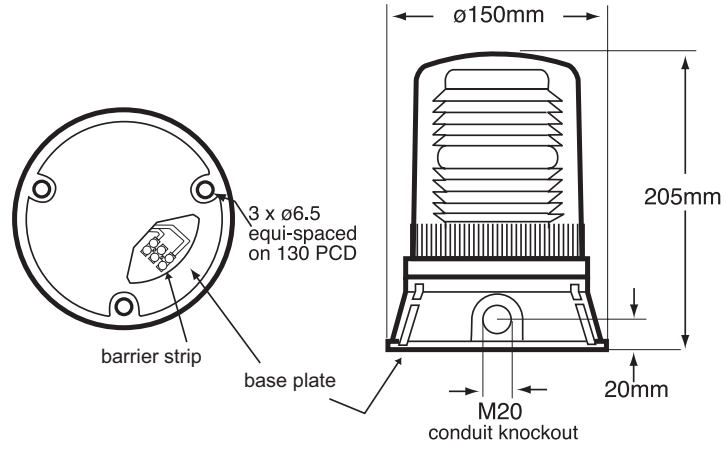

Diagram 2
External Dc Connections

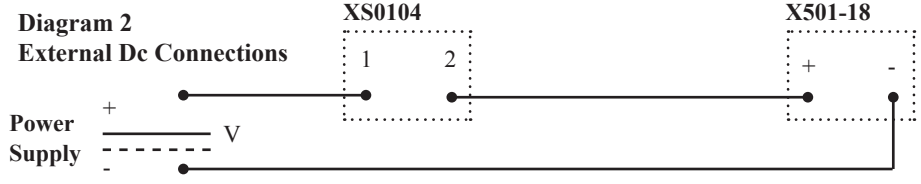

Picture 1 (X501-) Internal Dc Detail

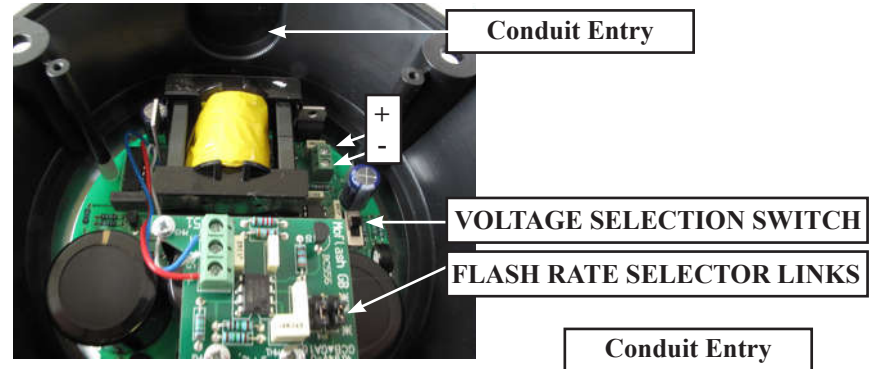

Picture 2
(X500-) Internal Ac Detail

