PT0507

Pressure transmitter

PT-001-AFG14-A-ZVG/US

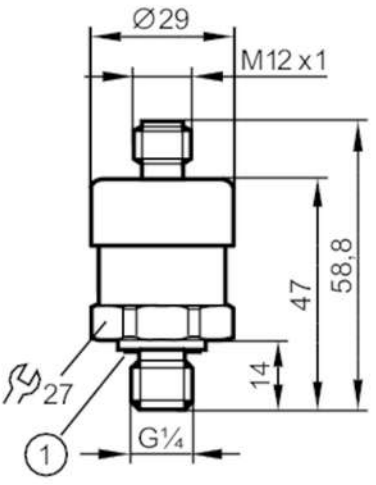

1 Sealing

Product characteristics				
Number of inputs and outputs	Number of analogue outputs: 1			
Measuring range	0...1 bar	0...1000 mbar	0...14.5 psi	0...100 kPa
Process connection	threaded connection G 1/4 external thread (DIN EN ISO 1179-2)			
Application				
Application	for industrial applications			
Media	liquids and gases			
Medium temperature [°C]	0...80			
Min. bursting pressure	5 bar	72 psi	500 kPa	
Pressure rating	2 bar	29 psi	200 kPa	
Type of pressure	absolute pressure			
Electrical data				
Operating voltage [V]	8...30 DC			
Min. insulation resistance [MΩ]	100; (500 V DC)			
Protection class	III			
Reverse polarity protection	yes			
Inputs / outputs				
Number of inputs and outputs	Number of analogue outputs: 1			
Outputs				
Total number of outputs	1			
Output signal	analogue signal			
Number of analogue outputs	1			
Analogue current output [mA]	4...20			
Max. load [Ω]	800; (Ub = 24 V; (Ub - 8 V) / 20 mA)			
Short-circuit proof	yes			
Measuring/setting range				
Measuring range	0...1 bar	0...1000 mbar	0...14.5 psi	0...100 kPa

PT0507

Pressure transmitter

PT-001-AFG14-A-ZVG/US

Accuracy / deviations		
Repeatability [% of the span]	< ± 0,1; (with temperature fluctuations < 10 K)	
Characteristics deviation [% of the span]	< ± 1,0; (incl. zero point and span error, non-linearity, hysteresis)	
Linearity deviation [% of the span]	< ± 0,5 (BFSL) / < ± 1,0 (LS)	
Long-term stability [% of the span]	< ± 0,1; (per year)	
Temperature coefficient zero point [% of the span / 10 K]	< ± 0,2; (0...80 °C)	
Temperature coefficient span [% of the span / 10 K]	< ± 0,2; (0...80 °C)	
Response times		
Step response time analogue output [ms]	4	
Operating conditions		
Ambient temperature [°C]	0...80	
Storage temperature [°C]	-20...80	
Protection	IP 67	
Tests / approvals		
EMC	DIN EN 61326-1	
Shock resistance	DIN EN 60068-2-27	500 g (1 ms)
Vibration resistance	DIN EN 60068-2-6	10 g (10...2000 Hz)
MTTF [years]	815	
Pressure Equipment Directive	Sound engineering practice; can be used for group 2 fluids; group 1 fluids on request	
Mechanical data		
Weight [g]	116.5	
Housing	cylindrical	
Dimensions [mm]	Ø 29 / L = 58.8	
Materials	stainless steel (316L/1.4404); HNBR; PA	
Materials (wetted parts)	stainless steel (316L/1.4404)	
Min. pressure cycles	10 million	
Tightening torque [Nm]	25...35; (recommended tightening torque; depends on lubrication, seal and pressure rating)	
Process connection	threaded connection G 1/4 external thread (DIN EN ISO 1179-2)	
Process connection sealing	NBR (DIN EN ISO 1179-2)	
Fill fluid for pressure transmission	synthetic oil	
Restrictor element integrated	no	
Remarks		
Remarks	BFSL = Best Fit Straight Line LS = limit value setting	
Pack quantity	1 pcs.	

PT0507

Pressure transmitter

PT-001-AFG14-A-ZVG/US

Electrical connection

Connector: 1 x M12; coding: A



Connection

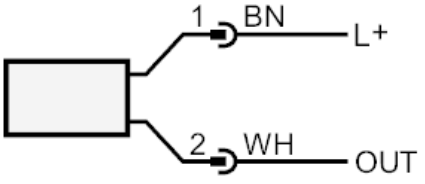

OUT	analogue output
	colours to DIN EN 60947-5-2
	Core colours :
BN =	brown
WH =	white