LED dual function displays | Universal with dual functions, 4 combinations (DC) | Codix 52U



The Codix 52U is a voltage-powered dual function counter with 4 functions in one device:

Counter with 2 totalizing ranges, totalizer and timer, totalizer and frequency meter, timer with 2 time ranges.
For fast and slow count pulses, with 6-digit LED display for NPN, PNP input signals.



Powerful

- Fast count and frequency input – input frequency max. 60 kHz (can be damped to 30 Hz for mechanical contacts).
- Robust housing – IP65 protected.
- Very bright LED display, 8 mm high, 6 digits.
- Very accurate precise frequency measurement principle (HRA-High Rate Accuracy System)
  Frequencies up to 38 Hz are calculated using time-interval (period duration) measurement. Frequencies > 38 Hz are calculated using a special time base (gate time) measurement. A very high accuracy of < 0.1 % is achieved, even with very short gate times. The resulting measurement is available after a max. of 50 ms.
- Short start-up time – detects input pulses just 16 msec after being switched on => no pulses are lost with a simultaneous motor start-up.

User-friendly and universal

- Large keys – can also be operated when wearing gloves.
- Programming:
  - Simple uniform menu-driven programming and operation.
  - Possible to enter the programming also during operation with a confirmation prompt.
  - Pressing the right key switches between displays.
- Individually programmable scaling:
  multiplication and division factor (0.0001…99.9999), to display corresponding engineering units, e.g. position in 1/10 mm and speed in RPM.
- Separate factors for frequency- and pulse counting.
- Inputs: as an alternative to the HTL inputs, devices are available with a 4 ... 30 V DC input level, for use as parallel displays to PLCs.
- Timer specials: timer or hours-run meter with various Start/Stop measurements, time range settings in hours, minutes or seconds, with decimal point. Resolutions up to 1/1000 can be programmed.

Order code

6.52U	.	01	2	.	3	X ⓐ	0

ⓐ *Input switching level*
0 = Standard (HTL) [1)]
A = 4 ... 30 V DC

Delivery specification
- Counter
- Mounting clip
- Front bezel for screw mounting (T008181) 56 x 40 mm [2.20 x 1.57"], panel cut-out 50 x 25 mm [1.97 x 0.98"]
- Front bezel for clip mounting (T008180) 53 x 28 mm [2.09 x 1.10"], panel cut-out 50 x 25 mm [1.97 x 0.98"]
- Gasket
- Instruction manual, multilingual

1) Stock types

© Fritz Kübler GmbH, subject to errors and changes. 03/2023

LED dual function displays | Universal with dual functions, 4 combinations (DC) | Codix 52U

Accessories / Mounting examples

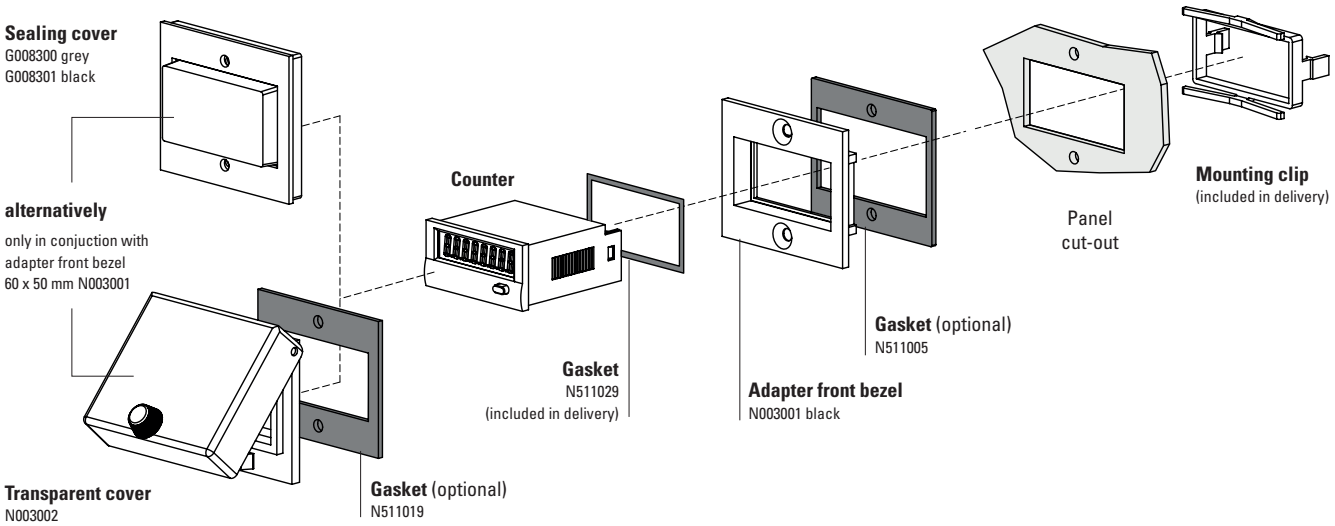

		Type / size	Description		Order no.	suitable gasket
Adapter front bezel		**53 x 28 mm [2.09 x 1.10“]**	for cut-out 50 x 25 mm [1.97 x 0.98“] to cut-out 45 x 22.2 mm [1.77 x 0.94“]	grey black anthracite	**T008164** **T008165** **T008180**	**N511015**
		**56 x 40 mm [2.20 x 1.57“]**	for cut-out 50 x 25 mm [1.97 x 0.98“] to cut-out 45 x 22.2 mm [1.77 x 0.94“] screw mounting	black anthracite	**T008161** **T008181**	**N511045**
		**72 x 36 mm [2.83 x 1.42“]**	for cut-out 68 x 33 mm [2.68 x 1.30“] to cut-out 45 x 22.2 mm [1.77 x 0.94“]	black and silver anodised as set	**162704Set**	–
		**60 x 50 mm [2.36 x 1.97“]**	for cut-out 54 x 29 mm [2.13 x 1.14“] to cut-out 45 x 22.2 mm [1.77 x 0.94“] screw mounting	black	**N003001**	**N511005**
		**48 x 48 mm [1.89 x 1.89“]**	for cut-out 45 x 45 mm [1.77 x 1.77“] to cut-out 45 x 22.2 mm [1.77 x 0.94“]	black	**T008883**	–
Sealing cover IP65		**K1**	only in conjuction with adapter front bezel 60 x 50 mm N003001	transparent / grey transparent / black	**G008300** **G008301**	–
Transparent cover IP65		**1 Dv** (mounted on bezel)	cover lockable, for cut-out 54 x 29 mm [2.13 x 1.14“], only in conjuction with adapter front bezel 60 x 50 mm N003001	transparent / black	**N003002**	**N511019**
Gasket counter			48 x 24 mm (for installation in adapter front bezel) 49 x 25 mm		**N511029** **N511034**	
Mounting frame		**cut-out 50 x 25 mm [1.97 x 0.98“]**	via adapter T008180 for snap-on mounting on 35 mm [1.38“] top-hat DIN rail	chromated	**G300004**	–
Enclosure blind		**48 x 24 mm [1.89 x 0.94“]**	for cut-out 45 x 22.2 mm [1.77 x 0.94“] and cut-out 50 x 25 mm [1.97 x 0.98“]	anthracite	**G003836**	–

incl. in delivery

© Fritz Kübler GmbH, subject to errors and changes. 03/2023

LED dual function displays | Universal with dual functions, 4 combinations (DC) | Codix 52U

Technical data

General technical data

Display		6 digits, red 7 segment LED display; 8 mm [0.32"] high
Data backup		EEPROM
Operating temperature	10 ... 26 V DC	-20 °C ... +65 °C [-4 °F ... +149 °F]
	> 26 ... 30 V DC	-20 °C ... +55 °C [-4 °F ... +131 °F] (non-condensing)
Storage temperature		-25 °C ... +70 °C [-13 °F ... +158 °F]

Electrical characteristics

Supply voltage	10 ... 30 V DC, with integrated reverse polarity protection
Current consumption	max. 40 mA

Mechanical characteristics

Housing	front panel mount 48 x 24 mm [1.89 x 0.94"] acc. to DIN 43700; RAL 7021, dark grey
Protection	IP65 (front side)
Weight	approx. 50 g [1.76 oz]
Vibration resistance acc. to EN 60068-2-6	10 ... 55 Hz / 1 mm [0.04"] / 30 min
Shock resistance acc. to EN 60068-2-27	100 G: 2 ms 10 G: 6 ms

Inputs

Polarity of inputs		programmable, NPN or PN
Input resistance		approx. 5 kΩ
Counting frequency [1]		max. 60 kHz, can be damped to 30 Hz
Display range	timer	0.001 s ... 999999 h
	frequency meter	1/min or 1/sec
Minimum pulse duration of the reset input		5 ms
Input switching level (HTL)		
	LOW	0 ... 0.2 x U_B [V DC]
	HIGH	0.6 x U_B ... 30 V DC
Input switching level at 4 ... 30 V DC		
	LOW	0 ... 2 V DC
	HIGH	4 ... 30 V DC
Accuracy		< 0.1 % frequency meter, tachometer

Approvals

UL compliant in accordance with	File no. E128604
CE compliant in accordance with	
EMC Directive	2014/30/EU
RoHS Directive	2011/65/EU
UKCA compliant in accordance with	
EMC Regulations	S.I. 2016/1091
RoHS Regulations	S.I. 2012/3032

Applications for dual functions

- Pulse and frequency (speed)
  e.g. production data acquisition: total piece count and speed on OEM equipment, flow rate measuring systems – total flow and current flow
- 2 pulse counters
  Measurement of batch and total piece count or of daily production count and total count values
- Pulse and time (maintenance counter)
  Used in the lift industry as trip counters and hours-run meters and on production machines for piece and time counting, flow and time measurement, materials handling time and quantities
- 2 timers
  Measurement of total time and orderspecific times, maintenance intervals and total time, time of day and total time

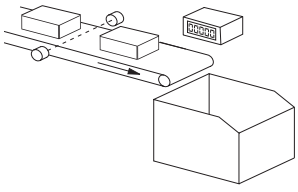

Piece count on conveyor and production speed

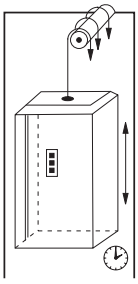

Trip counter and hours-run

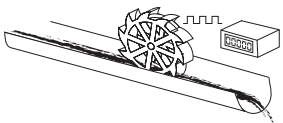

Flow rate and total volume

1) Details see manual

© Fritz Kübler GmbH, subject to errors and changes. 03/2023

LED dual function displays | Universal with dual functions, 4 combinations (DC) | Codix 52U

Block diagram

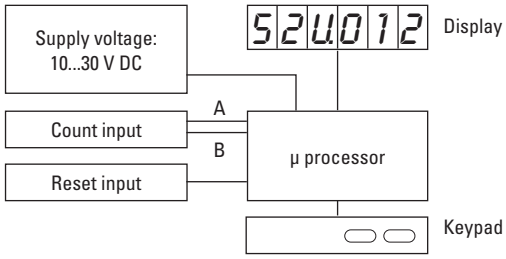

Terminal assignment



PIN	DC version
1	10 ... 30 V DC
2	0 V GND
3	INP A
4	INP B
5	Reset

Function of the inputs INP A, INP B

Counter with 2 totalizing ranges:
INP A: Dynamic count input counter 1 and counter 2
INP B: Inactive

Totalizer and timer:
INP A: Dynamic count input for totalizer
INP B: Start/Stop or gate input for timer

Totalizer and frequency meter:
INP A: Dynamic count input/frequency input
INP B: Inactive

Timer with 2 time ranges:
INP A: Start input (depends on input type)
INP B: Start/Stop or gate input for timer (depends on input type)

Dimensions

Dimensions in mm [inch]

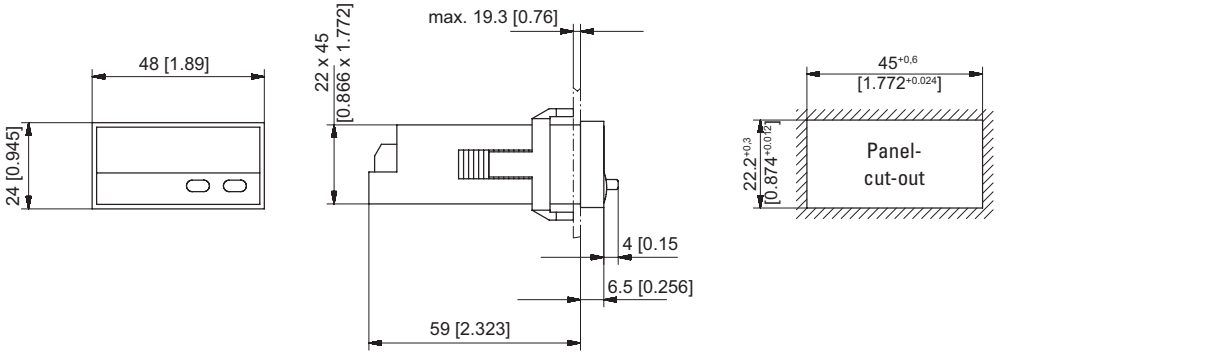

Front bezel for clip mounting (included in delivery)

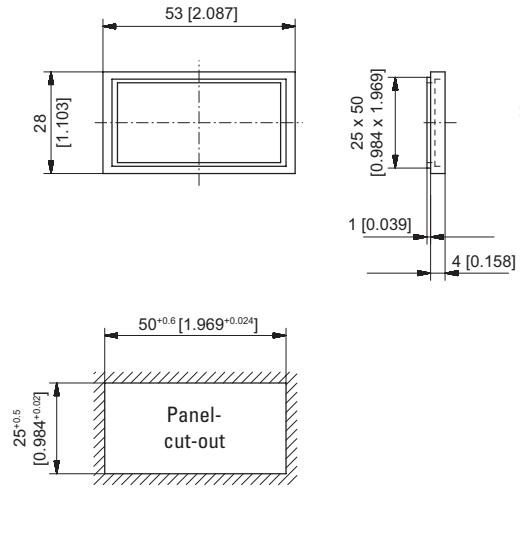

Front bezel for screw mounting (included in delivery)

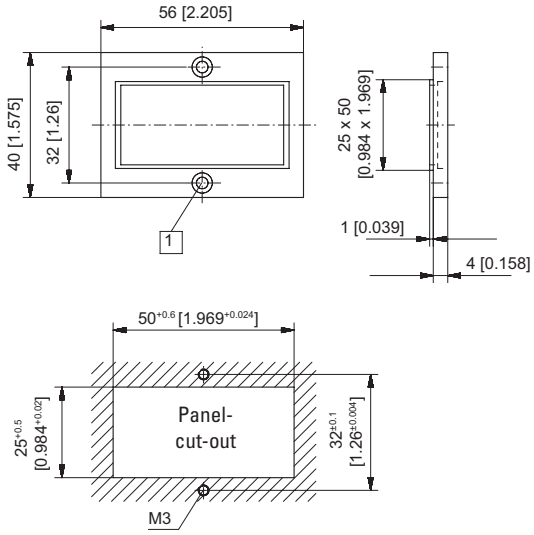

1 Countersinking Af3, DIN 74

© Fritz Kübler GmbH, subject to errors and changes. 03/2023