Brand of NTN corporation

Technical data

UCP324

Bearing units



Grey cast housing, radial insert ball bearing with socket set screws,seal with slinger

KIT CONTENT

UC.324.G2, P324

VISUAL (S)

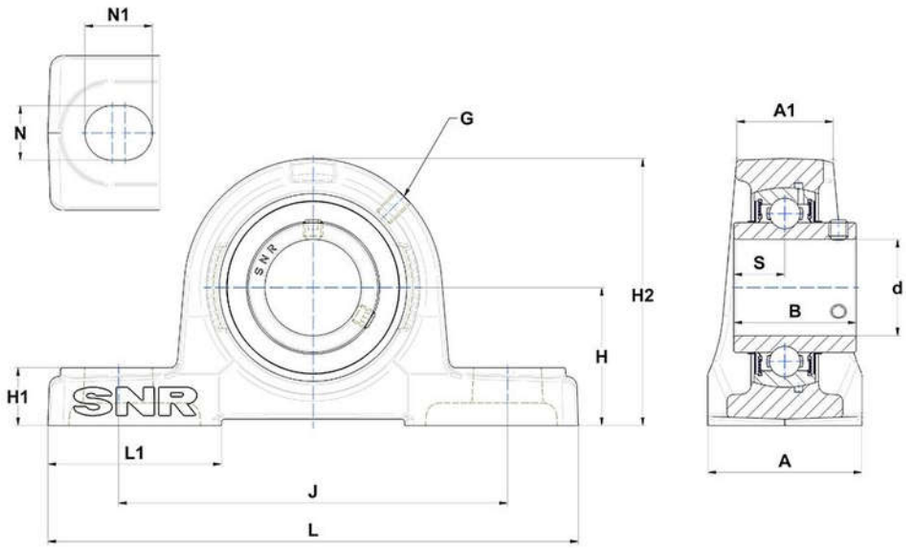

PRODUCT DEFINITION

Brand	SNR
A - Housing width	140 mm
A1 - Housing top width	88 mm
B - Width of Inner Ring	126 mm
d - Shaft diameter	120 mm
G - Grease fitting	M10x1

PRODUCT DEFINITION	
H - Distance mounting base to centerline spheric. seating diam.	160 mm
H1 - Housing foot height	65 mm
H2 - Housing height	320 mm
J - Mounting holes distance	450 mm
L - Housing length	570 mm
L1 - Housing foot length	140 mm
N - Mounting hole dimension	40 mm
N1 - Mounting hole length	55 mm
S - Distance front side/bearing centre	51 mm

PRODUCT PERFORMANCE	
C - Dynamic load rating	228000000 mN
C0 - Static load rating	208000000 mN
Operating temperature min.	253,15 °K
Operating temperature max.	373,15 °K

OTHER FEATURES	
Mass	58,5 kg
Recommended tightening torque for set screw	75 N-m