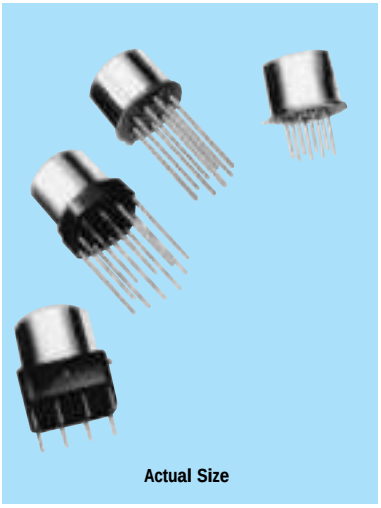

Actual Size

TELEDYNE RELAYS

ESTABLISHED RELIABILITY TO-5 RELAYS

DPDT

SERIES 412

T²R®

SERIES DESIGNATION	RELAY TYPE
412	**DPDT basic relay**
412D	**DPDT relay with internal diode for coil transient suppression**
412DD	**DPDT relay with internal diodes for coil transient suppression and polarity reversal protection**
412T	**DPDT relay with internal transistor driver and coil transient suppression diode**

INTERNAL CONSTRUCTION

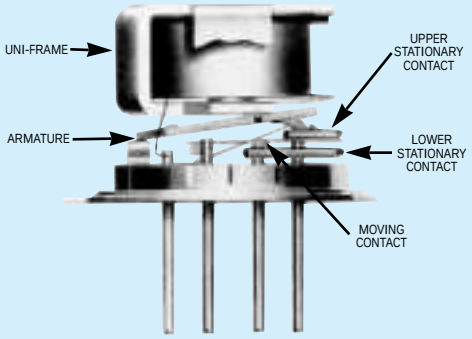

ENVIRONMENTAL AND PHYSICAL SPECIFICATIONS	
Temperature (Ambient)	-65°C to +125°C
Vibration	30 g's to 3000 Hz (Note 1)
Shock	75 g's for 6 msec. (Note 1) half-sine
Acceleration	50 g's (Note 1)
Enclosure	All welded, hermetically sealed
Weight	0.09 oz (2.55 gms.) max.

DESCRIPTION

The TO-5 relay, originally conceived and developed by Teledyne, has become one of the industry standards for low level switching from dry circuit to 1 ampere. Designed expressly for high density PC Board mounting, its small size and low coil power dissipation make the TO-5 relay one of the most versatile ultraminiature relays available.

The following unique construction features and manufacturing techniques provide excellent resistance to environmental extremes and overall high reliability.

- All welded construction.
- Unique uni-frame design providing high magnetic efficiency and mechanical rigidity.
- High force/mass ratios for resistance to shock and vibration.
- Advanced cleaning techniques provide maximum assurance of internal cleanliness.
- Precious metal alloy contact material with gold plating assures excellent high current and dry circuit switching capabilities.

The 412D and 412DD Series utilizes internal discrete silicon diodes for coil suppression and polarity reversal protection. The hybrid 412T features an internal silicon suppression diode and transistor driver. This hybrid package reduces PC board floor space by reducing the number of external components needed to drive the relay.

By virtue of its inherently low intercontact capacitance and contact circuit losses, the TO-5 relay has shown itself to be an excellent ultraminiature RF switch for frequency ranges well into the UHF spectrum. A typical RF application for the TO-5 relay is in hand held radio transceivers, wherein the combined features of good RF performance, small size, low coil power dissipation and high reliability make it a preferred method of T-R switching (see Figure 1).

GENERAL ELECTRICAL SPECIFICATIONS (-65°C to +125°C unless otherwise noted) (Notes 2 & 8)

Contact Arrangement	2 Form C (DPDT)		
Rated Duty	Continuous		
Contact Resistance	0.1 ohm max. before life; 0.2 ohm max. after life at 1A/28VDC, (measured 1/8" from header)		
Contact Load Ratings (DC) (See Fig. 2 for other DC resistive voltage/current ratings)	Resistive: 1 Amp/28VDC Inductive: 200 mA/28VDC (320 mH) Lamp: 100 mA/28VDC Low Level: 10 to 50 µA/10 to 50 mV		
Contact Load Ratings (AC)	Resistive: 250 mA/115VAC, 60 and 400Hz (Case not grounded) 100 mA/115VAC, 60 and 400Hz (Case grounded)		
Contact Life Ratings	10,000,000 cycles (typical) at low level 1,000,000 cycles (typical) at 0.5A/28VDC resistive 100,000 cycles min. at all other loads specified above		
Contact Overload Rating	2A/28VDC Resistive (100 cycles min.)		
Contact Carry Rating	Contact factory		
Coil Operating Power	450 milliwatts typical at nominal rated voltage at 25°C		
Operate Time	2.0 msec max. at nominal rated coil voltage		
Release Time	412 Series: 1.5 msec max.	412D, 412DD Series: 4.0 msec max.	412T: 7.5 msec max.
Contact Bounce	1.5 msec max.		
Intercontact Capacitance	0.4 pf typical		
Insulation Resistance	10,000 megohms min. between mutually isolated terminals		
Dielectric Strength	Atmospheric pressure: 500 VRMS/60 Hz	70,000 ft.: 125 VRMS/60Hz	

Negative Coil Transient (VDC)	412D, 412DD, 412T	1.0 max.
Diode P.I.V. (VDC)	412D, 412DD, 412T	100 min.
412T Transistor Characteristics	**Base Turn Off Voltage (VDC)**	0.3 max.
	Emitter-base breakdown Voltage (BV_{EBO}) (@25°C) (VDC)	6.0 min.
	Collector-base breakdown Voltage (BV_{CBO}) (@25°C & Ic = 100 µA) (VDC)	75 min.

DETAILED ELECTRICAL SPECIFICATIONS (-65°C to +125°C unless otherwise noted) (Note 8)

BASE PART NUMBERS (See Note 11 for full P/N Example)			**412-5 412D-5 412DD-5 412T-5**	**412-6 412D-6 412DD-6 412T-6**	**412-9 412D-9 412DD-9 412T-9**	**412-12 412D-12 412DD-12 412T-12**	**412-18 412D-18 412DD-18 412T-18**	**412-26 412D-26 412DD-26 412T-26**
Coil Voltage (VDC)	Nom.		5.0	6.0	9.0	12.0	18.0	26.5
	Max.		5.8	8.0	12.0	16.0	24.0	32.0
Coil Resistance (Ohms ±10% @ 25°C)	412, 412D, 412T (Note 3)		50	98	220	390	880	1560
	412DD (Note 3)		39	78	220	390	880	1560
Coil Current (mADC @ 25°C) (412DD Series)		Min.	93.2	58.3	33.0	25.6	17.5	14.8
		Max.	128.2	78.3	42.9	32.8	22.1	18.5
Coil Current (mADC @ 25°C) (412T Series)	(Note 7)	Min.	82.2	52.9	35.3	26.6	17.9	14.7
		Max.	112.1	69.9	47.4	35.8	24.0	19.8
Pick-up Voltage (VDC, Max.)	412, 412D		3.5	4.5	6.8	9.0	13.5	18.0
	412DD		3.9	5.2	7.8	10.0	14.5	19.0
	412T (Note 7)		3.5	4.5	6.8	9.0	13.5	18.0
Base Current to Turn On (mADC, Max.) (412T Series) (Note 7)			3.00	2.04	1.36	1.03	0.68	0.50
Drop-out Voltage (VDC)	412, 412D, 412T (Note 7)	Min.	0.14	0.18	0.35	0.41	0.59	0.89
		Max.	2.3	3.2	4.9	6.5	10.0	13.0
	412DD	Min.	0.6	0.7	0.8	0.9	1.1	1.4
		Max.	2.8	3.4	5.3	6.5	10.0	13.0

PERFORMANCE CURVES (NOTE 2)

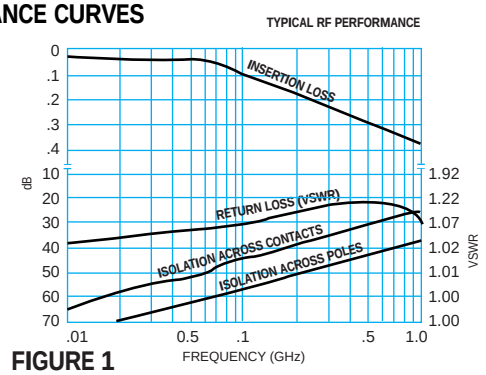

FIGURE 1

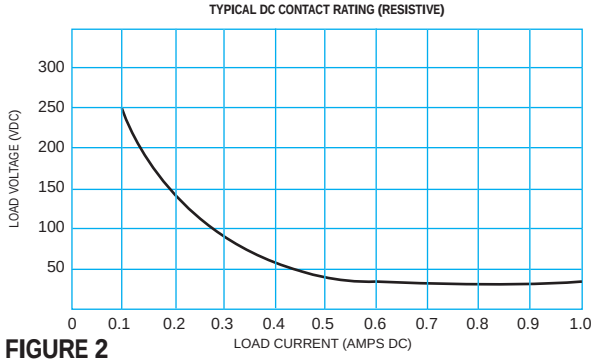

FIGURE 2

OUTLINE DIMENSIONS

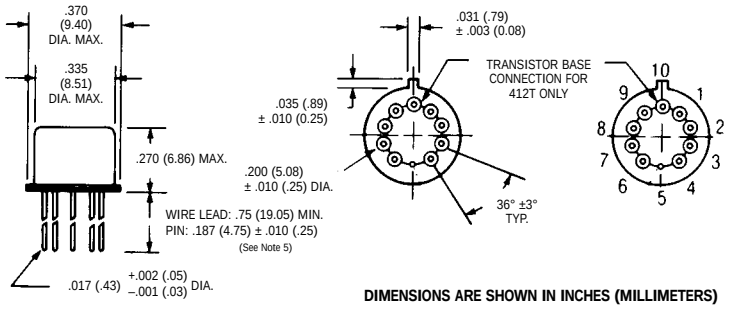

TERMINAL LOCATIONS AND PIN NUMBERING (REF. ONLY)
(Viewed from Terminals)

DIMENSIONS ARE SHOWN IN INCHES (MILLIMETERS)

SCHEMATIC DIAGRAMS

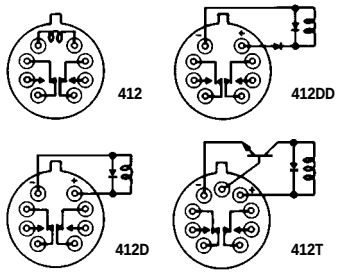

SCHEMATICS ARE VIEWED FROM TERMINALS

SPACER PAD

Relays can be supplied with a spacer pad attached to the relay header. The pad permits the relay to be spaced away from the mounting surface facilitating solder joint inspection. To order add **M4** to the part number (e.g. ER412**M4**-26).

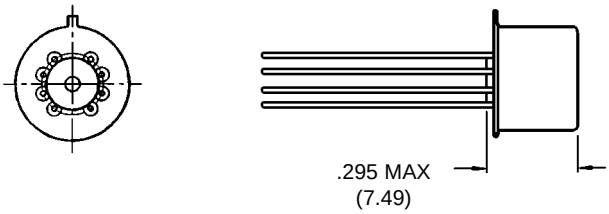

NOTES:

1. Material: Polyester film.
2. Increase contact resistance by 0.01 ohm.

TYPICAL TTL INTERFACE CIRCUIT (See Note 9)

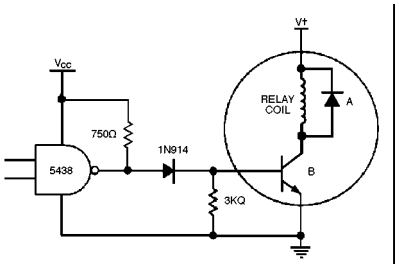

(A) Internal Suppression Diode
(B) Internal Driver Transistor

NOTES:

1. Relays contacts will exhibit no chatter in excess of 10 µsec or transfer in excess of 1 µsec.
2. "Typical" characteristics are based on available data and are best estimates. No on-going verification tests are performed.
3. For reference only. Coil resistance not directly measurable at relays terminals due to internal series semiconductor. 412DD and 412T only.
4. Screened HI-REL versions available. Contact factory.
5. Unless otherwise specified, relays will be supplied with leads as follows: Length will be standard 0.75" (19.05) minimum and will be either gold plated or solder coated. Contact your local representative for ordering information.
6. The slash and characters appearing after the slash are not marked on the relay.
7. Limit Base Emitter current to 15 mADC.
8. Unless otherwise specified, parameters are initial values.
9. Circuit is typical for all 412T Series. Values shown are for the 5 volt series and apply over the full operating temperature range.
10.

RELIABILITY LEVEL	FAILURE RATE %/10,000 CYCLES
A	1.5
B	0.75

11.

Teledyne Part Numbering System for Established Reliability Relays (See $T^2R^®$ Program Introduction)

EXAMPLE: ER 412 D Z M4 – 26 A / SQ

- ER — Established Reliability Designator
- 412 — Relay Series
- D — D = Diode Suppression; DD = Diode Suppression and Polarity Protection; T = Transistor Driver
- Z M4 — Mounting Variant: Ground Pin (See page 112); M4 = Spacer Pad
- 26 — Coil Voltage
- A — Reliability and Screening Level (Note 10)
- SQ — Termination Variant: Q = Solder Coated Leads (Notes 5 and 6); S = .187" Leads (Notes 5 and 6)

12. Some relays are shown with spreader pads. Contact your local representative.

©1996
TELEDYNE RELAYS
12525 Daphne Avenue
Hawthorne, California 90250