Bell Mounts - Type CFBMH



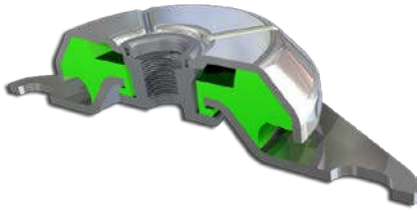

Applications

- Gensets
- Engines
- Toolroom Machinery
- Pumps
- Special Equipment
- HVAC
- Pumps

The CFBMH range of mounts offer a high level of insulation - especially useful on Generators, Engines etc. with an operating frequency of around 25 Hz (1500 RPM).

Axial stresses are perfectly absorbed and side deflections are limited to guarantee good stability.

These Bell Mounts are designed with a fail-safe function making it an ideal solution for applications where safety is paramount.

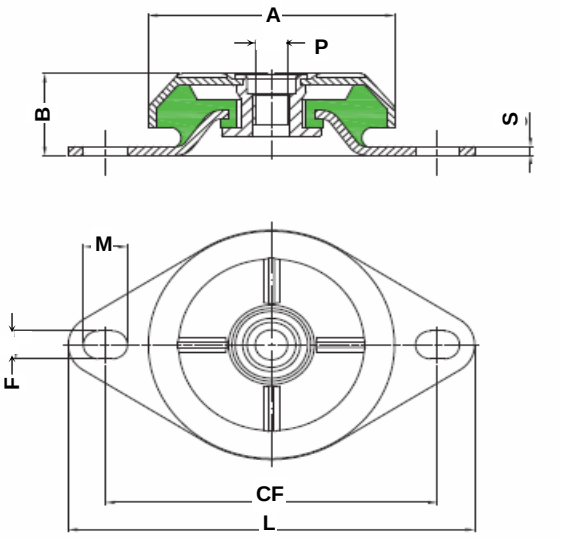

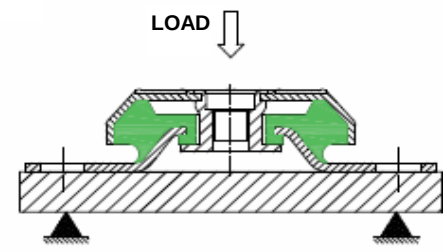

RS Ref:	Fibet Ref:	Hardness (IRHD)	A (mm)	B (mm)	P (mm)	FxM (mm)	CF (mm)	L (mm)	S (mm)	Average Stiffness (daN/mm)	Maximum Load (daN)	Maximum Deflection (mm)
720-3515	CFBMH783010W	45	78	30	M10	9x12	110	135	2.5	47.0	108.0	2.3
720-3518	CFBMH783010M	60	78	30	M10	9x12	110	135	2.5	116.0	267.0	2.3
201-2334	CFBMH783012W	45	78	30	M12	9x12	110	135	2.5	47.0	108.0	2.3
201-2335	CFBMH783012M	60	78	30	M12	9x12	110	135	2.5	116.0	267.0	2.3
201-2337	CFBMH923510W	45	92	35	M12	10x15	123.5	150	3	50.0	175.0	3.5
201-2338	CFBMH923510M	60	92	35	M12	10x15	123.5	150	3	90.0	315.0	3.5
720-3512	CFBMH923512W	45	92	35	M12	10x15	123.5	150	3	50.0	175.0	3.5
720-3521	CFBMH923512M	60	92	35	M12	10x15	123.5	150	3	90.0	315.0	3.5
720-3524	CFBMH1063816W	45	106	38	M16	13x19	143	175	4	70.0	252.0	3.6
720-3528	CFBMH1063816M	60	106	38	M16	13x19	143	175	4	150.0	450.0	3.0
720-3537	CFBMH1444816W	45	144	48	M16	14.5x18	182	215	5	100.0	700.0	7.0
720-3530	CFBMH1444816M	60	144	48	M16	14.5x18	182	215	5	200.0	1340.0	6.7