

Read/write station

IQT1-FP-IO-V1

- Operating frequency 13.56 MHz
- IO-link interface
- Conforms to ISO 15693
- Suitable for FRAM transponder
- LEDs as function indicators
- Connection via V1 (M12 x 1) plug connection
- Degree of protection IP67
- For connection to IO-Link master

HF read/write station with IO-Link in accordance with ISO 15693

Dimensions

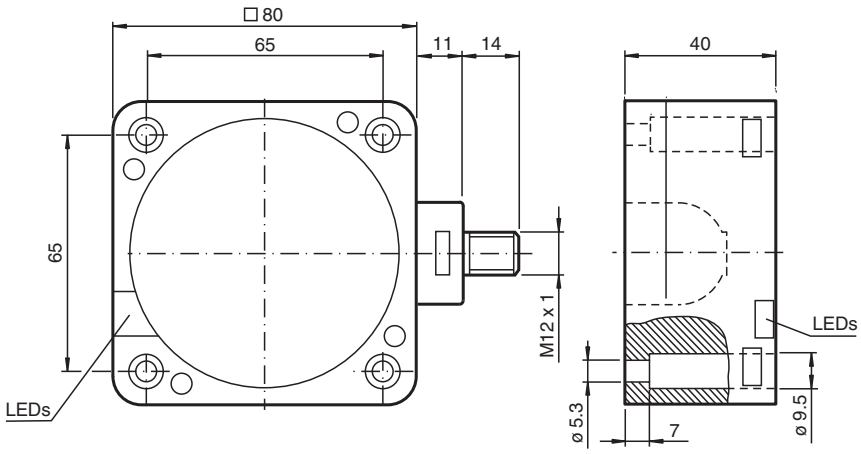

Technical Data

General specifications	
Operating frequency	13.56 MHz
Transfer rate	26 kBit/s
Sensing range	
Read distance	0 ... 130 mm
Write distance	0 ... 130 mm
Width	max. 100 mm
UL File Number	E87056
Functional safety related parameters	
$MTTF_d$	280 a
Mission Time (T_M)	10 a
Diagnostic Coverage (DC)	0 %
Indicators/operating means	
LED red/green	Green: power on Flashing green: IO-Link communication Flashing red/green: IO-Link communication interrupted

Release date: 2020-03-24 Date of issue: 2020-03-27 Filename: 299929_eng.pdf

Technical Data

LED blue/yellow		Blue: Write/read attempt performed Yellow: Read/write tag detected
Electrical specifications		
Rated operating voltage	U_e	20 ... 30 V DC , ripple 10 $\%_{SS}$
Power consumption	P_0	≤ 2 W
Interface		
Interface type		IO-Link
Protocol		IO-Link V1.1
Cycle time		min. 4 ms
Mode		COM 3 (230.4 kBaud)
Process data width		32 Byte
SIO mode support		no
Directive conformity		
Radio equipment		
Directive 2014/53/EU		EN 301489-1 EN 301489-3 EN 300330 EN 62368-1 EN 50364
RoHS		
Directive 2011/65/EU (RoHS)		EN 50581
Standard conformity		
Degree of protection		EN 60529
Communication interface		EN 61131-9
RFID		ISO/IEC 15693-2 ISO/IEC 15693-3 ISO/IEC 18000-3
Approvals and certificates		
UL approval		cULus Listed, Class 2 Power Source, Type 1 enclosure
FCC approval		This device complies with part 15 of the FCC rules. Operation is subject to the following two conditions: (1) This device may not cause harmful interference, and (2) This device must accept any interference received, including interference that may cause undesired operation. **Caution:** Changes or modifications not expressly approved by the party responsible for compliance could void the user's authority to operate the equipment.
IC approval		This device complies with Industry Canada licence-exempt RSS standard(s) and with part 15 of the FCC Rules. Operation is subject to the following two conditions: (1) this device may not cause interference, and (2) this device must accept any interference, including interference that may cause undesired operation of the device. Le présent appareil est conforme aux CNR d'Industrie Canada applicables aux appareils radio exempts de licence. L'exploitation est autorisée aux deux conditions suivantes : (1) l'appareil ne doit pas produire de brouillage, et (2) l'utilisateur de l'appareil doit accepter tout brouillage radioélectrique subi, même si le brouillage est susceptible d'en compromettre le fonctionnement.
Radio approval		USA: FCC IREIQT1FPIO Canada: 7037A-IQT1FPIO
Ambient conditions		
Ambient temperature		-25 ... 70 °C (-13 ... 158 °F)
Storage temperature		-40 ... 85 °C (-40 ... 185 °F)
Mechanical specifications		
Degree of protection		IP67
Connection		connector M12 x 1
Material		
Housing		PBT
Base		diecast aluminum
Encapsulation compound		CY 221/HY 2966
Installation		
Distance between two heads		≥ 150 mm

Release date: 2020-03-24 Date of issue: 2020-03-27 Filename: 299929_eng.pdf

Technical Data

Mass	approx. 380 g

Connection

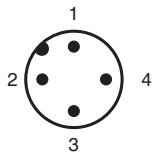

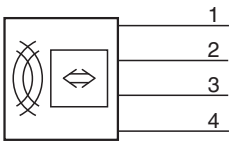

\+
n.c.
-
C/Q

Accessories

	**ICE1-8IOL-G60L-V1D**	Ethernet IO-Link module with 8 inputs/outputs
	**IO-Link-Master02-USB**	IO-Link master, supply via USB port or separate power supply, LED indicators, M12 plug for sensor connection
	**V1-G-0,3M-PVC-V1-G**	Connecting cable, M12 to M12, PVC cable 4-pin
	**V1-G-5M-PVC-V1-G**	Connecting cable, M12 to M12, PVC cable 4-pin
	**V1-G-10M-PVC-V1-G**	Connecting cable, M12 to M12, PVC cable 4-pin
	**IQC21-16 50pcs**	Data carrier
	**IQC21-30 25pcs**	Data carrier
	**IQC21-50F-T10**	Data carrier
	**IQC21-58**	Data carrier
	**IQC22-22-T9 50pcs**	Data carrier
	**IQC33-20 50pcs**	Data carrier
	**IQC33-30 25pcs**	Data carrier
	**IQC33-50 25pcs**	Data carrier

Release date: 2020-03-24 Date of issue: 2020-03-27 Filename: 299929_eng.pdf

Safety Information

This equipment has been tested and found to comply with the limits for a Class A digital device, pursuant to part 15 of the FCC Rules. These limits are designed to provide reasonable protection against harmful interference when the equipment is operated in a commercial environment. This equipment generates, uses, and can radiate radio frequency energy and, if not installed and used in accordance with the instruction manual, may cause harmful interference to radio communications. Operation of this equipment in a residential area is likely to cause harmful interference in which case the user will be required to correct the interference at his own expense.

Release date: 2020-03-24 Date of issue: 2020-03-27 Filename: 299929_eng.pdf