Inductive sensor
BI8U-M18-AP6X-H1141

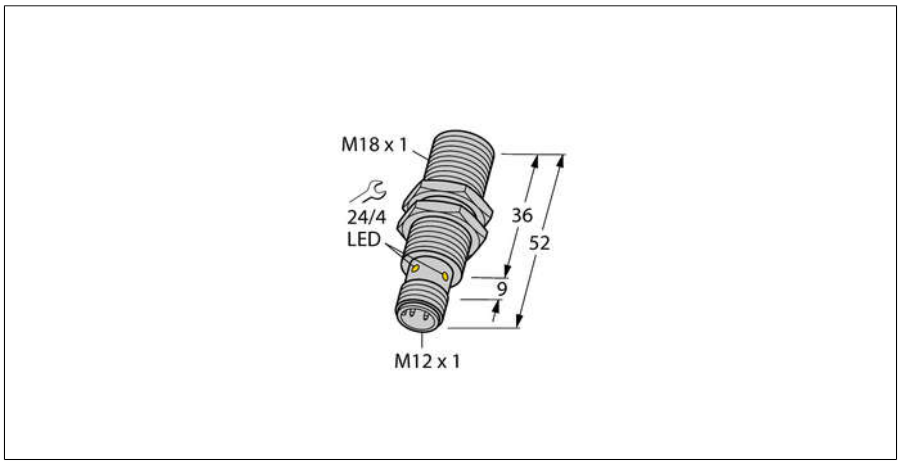

- **Threaded barrel, M18 x 1**
- **Chrome-plated brass**
- **Factor 1 for all metals**
- **Protection class IP68**
- **Resistant to magnetic fields**
- **Large switching distance**
- **Recessed mountable**
- **DC 3-wire, 10…30 VDC**
- **NO contact, PNP output**
- **M12 x 1 male connector**

Wiring Diagram

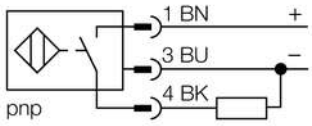

Type code	BI8U-M18-AP6X-H1141
Ident no.	1644731
Rated switching distance Sn	8 mm
Mounting conditions	flush
Assured switching distance	≤ (0,81 x Sn) mm
Repeatability	≤ 2 % of full scale
Temperature drift	≤ ± 10 %
	≤ ± 15 %, ≤ -25 °C v ≥ +70 °C
Hysteresis	3…15 %
Ambient temperature	-30…+85 °C
Operating voltage	10… 30VDC
Residual ripple	≤ 10 % U_{ss}
DC rated operational current	≤ 200 mA
No-load current I_0	≤ 20 mA
Residual current	≤ 0.1 mA
Rated insulation voltage	≤ 0.5 kV
Short-circuit protection	yes/ cyclic
Voltage drop at I_e	≤ 1.8 V
Wire breakage / Reverse polarity protection	yes/ complete
Output function	3-wire, NO contact, PNP
Protective insulation	⧈
Switching frequency	1.5 kHz
Construction	threaded barrel, M18 x 1
Dimensions	52 mm
Housing material	Metal, CuZn, chrome-plated
Active area material	Plastic, LCP
Max. tightening torque housing nut	25 Nm
Connection	flange connector, M12 x 1
Vibration resistance	55 Hz (1 mm)
Shock resistance	30 g (11 ms)
Protection class	IP68
MTTF	874 years acc. to SN 29500 (Ed. 99) 40 °C
Switching state	LED yellow

Functional principle

Inductive sensors detect metal objects contactless and wear-free. Due to the patented multi-coil system, *uprox*®+ sensors have distinct advantages over conventional sensors. They excel in largest switching distances, maximum flexibility and operational reliability as well as efficient standardization.

Edition • 2016-02-12T12:05:45+01:00

Distance D	36 mm
Distance W	3 x Sn
Distance T	3 x B
Distance S	1.5 x B
Distance G	6 x Sn

Diameter of the active area B	Ø 18 mm

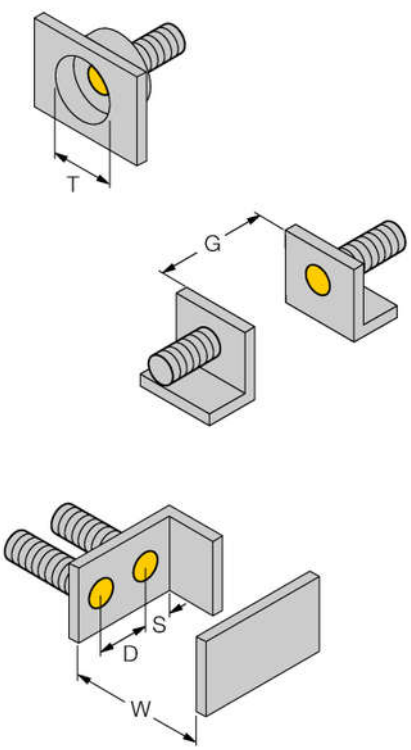

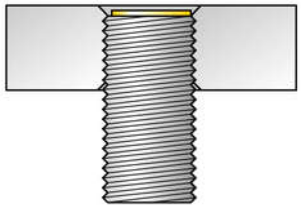

All flush mountable *uprox*®+ threaded barrel types are also recessed mountable. Safe operation is ensured if the sensor is screwed in by half a turn.

Edition • 2016-02-12T12:05:45+01:00

Accessories

Type code	Ident no.	Description	Design
PN-M18	6905310	Protective nut for M18 x 1 threaded barrels; material: Stainless steel A2 1.4305 (AISI 303)	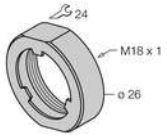
BST-18B	6947214	Fixing clamp for threaded barrel devices, with dead-stop; material: PA6	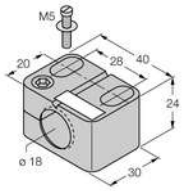
QM-18	6945102	Quick-mount bracket with dead-stop; material: Chrome-plated brass Male thread M24 x 1.5. Note: The switching distance of proximity switches can be reduced by the use of quick-mount brackets.	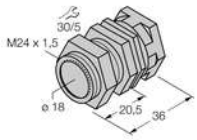
MW-18	6945004	Mounting bracket for threaded barrel devices; material: Stainless steel A2 1.4301 (AISI 304)	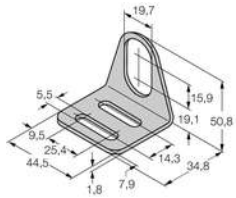
BSS-18	6901320	Mounting bracket for smooth and threaded barrel devices; material: Polypropylene	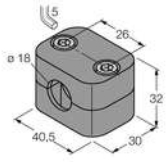

Edition • 2016-02-12T12:05:45+01:00

Wiring accessories

Type code	Ident no.	Description	Design
RKC4T-2/TEL	6625010	Connection cable, female M12, straight, 3-pin, cable length: 2 m, sheath material: PVC, black; cULus approval; other cable lengths and qualities available, see www.turck.com	

Edition • 2016-02-12T12:05:45+01:00