

P1 Flush Pull

Low profile · Lift or pull · Single hole mount

- **Easy installation**
- **Deep pocket**

Material and Finish

Pull and cup: ABS plastic, black
Screws: Steel, zinc plated

Performance Details

Max. static load:
Lifting / pulling: 1300 N (300 lbf)



Pushing / sliding: 450 N (100 lbf)

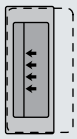

Flammability rating:
UL94-HB or UL94-V0

Operating temperature range:
-50°C (-60°F) to 60°C (140°F)

Installation Notes

Mounting screws supplied.
Door thickness less than the minimum for each range allows some movement of the pull.
Max. torque for mounting screws is 0.5 N•m (5 in•lbf)

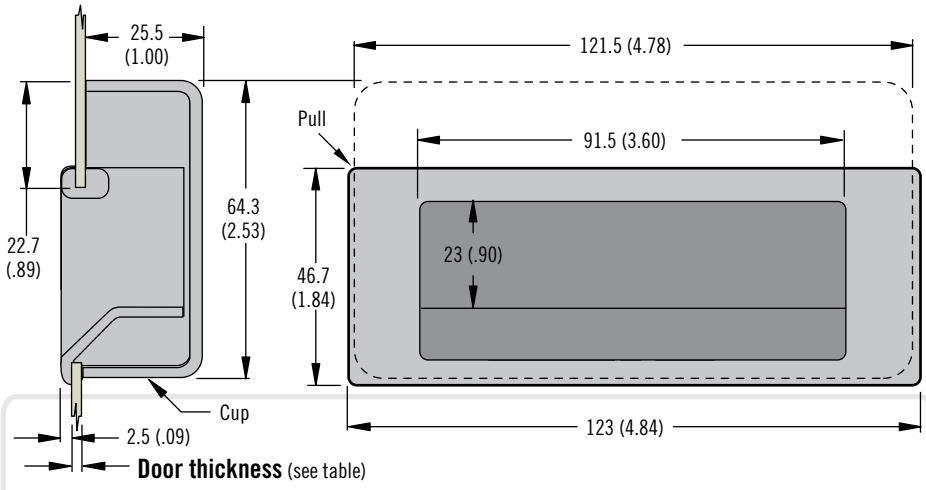

ACTUAL SIZE

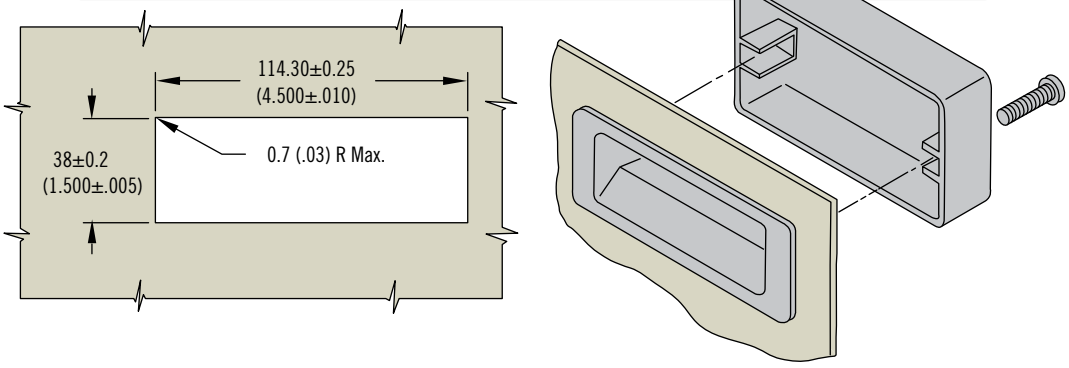

Part Number

See table

Door Thickness Range		Part Number	
Min.	Max.	UL94-HB	UL94-V0
1.0 (.040)	1.8 (.070)	P1-30-101-11	P1-31
1.8 (.070)	3.3 (.130)	P1-30-103-11	P1-33
3.3 (.130)	4.8 (.190)	P1-30-105-11	P1-35
4.8 (.190)	6.3 (.250)	P1-30-107-11	P1-37