# TECHNICAL DATASHEET

## Absolute Encoder AC 36 - BiSS / SSI



- Overall length: 36 mm
- For equipment engineering and industry
- Up to 17 Bit Resolution Singleturn + 12 Bit Multiturn
- Solid shaft 6 mm (Hollow shaft version: AD 36)
- +100°C operating temperature
- 10,000 rpm (continuous)
- Optical encoder with a true geared multiturn
- BiSS or SSI interface
- Option Sinewave 1 Vpp
- Bandwidth 500 kHz

### APPLICATIONS

The AC 36 is an absolute optical encoder with a true geared multiturn, optical sensing technology and 36 mm diameter. Equiped with a solid-shaft the AC 36 is mechanical compatible with all common inkremental encoders. The compact design allows to replace the adequate incremental encoders directly. As a result the technical facilities of absolute encoders can be used for the first time in equipment engineering and also in medical engineering. The mechanical design consists of two ball bearings supported mechanical shaft assembly. The AC 36 complements the **ACURO ® -industry** series with small frame sizes and the same performance as 58 mm versions.

**BiSS-Interface**
Unique within his class the AC 36 provides fully digital position data up to 17 Bit (singleturn) and 12 Bit (multi-turn) over the bidirectional synchronous interface with a variable clock rate up to 10 MHz. This corresponds a singleturn resolution of more than 130 000 mesured steps. Backward compatibility is realized through the SSI interface together with 2048 sine-cosine periods per revolution.

**Integrated diagnostic system**
The AC 36 is based on latest OptoAsic technology with an advanced diagnostic concept. A continous plausibility check controls the internal signal processing for each increment. A code check guarantees that the encoder signal represents bit by bit the mesured rotation. Also the operating temperature of the encoder can be measured, read out and monitored over warn and alarm bits with 8 bit resolution (1°C). Monitoring and controlling of the operating temperature ensures a maximum lifetime of the LED. Eventual failures are indicated early over warn bits.

### TECHNICAL DATA
**mechanical**

| | |
|---|---|
| Housing diameter | 37.5 mm |
| Shaft diameter | 6 mm (Solid shaft) |
| Flange (Mounting of housing) | Pilot flange |
| Protection class shaft input (EN 60529) | IP64 |
| Protection class housing (EN 60529) | IP64 |
| Max. speed | max. 10 000 rpm (continuous), max. 12 000 rpm (short term) |
| Starting torque | ≤ 1 Ncm |
| Moment of inertia | ca. 2.5 x $10^{-6}$ kgm² |

# TECHNICAL DATASHEET

## Absolute Encoder AC 36 - BiSS / SSI

**TECHNICAL DATA**
**mechanical (continued)**

| | |
|---|---|
| Vibration resistance (DIN EN 60068-2-6) | 100 m/s² (10 ... 2000 Hz) |
| Shock resistance (DIN EN 60068-2-27) | 1000 m/s² (6 ms) |
| Operating temperature | -40 °C ... +100 °C |
| Storage temperature | -15 °C ... +85 °C |
| Weight | approx. 80 g (ST) / 130 g (MT) |
| Connection | Cable, axial or radial |

**TECHNICAL DATA**
**electrical**

| | |
|---|---|
| Supply voltage | -5%/ 10% DC 5 V<br>DC 7-30 V |
| Max. current w/o load | 50 mA (ST), 100 mA (MT) |
| Resolution singleturn | 12 -17 Bit |
| Resolution multiturn | 12 Bit |
| Output code | Gray, Binary |
| Drives | Clock and Data / RS422 |
| Incremental signals optional | Sinus-Cosinus 1 Vpp |
| Number of pulses | 2048 |
| 3dB limiting frequency | 500 kHz |
| Absolute accuracy | ±35" |
| Repeatability | ±10" |
| Alarm output | Alarm bit (SSI Option), warning and alarm bit (BiSS) |

**ELECTRICAL CONNECTIONS**
**Cable**

| **Signal** | **Colour cable** |
|---|---|
| 5 / 7-30 V ($U_B$) | white |
| 0 V ($U_N$) | brown |
| Clock | yellow |
| $\overline{\text{Clock}}$ | green |
| Data | pink |
| $\overline{\text{Data}}$ | grey |
| A | white/green [1] |
| $\overline{\text{A}}$ | brown/green [1] |
| B | red/blue [1] |
| $\overline{\text{B}}$ | grey/pink [1] |
| 5 V Sensor | violet [1] |
| 0 V Sensor | black [1] |

[1] only with "SC"

# TECHNICAL DATASHEET

## Absolute Encoder AC 36 - BiSS / SSI

### DIMENSIONED DRAWINGS

**Connection axial**

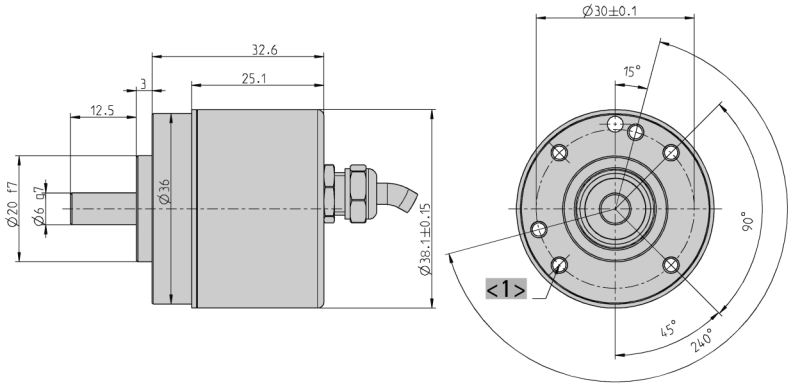


<1> M3 (depth 6)

Dimensions in mm

**Connection radial**

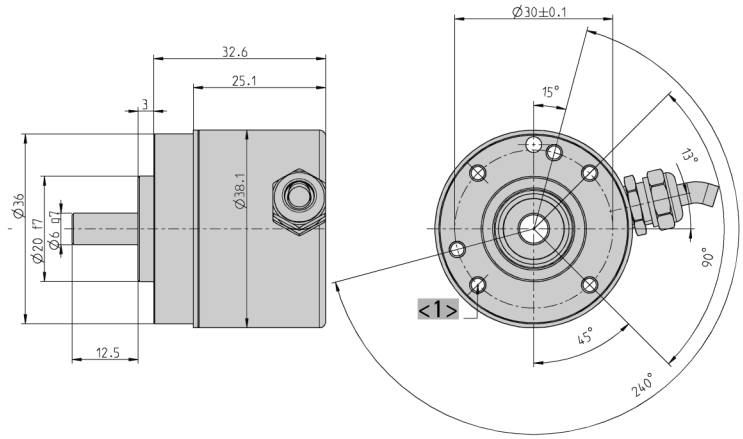


<1> M3 (depth 6)

Dimensions in mm

### ORDERING INFORMATION

| Type | Resolution | Supply voltage | Flange, Protection, Shaft | Interface | Connection |
|---|---|---|---|---|---|
| ☐ | ☐ | ☐ | ☐ | ☐ | ☐ |
| **AC36** | **0012** 12 Bit ST<br>**0013** 13 Bit ST<br>**0014** 14 Bit ST<br>**0017** 17 Bit ST<br>**1213** 12 Bit MT + 13 Bit ST<br>**1217** 12 Bit MT + 17 Bit ST (BiSS) | **A** DC 5 V<br>**E** DC 7 - 30 V | **R.41** Pilot, IP64, 6 mm | **BI** BiSS<br>**SB** SSI binary<br>**SG** SSI Gray<br>**SC** SSI Gray (+SinCos 1Vpp) | **A** Cable, axial<br>**B** Cable, radial |

# TECHNICAL DATASHEET

## Absolute Encoder AC 36 - BiSS / SSI

**ORDERING INFORMATION**
**Selection of cable length**

Versions with cable outlet (connection A, B, E or F) are available with various lengths of cable. To order your desired cable length, please add the respective code to the end of your ordering code. Further cable lengths on request.

| Code | Cable length |
|---|---|
| without code | 1.5 m |
| -D0 | 3 m |
| -F0 | 5 m |
| -K0 | 10 m |
| -P0 | 15 m |
| -U0 | 20 m |
| -V0 | 25 m |

# TECHNICAL DATASHEET

# Absolute Encoder AC 36 - BiSS / SSI
# Accessories

## FLEXIBLE COUPLINGS



Bellows coupling



Disk coupling



Helical coupling



Isolated disk coupling



Plastic coupling

| | | Ordering code |
|---|---|---|
| Bellows coupling | 6 mm / 6 mm | 3 520 068 |
| Disk coupling | 6 mm / 6 mm | 0 070 663 |
| Helical coupling 19/28 | 5 mm / 6 mm | 3 520 035 |
| Helical coupling 19/28 | 6 mm / 6 mm | 0 070 653 |
| Helical coupling 19/28 | 6 mm / 6.35 mm | 3 520 051 |
| Helical coupling 25/32 | 6 mm / 9.53 mm | 3 520 052 |
| Helical coupling 25/32 | 6 mm / 10 mm | 3 520 066 |
| Isolated disk coupling | 6 mm / 6 mm | 3 520 081 |
| Isolated disk coupling | 6 mm / 10 mm | 3 520 082 |
| Plastic coupling | 5 mm / 6 mm | 3 520 033 |
| Plastic coupling | 6 mm / 6 mm | 1 761 026 |

## MEASURING WHEELS

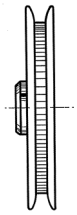

Tread 1

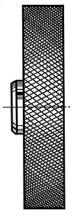

Tread 2 + 3

**Tread 1**
with rim and fine crosshatched knurl
Applications such as threads and yarns

**Tread 2 B**
with glued-on rubber profile B = low-wear rubber surface with good grip (white)
Applications such as paper and cardboard, measuring cables, nongreasy metals, fleece, undressed or surface-treated wood, soft and hard plastics

| Material | Bore diameter (mm) fitting to encoder shaft | Circumference | Tread | Width of bearing surface | Ordering code |
|---|---|---|---|---|---|
| Aluminum | 6 mm | 0.2 m | 1 | 4 mm | 0 601 015 |
| Aluminum | 6 mm | 0.2 m | 2 B | 12 mm | 0 601 048 |

## DISPLAYS

| | Ordering code |
|---|---|
| Position indicator Signo-SSI | 0 727 111 |