IQW200

Inductive sensor

IQ23008BBPKG/K1/SC/2M/PUR

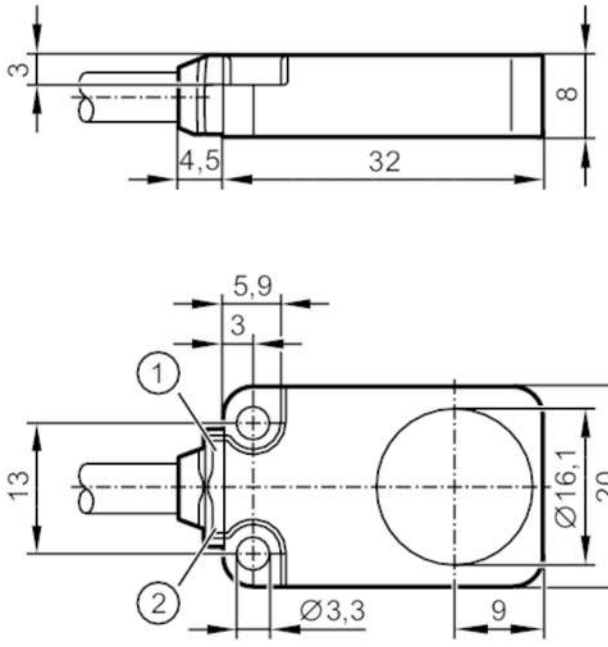

1 LED green
2 LED yellow

Product characteristics		
Electrical design		PNP
Output function		normally open
Sensing range	[mm]	8
Housing		rectangular
Dimensions	[mm]	20 x 8 x 32
Application		
Special feature		Drag chain suitability; Increased sensing range; Magnetic-field immune; anti-spatter
Application		Use in welding applications
Magnetic-field immune		yes
Max. magnetic field immunity	[mT]	300
Electrical data		
Operating voltage	[V]	10...30 DC
Current consumption	[mA]	< 20
Protection class		III
Reverse polarity protection		yes
Outputs		
Electrical design		PNP
Output function		normally open
Max. voltage drop switching output DC	[V]	2.5
Permanent current rating of switching output DC	[mA]	100
Switching frequency DC	[Hz]	2000

IQW200

Inductive sensor

IQ23008BBPKG/K1/SC/2M/PUR

Short-circuit protection			yes
Overload protection			yes
Detection zone			
Sensing range	[mm]		8
Real sensing range Sr	[mm]		8 ± 10 %
Operating distance	[mm]		0...6.48
Increased sensing range			yes
Accuracy / deviations			
Correction factor			steel: 1 / stainless steel: 1 / brass: 1 / aluminium: 1 / copper: 1
Hysteresis	[% of Sr]		3...15
Switch point drift	[% of Sr]		-10...10
Operating conditions			
Ambient temperature	[°C]		-40...85
Protection			IP 65; IP 66; IP 67; IP 68
Tests / approvals			
EMC		EN 61000-4-2 ESD	4 kV CD / 8 kV AD
		EN 61000-4-3 HF radiated	10 V/m
		EN 61000-4-4 Burst	2 kV
		EN 61000-4-6 HF conducted	10 V
		EN 55011	class B
Vibration resistance		EN 60068-2-6 Fc	20 g (10...3000 Hz) / 50 sweep cycles, 1 octave per minute, in 3 axes
Shock resistance		EN 60068-2-27 Ea	100 g 11 ms half-sine; 3 shocks each in every direction of the 3 coordinate axes
Continuous shock resistance		EN 60068-2-27	40 g 6 ms; 4000 shocks each in every direction of the 3 coordinate axes
Fast temperature change		EN 60068-2-14 Na	TA = -40°C; TB = 85°C; t1 = 30 min; t2 = < 10 s 50 cycles
MTTF	[years]		1084
UL approval		Ta	-40...60 °C
		Enclosure type	Type 1
		power supply	Limited Voltage/Current
		UL Approval no.	A021
		File number UL	E174191
Mechanical data			
Weight	[g]		78.9
Housing			rectangular
Mounting			flush mountable
Dimensions	[mm]		20 x 8 x 32
Materials			diecast zinc anti-spatter; sensing face: LCP black; LED window: TPU; potting: PUR
Drag chain suitability			yes
Drag chain suitability		bending radius for flexible use	min. 10 x cable diameter
		bending cycles	> 5 Mio.
Displays / operating elements			
Display		Display operation	1 x LED, green
		switching status	1 x LED, yellow

IQW200

Inductive sensor

IQ23008BBPKG/K1/SC/2M/PUR

Remarks	
Pack quantity	1 pcs.

Electrical connection

Cable: 2 m, PUR, Ø 4.9 mm; 3 x 0.34 mm²

Connection

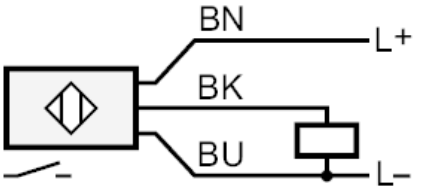

	Core colours
BN	brown
BK	black
BU	blue