Sensor, Series ST4

- 4 mm T-slot
- with cable
- Plug, M8, 3-pin, with knurled screw
- UL certification
- Reed
- Direct mounting for series PRA, SSI, GSU, RTC, CKP, GPC, MSC, MSN, RCM, CVI
- Indirect mounting for series MNI, CSL-RD, ICM



Certificates	UL (Underwriters Laboratories) cULus RoHS
Ambient temperature min./max.	-30 ... 80 °C
Protection class	IP65 IP67
Switching point precision	±0,1 mT
Min./max. DC operating voltage	See table
Switching logic	NO (make contact)
Display	LED
LED status display	Yellow
Vibration resistance	10 - 55 Hz, 1 mm
Shock resistance	30 g / 11 ms
Mounting screw	Combination: slotted and hexagon socket

Technical data

Part No.		for
R412019490		PRA, SSI, GSU, RTC, CKP, GPC, MSC, MSN, RCM, CVI
R412019686		PRA, SSI, GSU, RTC, CKP, GPC, MSC, MSN, RCM, CVI
R412019493		PRA, SSI, GSU, RTC, CKP, GPC, MSC, MSN, RCM, CVI
R412019687		PRA, SSI, GSU, RTC, CKP, GPC, MSC, MSN, RCM, CVI

Part No.	Type of contact	Cable length L	Min./max. DC operating voltage
R412019490	Reed	0,3 m	5 ... 30 V DC
R412019686	Reed	0,5 m	5 ... 30 V DC
R412019493	electronic PNP	0,3 m	10 ... 30 V DC
R412019687	electronic PNP	0,5 m	10 ... 30 V DC

Part No.	Voltage drop U at Imax	DC switching current, max.
R412019490	≤ 0,5 V	0,13 A
R412019686	≤ 0,5 V	0,13 A
R412019493	≤ 2,5 V	0,1 A
R412019687	≤ 2,5 V	0,1 A

Part No.	AC switching current, max.	Switching capacity
R412019490	0,13 A	3 W / 3 VA

Part No.	AC switching current, max.	Switching capacity
R412019686	0,13 A	3 W / 3 VA
R412019493	-	-
R412019687	-	-

Part No.	Version
R412019490	Protected against polarity reversal
R412019686	Protected against polarity reversal
R412019493	short circuit resistant Protected against polarity reversal
R412019687	short circuit resistant Protected against polarity reversal

Technical information

The max. switching capacity must not be exceeded.

Technical information

Material	
Housing	Polyamide, fiber-glass reinforced
Cable sheath	Polyurethane

Dimensions

Dimensions

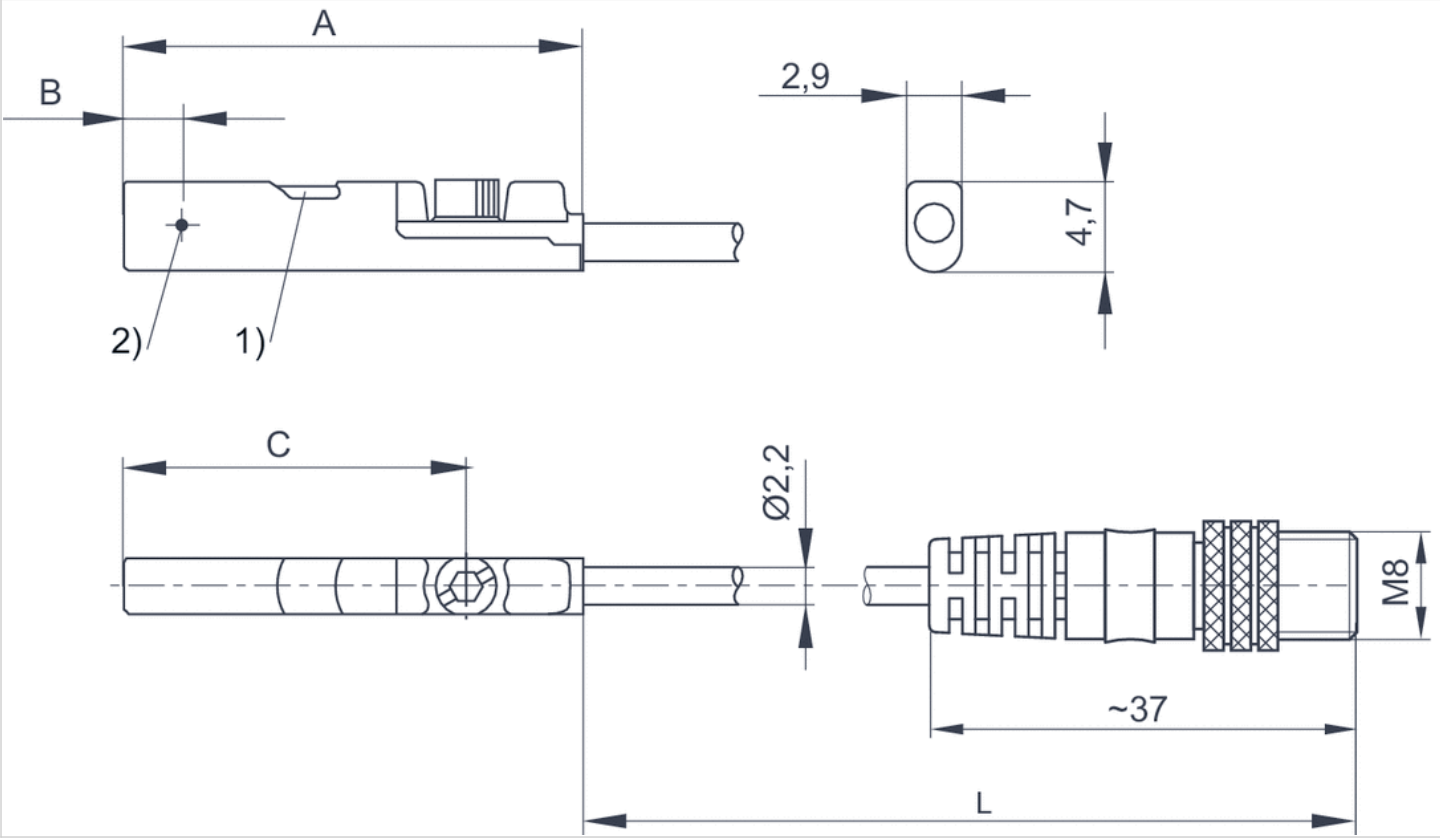

1) LED 2) Switching point
L = cable length

Dimensions

Part No.	A	B	C
R412019490	26.3	6.3	20.3
R412019686	26.3	6.3	20.3
R412019493	23.7	2.8	17.7
R412019687	23.7	2.8	17.7

Pin assignments

Pin assignments

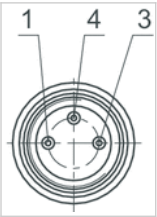

Pin	1	3	4
Allocation	(+)	(-)	(OUT)