PSE NO 22

Piezo Switch N.O.



PSE M22 RI



PSE M22 PI



PSE M22 RI Multicolor

RoHS COMPLIANT

Description

- Available in version Standard and lettered, from diameter 22 mm with Point Illumination or Ring Illumination
- Multicolor: flexible input voltage from 5 - 28 VDC at constant brightness
- with color combination RGB and RGY
- 7 possible colors with RGB configuration
- 3 possible colors with RGY configuration
- Assembly by mounting with nut
- Pins, Wire, Crimp Terminal male or Cable with Faston

Unique Selling Proposition

- Variety of design options regarding size, colour, shape, connection or lettering
- High reliability, long lifetime with more than 20 mill. actuations
- With multicolor ring illumination

Approvals

- EMC: EMC directive 2004/108/EWG
- DGUV Test Certificate: FW 11040 Requirements for Food Processing Equipment
- MIL-STD Certificate Number: 202F Method 107G, 202F Method 204D, 202F Method 213B, 416D Method RS103, 810E Method 501.3, 810E Method 502.3, 810E Method 507.3
- VDE Certificate Number: DIN EN 61000-4-2, DIN EN 61000-4-4, DIN EN 61000-4-5

Characteristics

- Housing material types: plastic, aluminum or stainless steel, ring illuminated version additionally made of polyamide
- For use in harsh environments, both indoors and outdoors

Other versions on request

- switch for longer switching signal duration, type: PSE IV
- switch for explosion proof applications, type: PSE EX
- switch with enhanced vandal proof protection, type: PSE HI
- as keypad, type: Piezo Keypad

References

Alternative: switch with prolonged signal: PSE IV 22
Alternative: switch vandal improved: PSE HI 22
Alternative: switch for EX proved applications: PSE EX 22

Weblinks

html-datasheet, General Product Information, CE declaration of conformity, RoHS, CHINA-RoHS, CAD-Drawings, Product News, Detailed request for product

Technical Data

Electrical Data	
Switching Function	N.O.
Supply Voltage	12 / 24 VDC Ring Illumination, 24 VDC Point Illumination,
Supply Voltage Multicolor	5 - 28 VDC
Switching Voltage	max. 42 / 60 VAC/DC
Switching Current	max. 100 mA
Rated Breaking Capacity	1 W
Lifetime	20 million at Rated Switching Capacity
Switch Resistance OFF	> 10 MΩ
Switch Resistance ON	< 20 Ω actuated (Ta = 25°C)
Capacity	5 nF
N.O. Closing Impulse Duration	20- 1000 ms depending on actuating force, time and speed
Contact Configuration	free polarity

Mechanical Data	
Actuating Force	≤ 3 N at ambient temperature
Actuating Travel	0.002 mm
Shock Protection	IK 02
Tightening Torque	2.5 Nm
Climatical Data	
Operating Temperature	-40 to +85 °C
Storage Temperature	-40 to +85 °C
IP-Protection	IP 67 acc. to IEC 60529, IP 69K acc. to DIN 40050-9
Environmental Assessment	55°C / 93% r.h. acc. to DIN EN 60068-2-30
Salt Spray Test (acc. to DIN 50021-SS)	24 h / 48 h / 96 h Residence Time
Material	
Housing (depending on type)	Stainless Steel, Aluminium anodized, Polyamide
Actuating Area / Insert (with Ring Illumination)	Stainless Steel, Aluminium anodized
Illuminated Ring (Ring Illumination)	Polyamide

Dimension

PSE M22 with Pins

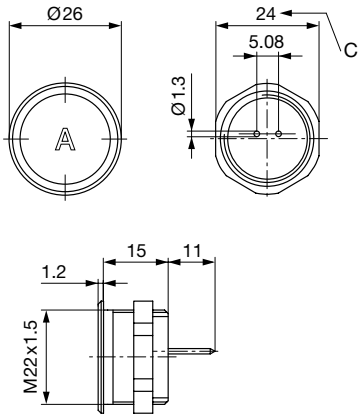

PSE M22 with Wire

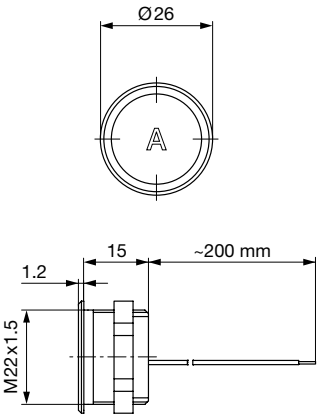

PSE M22 with Crimp Terminal male

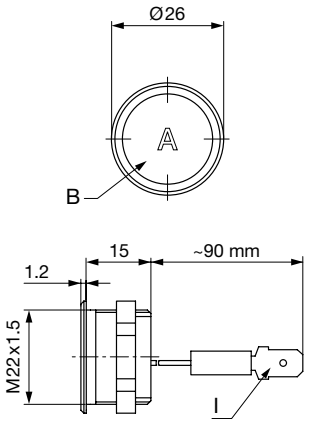

PSE M22 PI with Crimp Terminal male

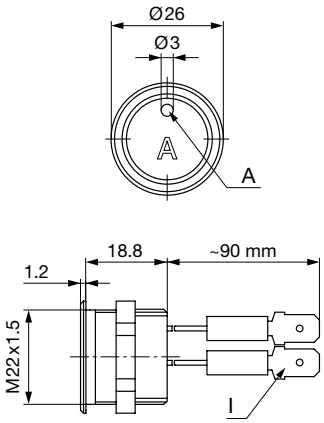

Version available on request

PSE M22 RI with Wires

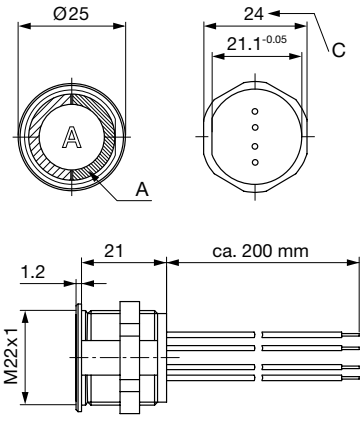

PSE M22 RI with Plug Connector

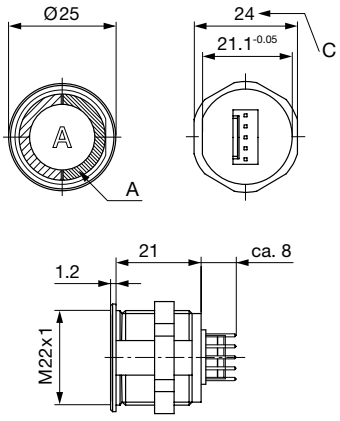

PSE M22 RI Multicolor with wires

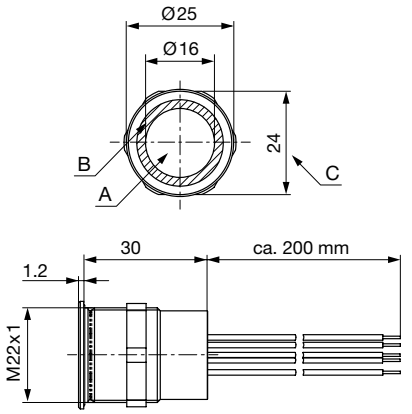

Design actuating area

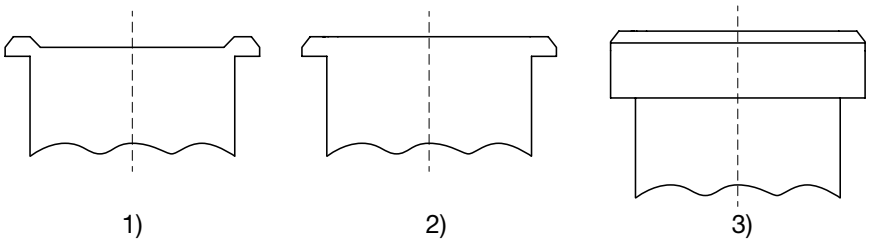

Legend:
A = Illumination Area
B = Actuating Area
C = Width Across Flats
I = Crimp Terminal male 6.3 x 0.8
PI = Point Illumination
RI = Ring Illumination

Lettering:
- either with/without lettering
- position of the connections with respect to the position of the lettering is not defined

1) with finger guidance (standard)
2) without finger guidance (on request)
3) elevated front design: M19 (standard, others on request)

Dimension

PSE M22

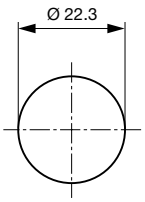

Drilling diagram

PSE M22 RI

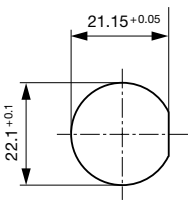

Drilling diagram

Diagrams

PSE PI

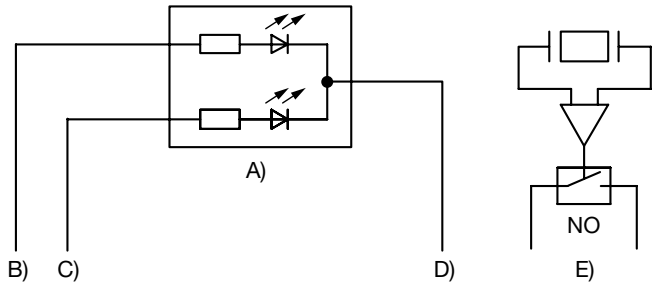

A) Double-LED (2 colors, 3 pins) or simple LED (2 pins)
B) Cable 1 (color 1 of the LED), Supply voltage
C) Cable 2 (color 2 of the LED), Supply voltage
D) Cable 3 (black), Mass
E) Cable 4 and 5 (white), input and output PSE switch

PSE M22 RI with Wires, 12/24 V

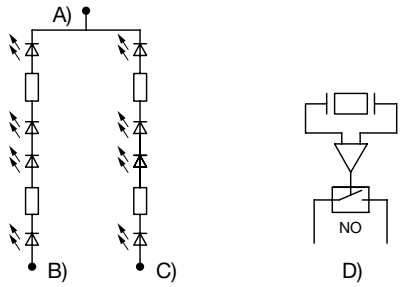

A) Cable 5 (black), Common mass of both LED groups
B) Cable 1 (color of the LEDs), Supply voltage first LED group
C) Cable 2 (color of the LEDs), Supply voltage second LED group
D) Cable 3 and 4 (white), Input and output PSE switch

PSE M22 RI with Quick Connect Terminal, 12/24 V

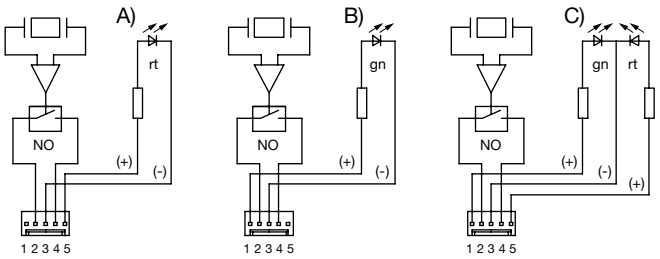

A) Illuminated red
B) Illuminated green
C) Illuminated red/green

PI = point illumination
RI = ring illumination

PSE M22 / M24 / M27 / M30 RI Multicolor

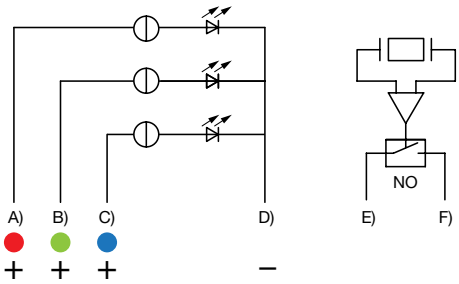

A) Cable 1 (color of the LED), Supply voltage
B) Cable 2 (color of the LED), Supply voltage
C) Cable 3 (color of the LED), Supply voltage
D) Cable 4 (black), Common mass
E) Cable 5/6 (white), Input and output PSE switch
F) Cable 5/6 (white), Input and output PSE switch

Lighting options Multicolor

Lighting type	Active terminal A) ●	Active terminal B) ●	Active terminal C) ●	Resulting Color
Multicolor Singlecolor	A			Red ●
Multicolor Singlecolor		B		Green ●
Multicolor Singlecolor			C	Blue ●
Multicolor RGB Additive 2	A	B		Yellow ●
Multicolor RGB Additive 2	A		C	Magenta ●
Multicolor RGB Additive 2		B	C	Cyan ●
Multicolor RGB Additive 3	A	B	C	White ○

Lettering

The last three digits in the order number define the lettering:	
001-076	Standard Lettering
101-	Customized Lettering

Lettering - Aluminium / Plastic Material

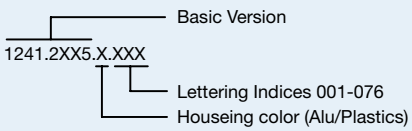

Lettering - Stainless Steel

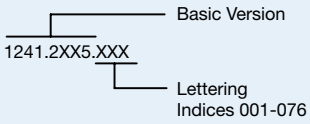

Lettering Colour of Laser Lettering

Material	Lettering Colour		
Stainless Steel	black	Filled letters	
Aluminum natural anodized	light grey	Filled letters	(only after customer approval)
Aluminum coloured anodized	light grey	Filled letters	

Order Index Lettering

Laser Marking			
001 = **A**	021 = **U**	041 = ÷	061 = **EIN**
002 = **B**	022 = **V**	042 = ✳	062 = **AUS**
003 = **C**	023 = **W**	043 = **=**	063 = **AUF**
004 = **D**	024 = **X**	044 = #	064 = **AB**
005 = **E**	025 = **Y**	045 = ↔	065 = **ON**
006 = **F**	026 = **Z**	046 = ↕	066 = **OFF**
007 = **G**	027 = **0**	047 = →	067 = **UP**
008 = **H**	028 = **1**	048 = ←	068 = **DOWN**
009 = **I**	029 = **2**	049 = ↓	069 = **HIGH**
010 = **J**	030 = **3**	050 = ↑	070 = **LOW**
011 = **K**	031 = **4**	051 = %	071 = **ON/OFF**
012 = **L**	032 = **5**	052 = √	072 = **START**
013 = **M**	033 = **6**	053 = **CTRL**	073 = **RESET**
014 = **N**	034 = **7**	054 = **RETURN**	074 = ⏻
015 = **O**	035 = **8**	055 = **SHIFT**	075 = 💡
016 = **P**	036 = **9**	056 = **LOCK**	076 = 🔔
017 = **Q**	037 = **+**	057 = **STOP**	
018 = **R**	038 = **-**	058 = **ENTER**	
019 = **S**	039 = **.**	059 = **BACK**	
020 = **T**	040 = x	060 = **LINE**	

All Variants

Mounting Diameter	Terminal	Housing Material, Torsion Protection	Colour of Housing	Actuator area	Illumination, LED	Config. Code	Order Number	
22	Flexible wire	Stainless Steel ,no	-	F	non-illuminated	PSE M 22 NO	1241.3004	
22	Flexible wire	Stainless Steel ,yes	-	E	Point Illumination, green, 24 VDC	PSE M 22 NO PI	1241.3594.M	
22	Flexible wire	Aluminum ,yes	Alu natural	F	Ring Illumination, blue, 12 VDC	PSE M 22 NO RI	1241.3390	
22	Flexible wire	Aluminum ,yes	Alu natural	E	Ring Illumination, green, 12 VDC	PSE M 22 NO RI	1241.3251	
22	Flexible wire	Aluminum ,yes	Alu natural	E	Ring Illumination, red / green, 12 VDC	PSE M 22 NO RI	1241.3252	■
22	Flexible wire	Aluminum ,yes	Alu natural	E	Ring Illumination, red, 12 VDC	PSE M 22 NO RI	1241.3250	
22	Flexible wire	Aluminum ,yes	Alu natural	F	Ring Illumination, blue, 24 VDC	PSE M 22 NO RI	1241.3413	
22	Flexible wire	Aluminum ,yes	Alu natural	E	Ring Illumination, green, 24	PSE M 22 NO RI	1241.3257	■
22	Flexible wire	Aluminum ,yes	Alu natural	E	Ring Illumination, red / green, 24 VDC	PSE M 22 NO RI	1241.3258	■
22	Flexible wire	Aluminum ,yes	Alu natural	E	Ring Illumination, red, 24 VDC	PSE M 22 NO RI	1241.3256	■
22	Flexible wire	Aluminum ,no	Alu natural	F	Multicolor Ring Illumination, red / green / blue, 5 - 28 VDC	PSE M 22 NO RI	1241.3663	■
22	Flexible wire	Aluminum ,no	Alu natural	F	Multicolor Ring Illumination, red / green / yellow, 5 - 28 VDC	PSE M 22 NO RI	1241.3664	■
22	Flexible wire	Stainless Steel ,no	-	E	Multicolor Ring Illumination, red / green / blue, 5 - 28 VDC	PSE M 22 NO RI	1241.3669	■
22	Plug Connector	Aluminum ,yes	Alu natural	E	Ring Illumination, green, 12 VDC	PSE M 22 NO RI	1241.3254	
22	Plug Connector	Aluminum ,yes	Alu natural	E	Ring Illumination, red, 12 VDC	PSE M 22 NO RI	1241.3253	
22	Plug Connector	Aluminum ,yes	Alu natural	E	Ring Illumination, green, 24 VDC	PSE M 22 NO RI	1241.3260	
22	Plug Connector	Aluminum ,yes	Alu natural	E	Ring Illumination, red / green, 24 VDC	PSE M 22 NO RI	1241.3261	■
22	Plug Connector	Aluminum ,yes	Alu natural	E	Ring Illumination, red, 24 VDC	PSE M 22 NO RI	1241.3259	
22	Quick Connect Terminal	Aluminum ,no	Alu natural	F	Point Illumination, blue, 24 VDC	PSE M 22 NO PI	1241.3244.M	■
22	Quick Connect Terminal	Aluminum ,no	Alu natural	F	Point Illumination, green, 24 VDC	PSE M 22 NO PI	1241.3089.M	■
22	Quick Connect Terminal	Aluminum ,no	green	F	Point Illumination, green, 24 VDC	PSE M 22 NO PI	1241.3167.M	
22	Quick Connect Terminal	Aluminum ,no	Alu natural	F	Point Illumination, red, 24 VDC	PSE M 22 NO PI	1241.3020.M	■
22	Quick Connect Terminal	Aluminum ,no	red	F	Point Illumination, red, 24 VDC	PSE M 22 NO PI	1241.3166.M	
22	Quick Connect Terminal	Aluminum ,no	Alu natural	F	Point Illumination, yellow, 24 VDC	PSE M 22 NO PI	1241.3047.M	
22	Quick Connect Terminal	Aluminum ,no	gold	F	Point Illumination, yellow, 24 VDC	PSE M 22 NO PI	1241.3222.M	
22	Molex connection	Aluminum ,yes	Alu natural	E	Ring Illumination, red / green, 12 VDC	PSE M 22 NO RI	1241.3255	
22	Pins	Aluminum ,no	red	F	non-illuminated	PSE M 22 NO	1241.3005	■
22	Pins	Aluminum ,no	green	F	non-illuminated	PSE M 22 NO	1241.3006	■
22	Pins	Aluminum ,no	black	F	non-illuminated	PSE M 22 NO	1241.3007	■
22	Pins	Aluminum ,no	Alu natural	F	non-illuminated	PSE M 22 NO	1241.3008	■
22	Pins	Stainless Steel ,no	-	F	non-illuminated	PSE M 22 NO	1241.3075	■

Legend:
Type: PSE
NO = normaly open
IV = prolonged signal
RU = PI = Point Illumination
RI = Ring Illumination
LE = Lettered
K = Plastics
Alu = Aluminium
ES = Stainless steel
F = Finger guidance
E = without finger guidance

Plastic nut with gasket are enclosed in the box.

Other mounting diameters, materials, colors, connections, supply voltages possible available on request.
Special materials e.g. Marine grade stainless steel for use in salt and chlorinated environment on request.

■ Most Popular.

Availability for all products can be searched real-time:http://www.schurter.com/Stock-Check/Stock-Check-SCHURTER

Packaging unit 10 in box with insert or packed in air cushion bags





- Actuating elements in ESD safe packaging
- Screw nuts and sealing rings in a bag (enclosd in the box)

Accessories

	Description
	Connecting Terminal PSE Connecting Terminal

02.05.2016

The specifications, descriptions and illustrations indicated in this document are based on current information. All content is subject to modifications and amendments. Information furnished is believed to be accurate and reliable. However, users should independently evaluate the suitability and test each product selected for their own applications.