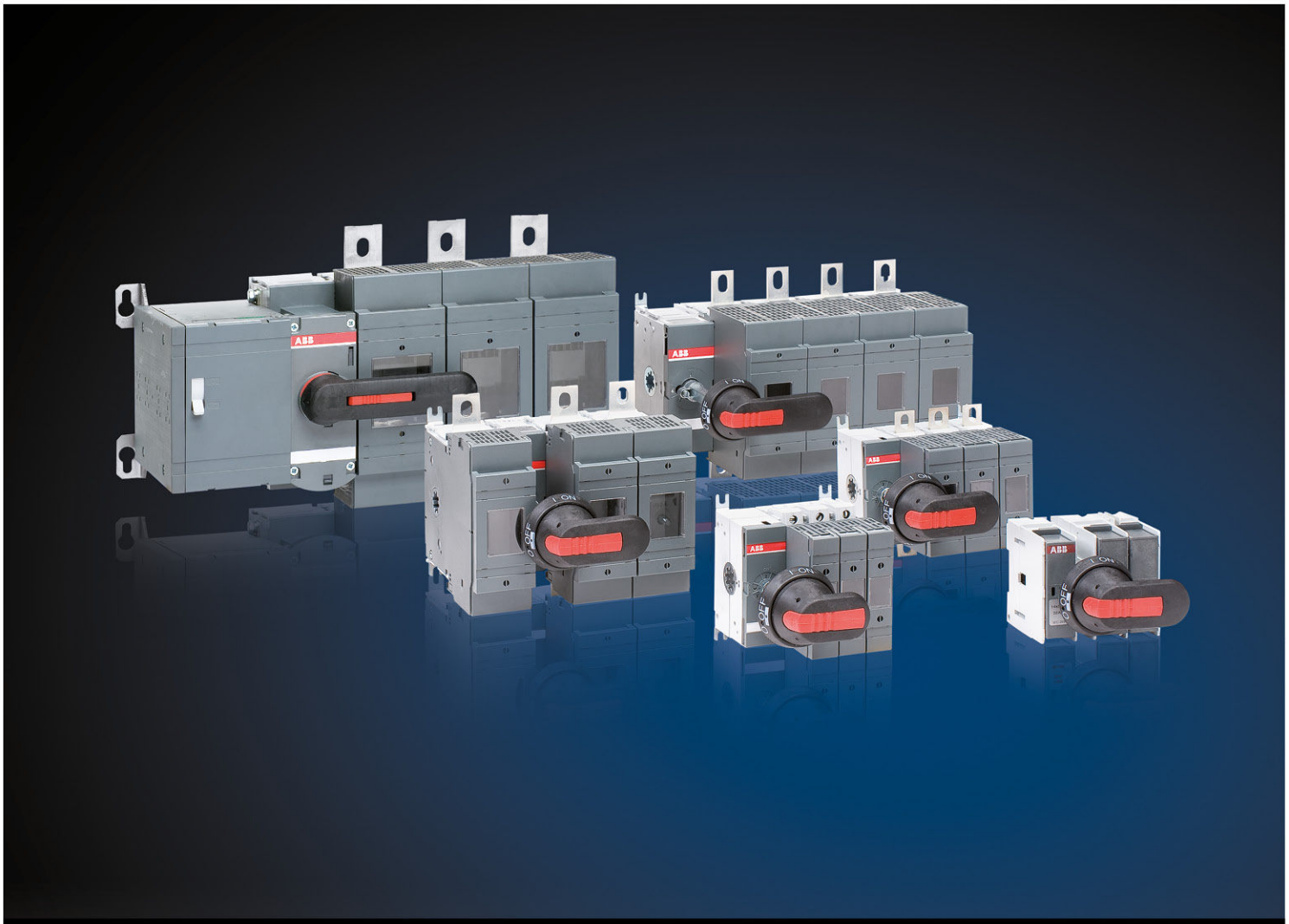

Low Voltage Switches

Fusegear
Switch fuses OS and OSM

Power and productivity
for a better world™

Switch fuses
OS 16...1250, OSM 32...1250

Contents

4 Product overview

6 Features

8 Technical data

16 Ordering information, manual operation
16 Front operated switch fuses OS
25 Side operated switch fuses OS

31 Ordering information, motorized operation
31 Motorized switch fuses OSM

34 Ordering information, accessories
34 Selection overview
36 Optional handles
38 Extended shafts and shaft accessories
40 Auxiliary contacts
42 Fourth poles and neutral links
43 Solid links, handle and spare fuse storage
44 Terminal shrouds and phase barriers
45 Connecting accessories
47 Conversion kits
49 Blown fuse indicators
50 Locking and mounting accessories

51 Dimension drawings, manual operation

66 Dimension drawings, motorized operation

70 Dimension drawings, accessories

72 Contact functions

74 Index

Switch fuses 16...1250 Amperes

Manual operation



DIN	OS16FD	OS40FD	OS32GD	OS125GD	
	OS35FD		OS63GD	OS160GD	
BS	OS20FB		OS32GB	OS100GB	
	OS32FB		OS63GB	OS125GB	
				OS160GB	
NFC	OS25FF		OS50GF	OS125GF	
	OS32FF				
UL/CSA	OS30FACC		OS60GJ		OS100GJ
	OS30FAJ				

	OS Mini							OS						
Switch size [A]	**16**	**20**	**25**	**30**	**32**	**35**	**40**	**32**	**50**	**60**	**63**	**100**	**125**	**160**
AC23/400 V [kW]	7.5		11		15	15	18.5	15	22		30		55	75
AC23/415 V [kW]		7.5			15			15			30	55	55	75
480 V [HP]				15						30		60		
600 V [HP]				20						50		75		

Motor operation



DIN		OSM32GD	OSM125GD
		OSM63GD	OSM160GD
BS		OSM32GB	OSM100GB
		OSM63GB	OSM125GB
			OSM160GB
NFC		OSM50GF	OSM125GF

	OSM					
Switch size [A]	**32**	**50**	**63**	**100**	**125**	**160**

Accessories	Solid links
Optional handles	Terminal shrouds
Extended shafts	Connecting accessories
Auxiliary contacts	Conversion kits
Fourth poles	Blown fuse indicators
N & PE terminals	Locking accessories











OS200D	OS400D	OS630D	OS1250D
OS250D		OS800D	
OS200B	OS315B	OS630B	OS1250B
OS250B	OS400B	OS800B	
OS200J	OS400J	OS600J	OS1200L
		OS800L	
200 250	**315 400**	**600 630 800**	**1200 1250**
110 140	220	355 450	560
110 145	180 230	355 450	560
150	250	400 500	-
200	350	500 600	-









OSM200D	OSM400D	OSM630D	OSM1250D
OSM250D		OSM800D	
OSM200B	OSM315B	OSM630B	OSM1250B
OSM250B	OSM400B	OSM800B	
200 250	**315 400**	**630 800**	**1250**

Complete range of switch fuses
From 16 to 1 250 A, 690 V

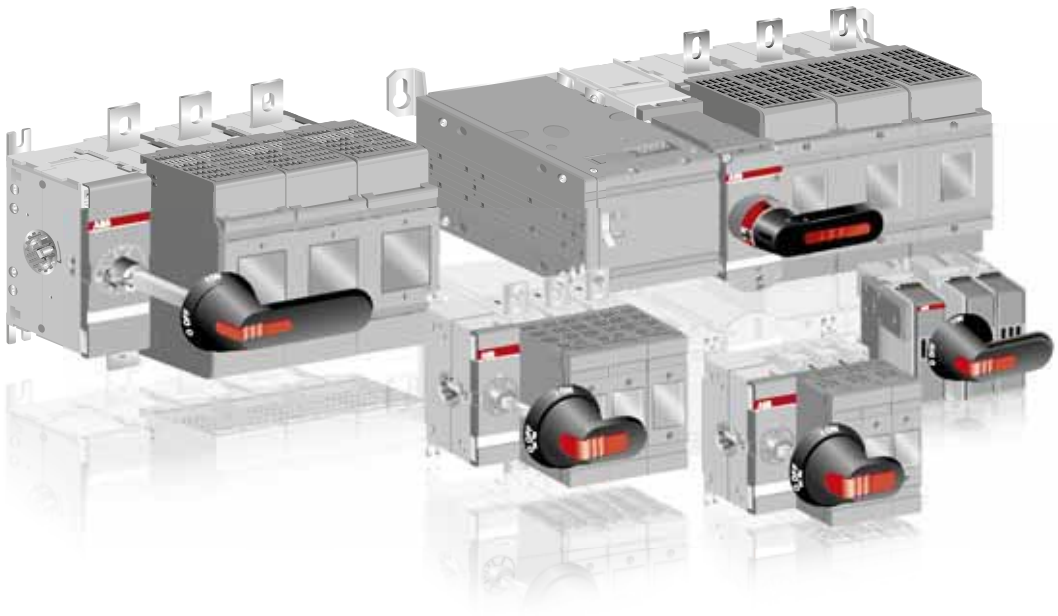

Features within the range of ABB switch fuses include single pole to four pole versions.
The switch fuse mechanism located in any position, increasing the ease of installation and adaptability to different types of cubicle designs (OS32G...1250).

A wide selection of accessories improve the usability of the switch fuses; 6 and 8- pole, changeover, by-pass and mechanically interlocked switch combinations can be built up by means of conversion kits.

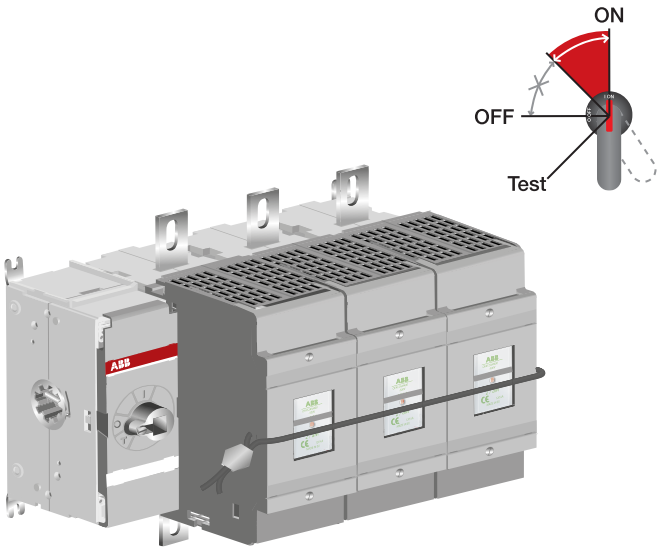

The switch fuses are available for all types of fuse links, DIN, BS, NFC, UL, CSA. Switch fuses are also suitable for remote control by the motorized OSM versions.

Designed for safety

The switch fuse ensures safe operation, protecting both people and equipment.

Designed and based on substantial experience of electrical safety, the switch fuse eliminates the risk of electrical accidents:

- The fuse covers cannot be opened while the switch fuse is in the ON-position and can be sealed in the closed position.
- The double insulated external operating handle eliminates the risk of touching live parts outside the box.
- The handle indicates the position of the contacts with complete reliability in all situations.
- The frame is made of robust plastic with excellent mechanical and thermal properties.
- Voltage output pins (as standard)
- Pole markings as standard

▸ You take no risks with OS16...1250 switch fuses

Switch fuses for extreme conditions - Numerous applications require switch fuses that can withstand extreme conditions. High voltages and high short circuit currents create a demand for superior performance without neglecting safety.

Easy, flexible installation

The OS 32...1250 switch fuse is easy to use and a snap to install according to your choice: the adjustable mounting feet allow both top and side mounting of the switch fuse.

The OS switch fuse offers you flexible cabling options. The high terminal positioning with space to the back plate simplifies the mounting of cables. It's also ideal for double cabling, which in turn saves on space.

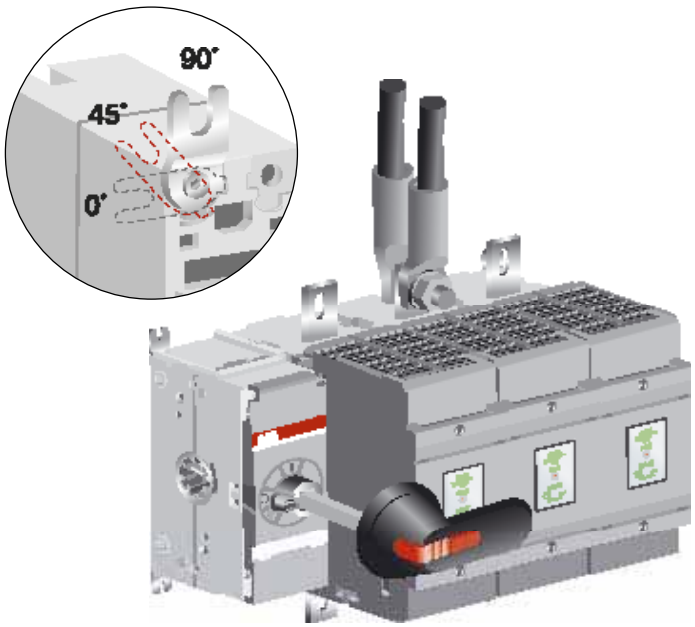

Superior performance

- High CTI in supporting parts, resulting high U_i ratings
- The contact constructions are optimal, regardless of fuse type, DIN, BS, NFC or UL-type
- Meets the requirements for installation close to the main transformer up to 100 kA in heavy industry and in ships

▸ High performance level and smart design makes OS switch fuses suitable for all applications in low voltage networks.

Compact construction

- Intelligent construction in combination with a small number of components results in a very compact mechanism design
- Very small footprint area

▸ Space savings mean cost reduction!

Switch fuses OS16...160
Technical data

Technical data according to IEC 60947-3		Switch size	A	OS Mini 16	OS Mini 20	OS Mini 25
Rated insulation voltage	Pollution degree 3		V	1 000	1 000	1 000
Dielectric strength		50 Hz 1min.	kV	10	10	10
Rated impulse withstand voltage			kV	12	12	12
Rated thermal current in ambient 35 °C	In open air		A/W	16/3.5	20/3.5	25/3.5
and temporarily 40 °C [5] /	In enclosure[2]		A/W	16/3.5	20/3.5	25/3.5
max. fuse power dissipation[1]	In enclosure with solid links		A	32	32	32
...with minimum cable cross section		Cu	mm^2	2.5	2.5	4
Rated operational voltage AC-20 and DC-20			V	1 000	1 000	1 000
Rated operational current, AC-21A		up to 500 V	A	16	20	25
		690 V	A	16	20	25
Rated operational current, AC-22A		up to 500 V	A	16	20	25
		690 V	A	16	20	25
Rated operational current, AC-23A		up to 500 V	A	16	20	25
		690 V	A	16	20	25
Rated operational current / poles in series DC-21A		48 V	A	16/2	20/2	25/2
		110-220 V	A	16/2	20/2	25/2
		440 V	A	16/4	20/4	25/4
Rated operational current / poles in series DC-22A		48 V	A	16/2	20/2	25/2
		110-220 V	A	16/2	20/2	25/2
		440 V	A	16/4	20/4	25/4
Rated operational current / poles in series DC-23A		48 V	A	16/2	20/2	25/2
		110-220 V	A	16/2	20/2	25/2
		440 V	A	16/4	20/4	25/4
Rated operational power, AC-23[4]	The kW-ratings are accurate for	230 V	kW	4	5.5	5.5
	three-phase 1500 R.P.M. standard	400 V	kW	7.5	7.5	11
	asynchronous motors.	415 V	kW	7.5	7.5	11
		500 V	kW	7.5	11	15
		690 V	kW	11	15	22
Rated breaking capacity in category AC-23		≤ 690 V	A	256	256	256
Rated breaking capacity / poles in series		up to 220 V	A	128/2	128/2	128/2
in category DC-23		440 V	A	128/4	128/4	128/4
Rated conditional short-circuit current	at prospective SC-current	80 kA, 415 V	kA	9	9	9
I_p (r.m.s.) and corresponding max. allowed	Max. OFA_ fuse size gG / aM		A			
cut-off current $\hat{i}_c$	at prospective SC-current	100 kA, 500 V	kA	8	8	8
	Max. OFA_ fuse size gG / aM		A			
The cut-off current $\hat{i}_c$ refers to values	at prospective SC-current	50 kA, 690 V	kA	7	7	7
listed by fuse manufacturers	Max. OFA_ fuse size gG / aM		A			
(single phase test acc. to IEC60269).	at prospective SC-current	80 kA, 690 V	kA	7.5	7.5	7.5
	Max. OFA_ fuse size gG / aM		A			
Rated short-time withstand current, 1 s.	r.m.s. -value		kA	1	1	1
Rated capacitor power	The capacitor rating of the	400 V	kVAr	5	10	12.5
when no initial charge on the capacitor	switch-fuse is limited by	415 V	kVAr	5	10	12
	the fuse link.	690 V	kVAr	8	15	20
Power loss / pole	With rated current, without fuse		W	0.8	1.3	1.3
Mechanical endurance	Divide by two for operation cycles		Oper.	20 000	20 000	20 000
Fuse types, IEC 60269-2-1	DIN 43620, Neozed DIN49522			D 01		
	NFC 63210, 63211					10x38
	BS 88-2, -6 -size /				A1	
	distance of fuse-link bolts		mm		M4/44.5	
			mm			
Weight without accessories	3-pole switch fuses		kg	0.7	0.7	0.7
	4-pole switch fuses		kg	0.9	0.9	0.9
Built-in terminal size		Cu	mm^2	0.75...10	0.75...10	0.75...10
Terminal bolt size (included)	Metric thread diameter x length		mm			
Terminal tightening torque	Counter torque required		Nm	2	2	2
Fuse-links bolts tightening torque			Nm		2	
Operating torque	Typical for 3-pole switch fuses		Nm	3	3	3

*** = Utilization category B**
[1] Ambient temperature 60°C: derating 20%
Mounting on "ceiling": derating 10%,
[2] OS160G: Mounting on wall, horizontal fuses: derating 5%
[3] Max. fuse body diam. 32 mm
[4] Some fuse links limit these figures further. Starting current characteristics must be considered separately
[5] Acc. to IEC 60947-1, § 6.1.1. Minimum ambient temperature -5°C. Category B: -5°C...-35°C
[6] Max. fuse body diam. 22 mm

OS Mini 32	OS Mini 35	OS Mini 40	OS 32G	OS 50G	OS 63G	OS 100G	OS 125G	OS 160G
1 000	1 000	1 000	1 000	1 000	1 000	1 000	1 000	1 000
10	10	10	10	10	10	10	10	10
12	12	12	12	12	12	8	8	8
32/3.5	35/4	40/4.5	32/7.5	50/7.5	63/7.5	100/12	125/12	160/12
32/3.5	35/4	40/4.5	32/7.5	50/7.5	63/7.5	100/12	125/12	160/12
32	35	40						
6	10	10	6	10	16	50	50	70
1 000	1 000	1 000	1 000	1 000	1 000	1 000	1 000	1 000
32	35	40	32	50	63	100	125	160
32	35	40	32	50	63	100	125	160
32	35	40	32	50	63	100	125	160
32	35	40	32	50	63	100	125	160
32	35	40	32	50	63	100	125	160
32	35	40	32	50	63	100	125	160
32/2	32/2	32/2	32/2	50/2	63/2	100/2	125/2	160/2
32/2	32/2	32/2	32/2*	50/2*	63/2*	100/2*	125/2*	125/2*
32/4	32/4	32/4	32/4*	50/4*	50/4*	100/4*	125/4*	125/4*
32/2	32/2	32/2	32/2	50/2	63/2	100/2	125/2	160/2
32/2	32/2	32/2	32/2*	50/2*	63/2*	100/2*	125/2*	125/2*
32/4	32/4	32/4						
32/2	32/2	32/2	32/2	50/2	63/2	100/2	125/2	160/2
32/2	32/2	32/2	32/2*	50/2*	63/2*	100/2*	125/2*	125/2*
32/4	32/4	32/4						
7.5	7.5	11	7.5	11	18.5	30	37	45
15	15	18.5	15	22	30	55	55	75
15	15	18.5	15	22	30	55	55	75
18.5	22	22	18.5	30	37	55	75	90
22	30	30	22	37	55	90	110	132
256	280	320	504	504	504	1280	1280	1280
128/2	128/2	128/2	252/2	252/2	252/2	640/2	640/2	640/2
128/4	128/4	128/4						
9	9	9	13.5	13.5	13.5	23.5	23.5	23.5
			80/63	80/63	80/63	160/160	160/160	160/160
8	8	8	12.5	12.5	12.5	25.5	25.5	25.5
			63/50	63/50	63/50	160/160	160/160	160/160
7	7	7	9.5	9.5	9.5	17.5	17.5	17.5
			63/50	63/50	63/50	125/160	125/160	125/160
7.5	7.5	7.5	11.5	11.5	11.5	20.5	20.5	20.5
			50/50	50/50	50/50	125/160	125/160	125/160
1	1	1	2.5	2.5	2.5	5	5	5
15	15	15	15	20	25	40	50	60
15	15	15	15	25	32	42	55	65
25	25	25	25	42	50	75	90	100
2	2.4	3.5	1	2.5	4	4	5	9
20 000	20 000	20 000	20 000	20 000	20 000	20 000	20 000	20 000
	D 02	000	000		000		000, 00	000, 00
14x51				14x51			22x58	
A1, A2, F1			A2-A3[6]		A2-A3[6]	A2-A4[3]	A2-A4[3]	A2-A4[3]
M4/44.5 (A1)			M5/73		M5/73	M5/73, M8/94	M5/73, M8/94	M5/73, M8/94
M4/73 (A2)								
0.7	0.7	0.8	1.1	1.1	1.1	1.5	1.5	1.5
0.9	0.9	1.0	1.3	1.3	1.3	1.8	1.8	1.8
0.75...10	0.75...10	0.75...10	2.5...25	2.5...25	2.5...25			
						M8x25	M8x25	M8x25
2	2	2	4	4	4	15-22	15-22	15-22
2			3.5		3.5	M5:3.5 M8:5	M5:3.5 M8:5	M5:3.5 M8:5
3	3	3	5	5	5	7	7	7

Placing options of the operating mechanism

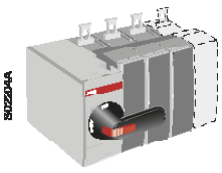

At the end of the switch fuse OS_03 or 04

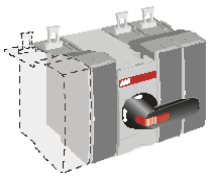

Between the poles OS_12 or 22

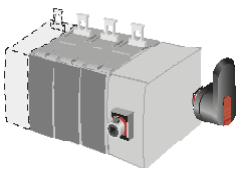

Side operated types OS_30 or 40 OS_03 or 04

Switch fuses OS200...1250
Technical data

Technical data according to IEC 60947-3		Switch size	A	OS 200_
Rated insulation voltage and rated operational voltage AC-20 and DC-20	Pollution degree 3		V	1000
Dielectric strength		50 Hz 1min.	kV	10
Rated impulse withstand voltage			kV	12
Rated thermal current in ambient 35 °C and temporarily in 40 °C [5] / max. fuse power dissipation	In open air		A/W	200/17
	In enclosure		A/W	200/15
...with minimum cable cross section		Cu	mm^2	95
Rated thermal current of detachable neutral	In open air / Cu cable or bar cross section	In "N3" types	A/mm^2	290/120
Derating, mounting on wall horizontal fuses	In open air or ventilated enclosure		%	0
	Totally enclosed		%	5
Derating, mounting on 'ceilig'			%	10
Derating at 60 °C	In open air / in enclosure		%	20/20
Rated operational current AC-21A		≤ 500 V	A	200
		690 V	A	200
Rated operational current AC-22A		≤ 415 V	A	200
		500 V	A	200
		690 V	A	200
Rated operational current AC-23A		≤ 415 V	A	200
		500 V	A	200
		690 V	A	200
Rated operational current / poles in series DC-21A, DC-22A and DC-23A		≤ 220 V	A	200/1
		440 V	A	200/2
		660 V	A	200/3
		750 V	A	180/4
		880 V	A	180/4
Rated operational power AC-23[1]		230 V	kW	60
		400 V	kW	110
		415 V	kW	110
		500 V	kW	132
		690 V	kW	200
Rated breaking capacity AC-23		≤ 690 V	A	1600
Rated conditional short-circuit current I_p (r.m.s.)	I_p (r.m.s.)	80 kA, 415 V	kA	35
	Max. OFA_ fuse size gG/aM		A	250/200
and corresponding max. allowed cut-off current $\hat{i}_c$	I_p (r.m.s.)	100 kA, 500 V	kA	37.5
	Max. OFA_ fuse size gG/aM		A	250/200
	I_p (r.m.s.)	80 kA, 690 V	kA	25
	Max. OFA_ fuse size gG/aM		A	160/
The cut-off current $\hat{i}_c$ refers to values listed by fuse manufacturers (single phase test acc. to IEC60269)	I_p (r.m.s.)	50 kA, 415 V	kA	28
	Max. BS fuse size gG/gM		A	200/200M315
	I_p (r.m.s.)	80 kA, 690 V	kA	28
	Max. BS fuse size gG/gM		A	200/200M250
Rated short-time withstand current, 1s.	r.m.s. -value		kA	8
	Max. distance from switch frame to nearest busbar/cable support		mm	150
Rated capacitor power when no initial charge of the capacitor	The capacitor ratings of the switch-fuses are limited by the fuse links	400 V	kVAr	90
		415 V	kVAr	100
		500 V	kVAr	120
		690 V	kVAr	160
Power loss / pole	With rated current, without fuse		W	8
Mechanical endurance	Divide by two for operation cycles		Oper.	20 000
Fuse types, IEC 60269-2	Sec. I, DIN 43620			0
	Sec. IA, NFC 0-3 Ref.A, 4a Ref.B			1
	Sec. II, BS 88			B1-B2
	Size / distance of fuse-link bolts		mm	M6/111
Weight without accessories	3-pole switch fuses		kg	2.6
Terminal bolt size (included)	Metric thread diameter x length		mm	M8x25
Terminal tightening torque	Counter torque required		Nm	15-22
Fuse-links bolts tightening torque			Nm	4
Operating torque	Typical for 3-pole switch fuses		Nm	7

[1] These values are given for guidance and may vary acc. to the motor manufacturer.
[2] Max fuse body dia 52 mm.
[3] Max fuse body dia 62 mm.
[4] Category B
[5] Acc. to IEC 60957-2, IEC 60947-1, § 6.1.1. Minimum ambient temperature -5°C. Category B: -5°C...-35°C

OS 250_	OS 315_	OS 400_	OS 630_	OS 800_	OS 1250_
1000	1000	1000	1000	1000	1000
10	10	10	10	10	10
12	12	12	12	12	12
250/23	315/32	400/45	630/60	800/65	1250/110
250/20	315/32	400/30	570/50	720/55	1000/85
120	185	240	2 x 185	2 x 240	2 x 400
290/120	450/240	450/240	900/2 X 240	900/2 x 240	1250/2 x 400
0	0	4	0	4	4
5	5	8	5	8	8
10	10	10	10	10	10
20/20	20/20	20/20	20/20	20/20	20/20
250	315	400	630	800	1250 [4]
250	315	400	630	800	1250 [4]
250	315	400	630	800	1250
250	315	400	630	800	1250 [4]
250	315	400	630	800	1250 [4]
250	315	400	630	800	1000
250	315	400	630	800	1000 [4]
250	315	400	630	800	1000 [4]
250/1	315/2	400/2	630/1 [4]	800/1 [4]	
250/2	315/3 [4]	400/3 [4]	630/2 [4]	800/2 [4]	
250/3	315/4 [4]	400/4 [4]	630/3 [4]	720/3 [4]	
230/4	315/4 [4]	400/4 [4]	630/4 [4]	720/4 [4]	
230/4			630/4 [4]	720/4 [4]	
75	100	132	200	250	315
140	160	220	355	450	560
145	180	230	355	450	560
170	220	280	450	560	710
250	315	400	630	710	1000
2000	3200	3200	6400	6400	8000
40.5		59	77	77	89
355/315		500/500	800/800	800/800	1250/1250
37.5		63.5	83	83	105
250/250		500/500	800/800	800/800	1250/-
32.5		46	55	55	88
200/250		315/400	500/630	500/630	1000/1000
28	44	44	67	67	90
250/200M315	400/400M500	400/400M500			
28	48	48	55	55	109
250/200M250	400/400M450	400/400M450			1250/-
8	14	14	18	18	40
150	150	150	150	150	150
105	145	180	250	310	440
115	160	200	270	340	460
135	175	215	300	375	550
190	250	325	450	550	750
13	19	30	46	75	75
20 000	16 000	16 000	10 000	10 000	6000
0-1		0-2	3	3	4, 4 a
	2	3	3	4 a	
B1-B3 [2]	B1-B4 [3]	B1-B4 [3]	C1-C2	C1-C3	D1
M8/111	M8/111	M8/111	M10/133, 184	M10/133, 184	2xM12/149
3.1	5.7	5.7	11.5	11.5	29
M10x30	M10x30	M10x30	M12x40	M12x40	M12x50
30-44	30-44	30-44	50-75	50-75	50-75
5	20	20	M10:30 M12:40	M10:30 M12:40	M12:40
7	19	19	38	38	65

Placing options of the operating mechanism

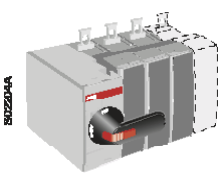

At the end of the switch fuse OS_03 or 04

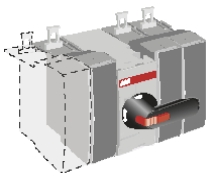

Between the poles OS_12 or 22

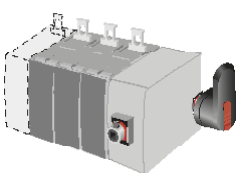

Side operated types OS_30 or 40 OS_03 or 04

Fusible disconnect switches OS30...1200
Technical data

			Switch size	A	OS Mini 30	OS 60G
Approvals [4]				2 pole	-	UL/CSA
UL98, UL248, UL512				3 pole	UL/CSA	UL/CSA
CSA C 22.2 No 4, No 248				4 pole	UL/CSA	UL/CSA

Technical data according to UL/CSA						
General purpose amp rating	pf= 0.7...0.8	-40° to 40 °C		A	30	60
Max. oprerating voltage				VAC	600	600
				VDC	250	250
Max. horsepower rating / motor FLA current	pf= 0.4...0.5 Three phase	240 V		HP/A	7.5/22.0	15/42.0
		480 V		HP/A	15/21.0	30/40.0
		600 V		HP/A	20/22.0	50/52.0
	Single phase	120 V		HP/A	2/24.0	
		240 V		HP/A	3/17.0	
Short circuit rating with fuse, 3 and4-pole types				kA	200	200
	UL/CSA fuse size			A	30	60
	UL/CSA fuse type				J/CC	J
Min. electrical endurance	pf= 0.75...0.8	operation cycles			6000	6000
Mechanical endurance		operation			20 000	20 000
Terminal lug kits					Integral	Integral
Wire range				AWG	#18-8	#14-4
Torque	Wire tightening			lb.in	17	30
	Lug mounting			lb.in	N/A	N/A

Technical data according to IEC 60947-3						
Rated insulation voltage	Pollution degree 3			V	1 000	1 000
Dielectric strength		50 Hz 1min.		kV	10	10
Rated impulse withstand voltage				kV	12	
Rated thermal current in ambient 40 °C /	In open air			A/W	32/3.5	63/7.5
max. fuse power dissipation[1]	In enclosure[2]			A/W	32/3.5	63/7.5
...with minimum cable cross section		Cu		mm^2	6	16
Rated operational current, AC-23A		up to 500 V		A	32	63
		690 V		A	32	63
Rated operational power, AC-23[3]	The kW-ratings are accurate for	230 V		kW	7.5	18.5
	three-phase 1500 R.P.M.	400 V		kW	15	30
	standard asynchronous motors.	415 V		kW	15	30
		500 V		kW	18.5	37
		690 V		kW	22	55
Rated breaking capacity in category AC-23		up to 500 V		A	256	504
		690 V		A	256	504
Rated short-time withstand current, 1 s	r.m.s. -value			kA	1	2.5
Power loss / pole	With rated current, without fuse			W	2	4
Weight without accessories	3-pole switch fuses			kg	0.7	1.3
	4-pole switch fuses			kg	0.9	1.6
Built-in terminal size		Cu		mm^2	0.75...10	2.5...25
Terminal bolt size (included)	Metric thread diameter x length			mm		
Fuse-links bolts tightening torque				Nm		

[1] = Utilization category B
[1] Ambient temperature 60 °C: derating 20%
[2] Mounting on "ceiling": derating 10%. Mounting on wall, horizontal fuses: derating 8%
[3] Some fuse links limit these figures further. Starting current characteristics must be considered separately.
[4] OS60G...100G approval pending

	OS 100G	OS 200	OS 400	OS 600	OS 800	OS 1200
	UL/CSA	UL/CSA	UL/CSA	UL/CSA	UL/CSA	UL/CSA
	UL/CSA	UL/CSA	UL/CSA	UL/CSA	UL/CSA	UL/CSA
	UL/CSA	UL/CSA	UL/CSA	UL/CSA	UL/CSA	UL/CSA
	100	200	400	600	800	1200
	600	600	600	600	600	600
	250	250	250	250	250	250
	30/80.0	60/154.0	125.0/312.0	200/480.0	250/602.0	
	60/77.0	125/156.0	250.0/302.0	400/477.0	500/590.0	
	75/77.0	150/144.0	350.0/336.0	500/472.0	500/472.0	
	200	200	200	200	200	200
	100	200	400	600	800	1200
	J	J	J	J	L	L
	6000	6000	1000	1000	500	500
	20 000	16 000	12 000	4000	3000	2000
	OZXA-24	OZXA-200	OZXA-400	OZXA-800	OZXA-800	OZXA-1200
	#14-2/0	#4-300MCM	#2-600MCM	(2)#2-600MCM	(2)#2-600MCM	(4)#2-600MCM
	120	275	375	500	500	500
	50	72	240	480	480	480
	1 000	1 000	1 000	1 000	1 000	1000
	10	10	10	10	10	10
		12	12	12	12	12
	160/12	200/17	400/45	630/60	800/65	1250/110
	160/10, 135/12	200/15	400/30	570/50	720/55	1000/85
	70	95	240	2x185	2x240	2x400
	160	200	400	630	800	1000 *)
	160	200	400	630	800	1000 *)
	45	60	132	200	250	315 *)
	75	110	220	355	450	560 *)
	75	110	230	355	450	560 *)
	90	132	280	450	560	710 *)
	132	200	400	630	710	1000 *)
	1280	1600	3200	6400	6400	8000
	1280	1600	3200	6400	6400	8000
	5	8	14	20	20	
	9	8	30	46	75	75
	1.5	2.6	5.7	11.5	11.5	29
	1.8					
	M6x20	M8x25	M10x30	M12x40	M12x40	M12x50
	M5:3.5 M8:5	4	20	40	40	40

Motorized switch fuses OSM32...1250
Technical data, motor operators

Data for motor operator OSM according to IEC 60947		Switch size	A	32...63
Rated operational voltage U_e	Pollution degree 3			
	50/60 Hz		V AC	220 - 240
Operating voltage range				0.85 - 1.1 x U_e
Operating time [1]	90° I - 0, 0 - I	220-240VAC	s	0.5 - 1.0
Nominal current I_n [1]		220-240VAC	A	0.3
Current Inrush [1]		220-240VAC	A	1.5
Overload fuse	Type / I_n / Capacity	220-240VAC	mA	T / 315 / H
	Size		mm	5x20
Operating rate	Cycle 0 - I - 0			
	Max. continuous	220-240VAC	cycles / min	1
	Max. short-time ≤ 10 cycles	220-240VAC	cycles / min	10
Overvoltage category				III
Rated impulse withstand voltage U_{imp}			kV	4
Dielectric strength		50 Hz 1 min.	kV	1.5
Impulse command		Min. impulse		
		duration	ms	100
Terminals				
	Voltage supply wiring for U_e		PE - N - L	PE - N - L
	Cross section	solid/stranded	mm^2	1.5 - 2.5
	Short-circuit protection device	max.fuse size	A	16
	Push-button control	C - I - O		no SELV
	Cross section	solid/stranded	mm^2	1.5 - 2.5
	Maximum cable length		m	100
State information of locking				no SELV
	Handle attached or motor operator locked	11-12-14 (C/O)	cosφ=1	5A/250V
	Locking motor operator	23-24 (NO)	cosφ=1	5A/250V
	Short-circuit protection device	MCB type and size		C/2A
Protection degree				IP20
Operating temperature			°C	-25...+55
Transportation and storage temperature			°C	-40...+70
Max. altitude			m	2000

[1] **Under nominal conditions**

100…160	200…250	315…400	630…800	1250
220 - 240	220 - 240	220 - 240	220 - 240	220 - 240
0.85 - 1.1 x U_e	0.85 - 1.1 x U_e	0.85 - 1.1 x U_e	0.85 - 1.1 x U_e	0.85 - 1.1 x U_e
0.5 - 1.0	0.5 - 1.0	0.5 - 1.2	0.5 - 1.5	0.8 - 2.0
0.3	0.3	0.5	0.9	1.4
1.5	1.5	2.5	4	10
T / 315 / H	T / 315 / H	T / 500 / H	T / 1000 / H	T / 2000 / H
5x20	5x20	5x20	5x20	5x20
1	1	1	1	0.5
10	10	10	10	5
III	III	III	III	
4	4	4	4	
1.5	1.5	1.5	1.5	
100	100	100	100	
PE - N - L	PE - N - L	PE - N - L	PE - N - L	
1.5 - 2.5	1.5 - 2.5	1.5 - 2.5	1.5 - 2.5	1.5 - 2.5
16	16	16	16	16
no SELV	no SELV	no SELV	no SELV	no SELV
1.5 - 2.5	1.5 - 2.5	1.5 - 2.5	1.5 - 2.5	1.5 - 2.5
100	100	100	100	100
no SELV	no SELV	no SELV	no SELV	no SELV
5A/250V	5A/250V	5A/250V	5A/250V	5A/250V
5A/250V	5A/250V	5A/250V	5A/250V	5A/250V
C/2A	C/2A	C/2A	C/2A	C/2A
IP20	IP20	IP20	IP20	IP20
-25…+55	-25…+55	-25…+55	-25…+55	-25…+55
-40…+70	-40…+70	-40…+70	-40…+70	-40…+70
2000	2000	2000	2000	2000

Switch fuses, DIN-types
Ordering information



OS40FD12000 (OS Mini)



OS32G...63GD12P



OS125G...160GD12P



OS32G...63GD03P



OS125G...160GD03P

Front operated switch fuses

Including terminal bolt kit in OS125G...160G, a black ON-OFF plastic handle and shaft as standard. The handle is IP65 protected, padlockable in the OFF-position and with door interlock in the ON-position.The shaft is adjustable for a range of installation depths.

Rated current AC-20…23 ≤ 690V [A]	Rated power AC-23 400/500/690V [kW]	Fuse size	Number of poles	Type	Order number	Units/ type [pcs]	Weight [kg]
Mechanism between the poles							
Protected tunnel terminals, IP20							
40	18.5/22/30	000	3	OS40FD12000	1SCA108914R1001	1	0.8
40	18.5/22/30	000	4	OS40FD22000N1	1SCA108938R1001	1	1.0
32	15/18.5/22	000	2	OS32GD11P	1SCA116703R1001	1	1.0
32	15/18.5/22	000	3	OS32GD12P	1SCA114581R1001	1	1.3
32	15/18.5/22	000	4	OS32GD22N2P	1SCA115202R1001	1	1.6
32	15/18.5/22	000	4	OS32GD22FP	1SCA115205R1001	1	1.6
63	30/37/55	000	2	OS63GD11P	1SCA116711R1001	1	1.0
63	30/37/55	000	3	OS63GD12P	1SCA115227R1001	1	1.3
63	30/37/55	000	4	OS63GD22N2P	1SCA115230R1001	1	1.6
63	30/37/55	000	4	OS63GD22FP	1SCA115232R1001	1	1.6
Terminal bolt kit							
125	55/75/110	000, 00	2	OS125GD11P	1SCA116712R1001	1	1.2
125	55/75/110	000, 00	3	OS125GD12P	1SCA115641R1001	1	1.5
125	55/75/110	000, 00	4	OS125GD22N2P	1SCA115880R1001	1	1.8
125	55/75/110	000, 00	4	OS125GD22FP	1SCA116732R1001	1	1.8
160	75/90/132	000, 00	2	OS160GD11P	1SCA116713R1001	1	1.2
160	75/90/132	000, 00	3	OS160GD12P	1SCA115643R1001	1	1.5
160	75/90/132	000, 00	4	OS160GD22N2P	1SCA115884R1001	1	1.8
160	75/90/132	000, 00	4	OS160GD22FP	1SCA116855R1001	1	1.8
Mechanism at the end of the switch fuse							
Protected tunnel terminals, IP20							
32	15/18.5/22	000	2	OS32GD02P	1SCA116714R1001	1	1.0
32	15/18.5/22	000	3	OS32GD03P	1SCA115189R1001	1	1.3
32	15/18.5/22	000	4	OS32GD04N2P	1SCA115193R1001	1	1.6
32	15/18.5/22	000	4	OS32GD04FP	1SCA115196R1001	1	1.6
63	30/37/55	000	2	OS63GD02P	1SCA116715R1001	1	1.0
63	30/37/55	000	3	OS63GD03P	1SCA115207R1001	1	1.3
63	30/37/55	000	4	OS63GD04N2P	1SCA115209R1001	1	1.6
63	30/37/55	000	4	OS63GD04FP	1SCA115228R1001	1	1.6
Terminal bolt kit							
125	55/75/110	000, 00	2	OS125GD02P	1SCA116716R1001	1	1.2
125	55/75/110	000, 00	3	OS125GD03P	1SCA115639R1001	1	1.5
125	55/75/110	000, 00	4	OS125GD04N2P	1SCA115877R1001	1	1.8
125	55/75/110	000, 00	4	OS125GD04FP	1SCA115686R1001	1	1.8
160	75/90/132	000, 00	2	OS160GD02P	1SCA116717R1001	1	1.2
160	75/90/132	000, 00	3	OS160GD03P	1SCA115399R1001	1	1.5
160	75/90/132	000, 00	4	OS160GD04N2P	1SCA115882R1001	1	1.8
160	75/90/132	000, 00	4	OS160GD04FP	1SCA115402R1001	1	1.8

Shafts and handles included as standard

Suitable for switches	Included shaft	Included handle	Included terminal bolts
OS40_	OXP6X150	OHB65J6	
OS32G_...63G_	OXP6X161	OHB45J6	
OS125G_...160G_	OXP6X161	OHB65J6	M8X25

F = Fused switched neutral
N1 = Non-fused switched neutral on the left side
N2 = Non-fused switched neutral on the right side

Switch fuses, DIN-types
Ordering information

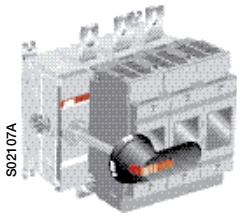
S02107A

OS200D03P


S02109A

OS250D03N3P


S02108A

OS250D04P


S02110A

OS250D22N2P


S01835A

OS400D03P

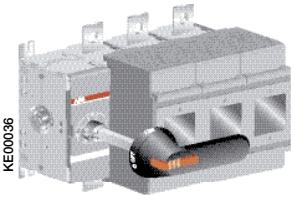
KE00036

OS630D03P


S07076

OS1250D12P

Front operated switch fuses

Incl. terminal bolt kit, a black ON-OFF plastic handle and shaft as standard. The handle is IP65 protected, padlockable in the OFF-position and with door interlock in the ON-position. The shaft is adjustable for a range of installation depths. OS1250DA_: a fuse replacement tool is integrated in the fuse cover.

Rated current AC-20…23 ≤ 690V [A]	Rated power AC-23 400/500/690V [kW]	Number of poles	Fuse size	Type	Order number	Units/ type [pcs]	Weight [kg]
Mechanism between the poles							
200	110/132/200	3	00	OS200DZ12P	1SCA022820R9150	1	3.3
200	110/132/200	2	0	OS200D11P	1SCA022759R9650	1	2.4
200	110/132/200	3	0	OS200D12P	1SCA022721R3050	1	3.3
200	110/132/200	4	0	OS200D22N2P	1SCA022721R3130	1	4.2
250	145/170/250	2	0-1	OS250D11P	1SCA022752R8710	1	3.5
250	145/170/250	3	0-1	OS250D12P	1SCA022726R8380	1	4.3
250	145/170/250	4	0-1	OS250D22N2P	1SCA022726R8460	1	5.1
400	230/280/400	2	0-2	OS400D11P	1SCA110207R1001	1	5.4
400	230/280/400	3	0-2	OS400D12P	1SCA022753R3800	1	7.1
400	230/280/400	4	0-2	OS400D22N2P	1SCA022753R1770	1	9.1
630	355/450/630	2	3	OS630D11P	1SCA116381R1001	1	10.3
630	355/450/630	3	3	OS630D12P	1SCA022825R3810	1	13.6
630	355/450/630	4	3	OS630D22N2P	1SCA022825R4450	1	16.9
800	450/560/710	2	3	OS800D11P	1SCA116655R1001	1	10.3
800	450/560/710	3	3	OS800D12P	1SCA022825R5340	1	13.6
800	450/560/710	4	3	OS800D22N2P	1SCA022825R5510	1	16.9
1250A[1] 1000A[2]	560/710/1000	3	4	OS1250D12P	1SCA105246R1001	1	46
1250A[1] 1000A[2]	560/710/1000	4	4	OS1250D22N2P	1SCA107933R1001	1	55
1250A[1] 1000A[2]	560/710/1000	3	4a	OS1250DA12P	1SCA105241R1001	1	46
1250A[1] 1000A[2]	560/710/1000	4	4a	OS1250DA22N2P	1SCA107935R1001	1	55
Mechanism at the end of the switch fuse							
200	110/132/200	3	00	OS200DZ03P	1SCA022797R3440	1	3.3
200	110/132/200	4	00	OS200DZ04N2P	1SCA022820R9230	1	4.2
200	110/132/200	2	0	OS200D02P	1SCA022759R9220	1	2.4
200	110/132/200	3	0	OS200D03P	1SCA022709R9500	1	3.3
200	110/132/200	3+N	0	OS200D03N3P	1SCA022749R8710	1	3.4
200	110/132/200	4	0	OS200D04N2P	1SCA022709R9680	1	4.2
200	110/132/200	4	0	OS200D04FP	1SCA022725R4750	1	4.2
250	145/170/250	2	0-1	OS250D02P	1SCA022760R0170	1	3.5
250	145/170/250	3	0-1	OS250D03P	1SCA022719R0090	1	4.3
250	145/170/250	3+N	0-1	OS250D03N3P	1SCA022749R9430	1	4.4
250	145/170/250	4	0-1	OS250D04N2P	1SCA022719R2380	1	5.1
250	145/170/250	4	0-1	OS250D04FP	1SCA022726R8620	1	5.1
400	230/280/400	2	0-2	OS400D02P	1SCA022811R2740	1	5.4
400	230/280/400	3	0-2	OS400D03P	1SCA022719R0250	1	7.1
400	230/280/400	3+N	0-2	OS400D03N3P	1SCA022753R9320	1	7.5
400	230/280/400	4	0-2	OS400D04N2P	1SCA022719R2460	1	9.1
400	230/280/400	4	0-2	OS400D04FP	1SCA022753R7110	1	9.1
630	355/450/630	2	3	OS630D02P	1SCA107745R1001	1	10.3
630	355/450/630	3	3	OS630D03P	1SCA022825R2830	1	13.6
630	355/450/630	3+N	3	OS630D03N3P	1SCA100858R1001	1	14.5
630	355/450/630	4	3	OS630D04N2P	1SCA022825R4290	1	16.9
630	355/450/630	4	3	OS630D04FP	1SCA022825R4610	1	16.9
800	450/560/710	2	3	OS800D02P	1SCA022837R2650	1	10.3
800	450/560/710	3	3	OS800D03P	1SCA022825R4880	1	13.6
800	450/560/710	3+N	3	OS800D03N3P	1SCA100859R1001	1	14.5
800	450/560/710	4	3	OS800D04N2P	1SCA022825R5180	1	16.9
800	450/560/710	4	3	OS800D04FP	1SCA022825R5000	1	16.9
1250A[1] 1000A[2]	560/710/1000	2	4	OS1250D02P	1SCA114051R1001	1	37
1250A[1] 1000A[2]	560/710/1000	3	4	OS1250D03P	1SCA105475R1001	1	46
1250A[1] 1000A[2]	560/710/1000	3+N	4	OS1250D03N3P	1SCA107932R1001	1	47
1250A[1] 1000A[2]	560/710/1000	4	4	OS1250D04N2P	1SCA105248R1001	1	55
1250A[1] 1000A[2]	560/710/1000	4	4	OS1250D04FP	1SCA105473R1001	1	55
1250A[1] 1000A[2]	560/710/1000	2	4a	OS1250DA02P	1SCA114059R1001	1	37
1250A[1] 1000A[2]	560/710/1000	3	4a	OS1250DA03P	1SCA105238R1001	1	46
1250A[1] 1000A[2]	560/710/1000	3+N	4a	OS1250DA03N3P	1SCA107934R1001	1	47
1250A[1] 1000A[2]	560/710/1000	4	4a	OS1250DA04N2P	1SCA105243R1001	1	55
1250A[1] 1000A[2]	560/710/1000	4	4a	OS1250DA04FP	1SCA105240R1001	1	55

Shafts and handles included as standard

Suitable for switches	Included shaft	Included handle	Included terminal bolts
OS200_P	OXP6X210	OHB65J6	M8X25
OS250_P	OXP6X210	OHB65J6	M10X30
OS400_P	OXP12X250	OHB95J12	M10X30
OS630...800_P	OXP12X280	OHB145J12	M12X40
OS1250_P	OXP12X395	OHB274J12	M12x50

F = Fused switched neutral, N2 = Non-fused switched neutral on the right side,
N3 = Include a detachable neutral link integrated into the mechanism.

[1] AC-20…22
[2] AC-23

Switch fuses, DIN-types
Ordering information


S07002

OS32G...63GD03K

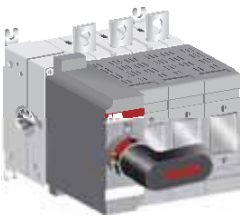
S07003

OS125G...160GD03K


S02013A

OS250D03K

Front operated switch fuses with direct mounted handle

Including a black Test-OFF-ON plastic handle and shaft as standard. The handle is padlockable in the OFF-position. Types OS1250DA_: a fuse replacement tool is integrated in the fuse cover.

Rated current AC-20…23 ≤ 690V [A]	Rated power AC-23 400/500/690V [kW]	Number of poles	Fuse size	Type	Order number	Units/ type [pcs]	Weight [kg]
Protected tunnel terminals, IP20							
32	15/18.5/22	3	000	OS32GD03K	1SCA116733R1001	1	1.3
32	15/18.5/22	4	000	OS32GD04N2K	1SCA116734R1001	1	1.6
32	15/18.5/22	4	000	OS32GD04FK	1SCA116737R1001	1	1.6
63	30/37/55	3	000	OS63GD03K	1SCA116738R1001	1	1.3
63	30/37/55	4	000	OS63GD04N2K	1SCA116876R1001	1	1.6
63	30/37/55	4	000	OS63GD04FK	1SCA116739R1001	1	1.6
Terminal bolt kit							
125	55/75/110	3	000, 00	OS125GD03K	1SCA116878R1001	1	1.5
125	55/75/110	4	000, 00	OS125GD04N2K	1SCA116740R1001	1	1.8
125	55/75/110	4	000, 00	OS125GD04FK	1SCA116741R1001	1	1.8
160	75/90/132	3	000, 00	OS160GD03K	1SCA116742R1001	1	1.5
160	75/90/132	4	000, 00	OS160GD04N2K	1SCA116743R1001	1	1.8
160	75/90/132	4	000, 00	OS160GD04FK	1SCA116880R1001	1	1.8
200	110/132/200	3	0	OS200D03K	1SCA022764R7130	1	3.3
200	110/132/200	4	0	OS200D04N2K	1SCA022768R7430	1	4.2
250	145/170/250	3	0-1	OS250D03K	1SCA022763R6360	1	4.3
250	145/170/250	4	0-1	OS250D04N2K	1SCA022763R6440	1	5.1
400	230/280/400	3	0-2	OS400D03K	1SCA022779R5410	1	7.0
400	230/280/400	4	0-2	OS400D04N2K	1SCA022763R7250	1	9.0
630	355/450/630	3	3	OS630D03K	1SCA108704R1001	1	13
630	355/450/630	4	3	OS630D04N2K	1SCA108705R1001	1	16
800	450/560/710	3	3	OS800D03K	1SCA108725R1001	1	13
800	450/560/710	4	3	OS800D04N2K	1SCA108722R1001	1	16
1250A[1] 1000A[2]	560/710/1000	3	4	OS1250D03K	1SCA108718R1001	1	45
1250A[1] 1000A[2]	560/710/1000	4	4	OS1250D04N2K	1SCA108719R1001	1	54
1250A[1] 1000A[2]	560/710/1000	3	4a	OS1250DA03K	1SCA108720R1001	1	45
1250A[1] 1000A[2]	560/710/1000	4	4a	OS1250DA04N2K	1SCA108721R1001	1	54

Shafts and handles included as standard

Suitable for switches	Included handle and shaft kit	Included terminal bolts
OS32G...63G_K	OSV200BK	-
OS125G...160G_K	OSV200BK	M8X25
OS200_K	OSV250DK	M8X25
OS250_K	OSV250DK	M10X30
OS400_K	OSV400DK	M10X30
OS630...800_K	OSV800DK	M12X40
OS1250_K	OSV1250DK	M12x50

F = Fused fourth pole
N2 = Non-fused switched neutral on the right side

[1] AC-20…22
[2] AC-23

Switch fuses, BS-types
Ordering information

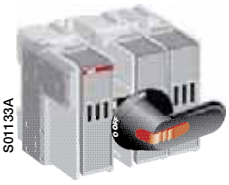

(OS Mini)
OS20...32FB12A1
OS32FB12A2
OS32FB12F1

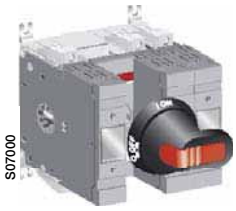

OS32G...63GB12P



OS100G...160GB12P



OS32G...63GB03P

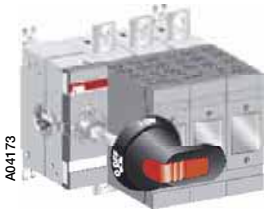

OS100G...160GB03P

Front operated switch fuses

Including terminal bolt kit in OS100G...160G, a black ON-OFF plastic handle and shaft as standard. The handle is IP65 protected, padlockable in the OFF-position and with door interlock in the ON-position. The shaft is adjustable for a range of installation depths.

Rated current AC-20...23 ≤ 690V [A]	Rated power AC-23 415/500/690V [kW]	Fuse size	Number of poles	Type	Order number	Units/ type [pcs]	Weight [kg]
Mechanism between the poles							
Protected tunnel terminals, IP20							
20	7.5/11/15	A1	3	OS20FB12A1	1SCA108790R1001	1	0.7
20	7.5/11/15	A1	4	OS20FB22A1N1	1SCA108796R1001	1	0.9
32	15/18/25	A1	3	OS32FB12A1	1SCA108840R1001	1	0.7
32	15/18/25	A1	4	OS32FB22A1N1	1SCA108853R1001	1	0.9
32	15/18.5/22	A2	3	OS32FB12A2	1SCA108847R1001	1	0.7
32	15/18.5/22	A2	4	OS32FB22A2N1	1SCA108863R1001	1	0.9
32	15/18.5/22	F1	3	OS32FB12F1	1SCA108851R1001	1	0.7
32	15/18.5/22	F1	4	OS32FB22F1N1	1SCA109003R1001	1	0.9
32	15/18.5/22	A2, A3	2	OS32GB11P	1SCA116718R1001	1	1.0
32	15/18.5/22	A2, A3	3	OS32GB12P	1SCA115331R1001	1	1.3
32	15/18.5/22	A2, A3	4	OS32GB22N1P	1SCA115345R1001	1	1.6
63	30/37/55	A2, A3	2	OS63GB11P	1SCA116872R1001	1	1.0
63	30/37/55	A2, A3	3	OS63GB12P	1SCA115325R1001	1	1.3
63	30/37/55	A2, A3	4	OS63GB22N1P	1SCA114601R1001	1	1.6
Terminal bolt kit							
100	55/55/90	A2, A3, A4[1)]	2	OS100GB11P	1SCA116851R1001	1	1.2
100	55/55/90	A2, A3, A4[1)]	3	OS100GB12P	1SCA114586R1001	1	1.5
100	55/55/90	A2, A3, A4[1)]	4	OS100GB22N1P	1SCA114602R1001	1	1.8
125	55/75/110	A2, A3, A4[1)]	2	OS125GB11P	1SCA116853R1001	1	1.2
125	55/75/110	A2, A3, A4[1)]	3	OS125GB12P	1SCA114603R1001	1	1.5
125	55/75/110	A2, A3, A4[1)]	4	OS125GB22N1P	1SCA115903R1001	1	1.8
160	75/90/132	A2, A3, A4[1)]	2	OS160GB11P	1SCA117430R1001	1	1.2
160	75/90/132	A2, A3, A4[1)]	3	OS160GB12P	1SCA115637R1001	1	1.5
160	75/90/132	A2, A3, A4[1)]	4	OS160GB22N1P	1SCA115899R1001	1	1.8
Mechanism at the end of the switch fuse							
Protected tunnel terminals, IP20							
32	15/18.5/22	A2, A3	2	OS32GB02P	1SCA116721R1001	1	1.0
32	15/18.5/22	A2, A3	3	OS32GB03P	1SCA115259R1001	1	1.3
32	15/18.5/22	A2, A3	4	OS32GB04N1P	1SCA114610R1001	1	1.6
63	30/37/55	A2, A3	2	OS63GB02P	1SCA116854R1001	1	1.0
63	30/37/55	A2, A3	3	OS63GB03P	1SCA115235R1001	1	1.3
63	30/37/55	A2, A3	4	OS63GB04N1P	1SCA115238R1001	1	1.6
Terminal bolt kit							
100	55/55/90	A2, A3, A4[1)]	2	OS100GB02P	1SCA116723R1001	1	1.2
100	55/55/90	A2, A3, A4[1)]	3	OS100GB03P	1SCA114613R1001	1	1.5
100	55/55/90	A2, A3, A4[1)]	4	OS100GB04N1P	1SCA114614R1001	1	1.8
125	55/75/110	A2, A3, A4[1)]	2	OS125GB02P	1SCA116724R1001	1	1.2
125	55/75/110	A2, A3, A4[1)]	3	OS125GB03P	1SCA115634R1001	1	1.5
125	55/75/110	A2, A3, A4[1)]	4	OS125GB04N1P	1SCA115901R1001	1	1.8
160	75/90/132	A2, A3, A4[1)]	2	OS160GB02P	1SCA116725R1001	1	1.2
160	75/90/132	A2, A3, A4[1)]	3	OS160GB03P	1SCA115413R1001	1	1.5
160	75/90/132	A2, A3, A4[1)]	4	OS160GB04N1P	1SCA115896R1001	1	1.8

Shafts and handles included as standard

Suitable for switches	Included shaft	Included handle	Included terminal bolts
OS20...32FB_ (OS Mini)	OXP6X150	OHB65J6	
OS32G...63G_P	OXP6X161	OHB45J6	
OS100G...160G_P	OXP6X161	OHB65J6	M8X25

N1 = Non-fused switched neutral on the left side

[1)] Max. fuse diameter 32 mm

Switch fuses, BS -types
Ordering information

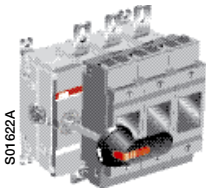
S01622A

OS200B03P

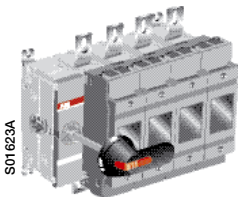
S01623A

OS200B04P

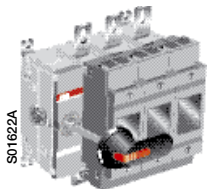
S01622A

OS250B03P

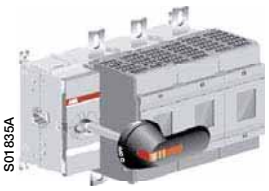
S01835A

OS400B03P

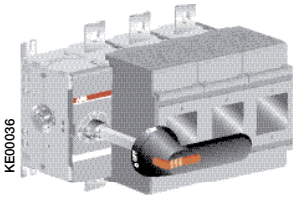
KE00036

OS800B03P


S07075

OS1250B03P

Front operated switch fuses

Including terminal bolt kit, a black ON-OFF plastic handle and shaft as standard. The handle is IP65 protected, padlockable in the OFF-position and with door interlock in the ON-position. The shaft is adjustable for a range of installation depths.

Rated current AC-20...23 ≤ 690V [A]	Rated power AC-23 415/500/690V [kW]	Fuse size	Number of poles	Type	Order number	Units/ type [pcs]	Weight [kg]
Mechanism between the poles							
200	110/132/200	B1-B2	3	OS200B12P	1SCA022721R3210	1	3.3
200	110/132/200	B1-B2	4	OS200B22N2P	1SCA022721R3300	1	4.2
250	145/170/250	B1-B3	3	OS250B12P	1SCA022778R9860	1	4.3
250	145/170/250	B1-B3	4	OS250B22N2P	1SCA022778R9940	1	5.1
315	180/220/315	B1-B4	3	OS315B12P	1SCA022753R2310	1	7.1
315	180/220/315	B1-B4	4	OS315B22N2P	1SCA022753R3390	1	9.1
400	230/280/400	B1-B4	3	OS400B12P	1SCA022753R3470	1	7.1
400	230/280/400	B1-B4	4	OS400B22N2P	1SCA022753R7200	1	9.1
630	355/450/630	C1-C2	3	OS630B12P	1SCA022825R6400	1	13.6
630	355/450/630	C1-C2	4	OS630B22N2P	1SCA022825R6660	1	16.9
800	450/560/710	C1-C3	3	OS800B12P	1SCA022825R8280	1	13.6
800	450/560/710	C1-C3	4	OS800B22N2P	1SCA022825R8440	1	16.9
1250A[1] 1000A[2]	560/710/1000	D1	3	OS1250B12P	1SCA105470R1001	1	46
1250A[1] 1000A[2]	560/710/1000	D1	4	OS1250B22N2P	1SCA107937R1001	1	55
Mechanism at the end of the switch fuse							
200	110/132/200	B1-B2	2	OS200B02P	1SCA022769R7820	1	2.4
200	110/132/200	B1-B2	3	OS200B03P	1SCA022709R9330	1	3.3
200	110/132/200	B1-B2	3+N[3]	OS200B03N3P	1SCA022750R0620	1	3.4
200	110/132/200	B1-B2	4	OS200B04N2P	1SCA022709R9410	1	4.2
250	145/170/250	B1-B3	2	OS250B02P	1SCA022769R9440	1	3.5
250	145/170/250	B1-B3	3	OS250B03P	1SCA022750R6660	1	4.3
250	145/170/250	B1-B3	3+N[3]	OS250B03N3P	1SCA022750R8010	1	4.4
250	145/170/250	B1-B3	4	OS250B04N2P	1SCA022750R7800	1	5.1
315	180/220/315	B1-B4	2	OS315B02P	1SCA022817R3450	1	5.4
315	180/220/315	B1-B4	3	OS315B03P	1SCA022719R0680	1	7.1
315	180/220/315	B1-B4	3+N[3]	OS315B03N3P	1SCA022753R8940	1	7.5
315	180/220/315	B1-B4	4	OS315B04N2P	1SCA022719R2710	1	9.1
400	230/280/400	B1-B4	2	OS400B02P	1SCA022813R7220	1	5.4
400	230/280/400	B1-B4	3	OS400B03P	1SCA022719R0840	1	7.1
400	230/280/400	B1-B4	3+N[3]	OS400B03N3P	1SCA022753R9160	1	7.5
400	230/280/400	B1-B4	4	OS400B04N2P	1SCA022719R2890	1	9.1
630	355/450/630	C1-C2	2	OS630B02P	1SCA113529R1001	1	10.3
630	355/450/630	C1-C2	3	OS630B03P	1SCA022825R5850	1	13.6
630	355/450/630	C1-C2	3+N[3]	OS630B03N3P	1SCA100860R1001	1	14.5
630	355/450/630	C1-C2	4	OS630B04N2P	1SCA022825R6230	1	16.9
800	450/560/710	C1-C3	2	OS800B02P	1SCA022837R6480	1	10.3
800	450/560/710	C1-C3	3	OS800B03P	1SCA022825R7550	1	13.6
800	450/560/710	C1-C3	3+N[3]	OS800B03N3P	1SCA100861R1001	1	14.5
800	450/560/710	C1-C3	4	OS800B04N2P	1SCA022825R8010	1	16.9
1250A[1] 1000A[2]	560/710/1000	D1	2	OS1250B02P	1SCA114070R1001	1	37
1250A[1] 1000A[2]	560/710/1000	D1	3	OS1250B03P	1SCA105250R1001	1	46
1250A[1] 1000A[2]	560/710/1000	D1	3+N[3]	OS1250B03N3P	1SCA107936R1001	1	47
1250A[1] 1000A[2]	560/710/1000	D1	4	OS1250B04N2P	1SCA105469R1001	1	55

Shafts and handles included as standard

Suitable for switches	Included shaft	Included handle	Included terminal bolts
OS200_P	OXP6X210	OHB65J6	M8X25
OS250_P	OXP6X210	OHB65J6	M10X30
OS315...400_P	OXP12X250	OHB95J12	M10X30
OS630...800_P	OXP12X280	OHB145J12	M12X40
OS1250_P	OXP12X395	OHB274J12	M12X50

N2 = Non-fused switched neutral on the right side
N3 = Include a detachable neutral link integrated into the mechanism.

[1] AC-20...22
[2] AC-23
[3] Include a detachable neutral link integrated into the mechanism

Switch fuses, BS-types
Ordering information



OS32G...63GB03K

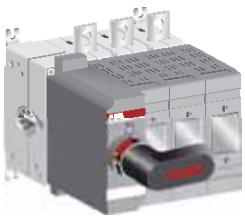

OS100G...160GB03K

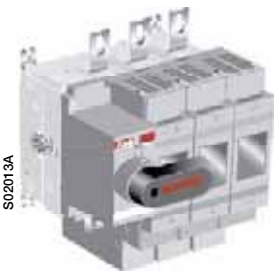

OS250B03K

Front operated switch fuses with direct mounted handle

Including a black Test-OFF-ON plastic handle and shaft as standard. The handle is padlockable in the OFF-position.

Rated current AC-20…23 ≤ 690V [A]	Rated power AC-23 415/500/690V [kW]	Fuse size	Number of poles	Type	Order number	Units/ type [pcs]	Weight [kg]
Protected tunnel terminals, IP20							
32	15/18.5/22	A2, A3	3	OS32GB03K	1SCA116744R1001	1	1.3
32	15/18.5/22	A2, A3	4	OS32GB04N1K	1SCA116856R1001	1	1.6
63	30/37/55	A2, A3	3	OS63GB03K	1SCA116745R1001	1	1.3
63	30/37/55	A2, A3	4	OS63GB04N1K	1SCA116746R1001	1	1.6
Terminal bolt kit							
100	55/55/90	A2, A3, A4[3]	3	OS100GB03K	1SCA116747R1001	1	1.5
100	55/55/90	A2, A3, A4[3]	4	OS100GB04N1K	1SCA116748R1001	1	1.8
125	55/75/110	A2, A3, A4[3]	3	OS125GB03K	1SCA116751R1001	1	1.5
125	55/75/110	A2, A3, A4[3]	4	OS125GB04N1K	1SCA116752R1001	1	1.8
160	75/90/132	A2, A3, A4[3]	3	OS160GB03K	1SCA116753R1001	1	1.5
160	75/90/132	A2, A3, A4[3]	4	OS160GB04N1K	1SCA116754R1001	1	1.8
200	110/132/200	B1-B2	3	OS200B03K	1SCA022763R6950	1	3.3
200	110/132/200	B1-B2	4	OS200B04N2K	1SCA022763R7090	1	4.2
250	145/170/250	B1-B3	3	OS250B03K	1SCA022763R6010	1	4.3
250	145/170/250	B1-B3	4	OS250B04N2K	1SCA022763R6280	1	5.1
315	180/220/315	B1-B4	3	OS315B03K	1SCA022763R6520	1	7.0
315	180/220/315	B1-B4	4	OS315B04N2K	1SCA022763R6610	1	9.0
400	230/280/400	B1-B4	3	OS400B03K	1SCA022763R6790	1	7.0
400	230/280/400	B1-B4	4	OS400B04N2K	1SCA022763R6870	1	9.0
630	355/450/630	C1-C2	3	OS630B03K	1SCA108708R1001	1	13
630	355/450/630	C1-C2	4	OS630B04N2K	1SCA108710R1001	1	16
800	450/560/710	C1-C3	3	OS800B03K	1SCA108713R1001	1	13
800	450/560/710	C1-C3	4	OS800B04N2K	1SCA108714R1001	1	16
1250A[1] 1000A[2]	560/710/1000	D1	3	OS1250B03K	1SCA108715R1001	1	45
1250A[1] 1000A[2]	560/710/1000	D1	4	OS1250B04N2K	1SCA108717R1001	1	54

Shafts and handles included as standard

Suitable for switches	Included handle and shaft kit	Included terminal bolts
OS32G...63G_K	OSV200BK	
OS100G...160G_K	OSV200BK	M8X25
OS200_K	OSV200BK	M8X25
OS250_K	OSV250DK	M10X30
OS315…400_K	OSV400BK	M10X30
OS630...800_K	OSV800DK	M12X40
OS1250_K	OSV1250DK	M12x50

N1 = Non-fused switched neutral on the left side
N2 = Non-fused switched neutral on the right side

[1] AC-20…22
[2] AC-23
[3] Max. fuse diameter 32 mm

Switch fuses, NFC-types
Ordering information


S01133A

(OS Mini)
OS25...32FF1210


S07000

OS50GF12P


S07001

OS125GF12P


A04172

OS50GF03P


A04173

OS125GF03P

Front operated switch fuses

Including terminal bolt kit in OS125G, a black ON-OFF plastic handle and shaft as standard. The handle is IP65 protected, padlockable in the OFF-position and with door interlock in the ON-position. The shaft is adjustable for a range of installation depths.

Rated current AC-20...23 ≤ 690V [A]	Rated power AC-23 400/500/690V [kW]	Fuse size	Number of poles	Type	Order number	Units/ type [pcs]	Weight [kg]
Mechanism between the poles							
Protected tunnel terminals, IP20.							
25	11/15/22	10x38	3	OS25FF1210	1SCA108636R1001	1	0.7
25	11/15/22	10x38	4	OS25FF2210N1	1SCA108638R1001	1	0.9
25	11/15/22	10x38	4	OS25FF2210F	1SCA108637R1001	1	0.9
32	15/18.5/22	14x51	3	OS32FF1214	1SCA108642R1001	1	0.7
32	15/18.5/22	14x51	4	OS32FF2214N1	1SCA108645R1001	1	0.9
32	15/18.5/22	14x51	4	OS32FF2214F	1SCA108643R1001	1	0.9
50	22/30/37	14x51	2	OS50GF11P	1SCA116870R1001	1	1.0
50	22/30/37	14x51	3	OS50GF12P	1SCA115553R1001	1	1.3
50	22/30/37	14x51	4	OS50GF22N1P	1SCA114622R1001	1	1.6
50	22/30/37	14x51	4	OS50GF22FP	1SCA114623R1001	1	1.6
Terminal bolt kit							
125	55/75/110	22x58	2	OS125GF11P	1SCA116726R1001	1	1.2
125	55/75/110	22x58	3	OS125GF12P	1SCA114624R1001	1	1.5
125	55/75/110	22x58	4	OS125GF22N1P	1SCA115893R1001	1	1.8
125	55/75/110	22x58	4	OS125GF22FP	1SCA115614R1001	1	1.8
Mechanism at the end of the switch fuse							
Protected tunnel terminals, IP20							
50	22/30/37	14x51	2	OS50GF02P	1SCA118345R1001	1	1.0
50	22/30/37	14x51	3	OS50GF03P	1SCA115492R1001	1	1.3
50	22/30/37	14x51	4	OS50GF04N1P	1SCA115495R1001	1	1.6
50	22/30/37	14x51	4	OS50GF04FP	1SCA115498R1001	1	1.6
Terminal bolt kit							
125	55/75/110	22x58	2	OS125GF02P	1SCA116727R1001	1	1.2
125	55/75/110	22x58	3	OS125GF03P	1SCA115602R1001	1	1.5
125	55/75/110	22x58	4	OS125GF04N1P	1SCA115888R1001	1	1.8
125	55/75/110	22x58	4	OS125GF04FP	1SCA115606R1001	1	1.8

Shafts and handles included as standard

Suitable for switches	Included shaft	Included handle	Included terminal bolts
OS25…32_	OXP6X150	OHB65J6	
OS50G_P	OXP6X161	OHB45J6	
OS125G_P	OXP6X161	OHB65J6	M8X25

F = Fused switched neutral
N1 = Non-fused switched neutral on the left side

Switch fuses, Neozed, UL- and CSA-types
Ordering information



(OS Mini)
OS16...35FD12_



(OS Mini)
OS30FA_

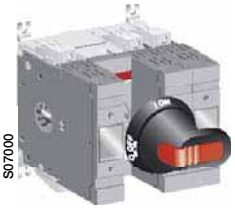

OS60GJ12P

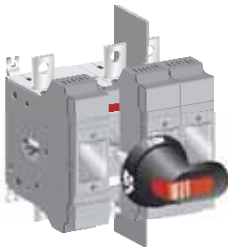

OS100GJ12P



OS60GJ03P

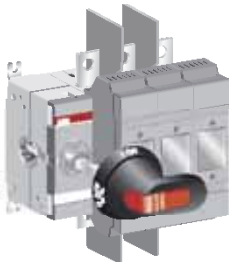

OS100GJ03P

Front operated switch fuses, Neozed -types

Including a black ON-OFF plastic handle and shaft as standard. The handle is IP65 protected, padlockable in the OFF-position and with door interlock in the ON-position. The shaft is adjustable for a range of installation depths.

Rated current AC-20...23 ≤ 690V [A]	Rated power AC-23 400/500/690V [kW]	Fuse size	Number of poles	Type	Order number	Units/ type [pcs]	Weight [kg]
Mechanism between the poles							
Protected tunnel terminals, IP20.							
16	7.5/7.5/11	DO1[1)]	3	OS16FD1201	1SCA108788R1001	1	0.7
16	7.5/7.5/11	DO1[1)]	4	OS16FD2201N1	1SCA108789R1001	1	0.9
16	7.5/7.5/11	DO1[1)]	4	OS16FD2201F	1SCA108993R1001	1	0.9
35	15/22/30	DO2[1)]	3	OS35FD1202	1SCA108908R1001	1	0.7
35	15/22/30	DO2[1)]	4	OS35FD2202N1	1SCA108911R1001	1	0.9
35	15/22/30	DO2[1)]	4	OS35FD2202F	1SCA109008R1001	1	0.9

Front operated fusible disconnect switches, UL- and CSA-types

Including terminal bolt set (OS100G), a black ON-OFF plastic handle and shaft as standard.
The handle is IP65, NEMA 1, 3R, 12 protected, padlockable in the OFF-position and with door interlock in the ON-position.
The shaft is adjustable for a range of installation depths. Fuse standard UL 248.

Ampere rating [A]	Horse power ratings 3 phase 240/480/600V [HP]	Fuse type, size	Number of poles	Type	Order number	Units/ type [pcs]	Weight [kg]
Mechanism between the poles							
Protected tunnel terminals, IP20, cable size 0.5…10 mm^2, (AWG 18 - 8).							
30	7.5/15/20	CC, 30A	3	OS30FACC12P	1SCA108817R1001	1	0.7
30	7.5/15/20	CC, 30A	4	OS30FACC22FP	1SCA108821R1001	1	0.9
30	7.5/15/20	J, 30A	3	OS30FAJ12P	1SCA108828R1001	1	0.7
30	7.5/15/20	J, 30A	4	OS30FAJ22FP	1SCA108831R1001	1	0.9
Protected tunnel terminals, IP20, cable size 2.5…25 mm^2 (AWG 14 - 4).[2)]							
60	15/30/50	J, 60A	3	OS60GJ12P	1SCA115449R1001	1	1.3
60	15/30/50	J, 60A	4	OS60GJ22N1P	1SCA116735R1001	1	1.6
60	15/30/50	J, 60A	4	OS60GJ22FP	1SCA115469R1001	1	1.6
Terminal bolt kit							
100	30/60/75	J, 100A	3	OS100GJ12P	1SCA115666R1001	1	1.5
100	30/60/75	J, 100A	4	OS100GJ22N1P	1SCA115910R1001	1	1.8
100	30/60/75	J, 100A	4	OS100GJ22FP	1SCA114636R1001	1	1.8
Mechanism at the end of the switch fuse							
Protected tunnel terminals, IP20, cable size 2.5…25 mm^2 (AWG 14 - 4).[2)]							
60	15/30/50	J, 60A	3	OS60GJ03P	1SCA115443R1001	1	1.3
60	15/30/50	J, 60A	4	OS60GJ04N1P	1SCA116736R1001	1	1.6
60	15/30/50	J, 60A	4	OS60GJ04FP	1SCA115446R1001	1	1.6
Terminal bolt kit							
100	30/60/75	J, 100A	3	OS100GJ03P	1SCA114639R1001	1	1.5
100	30/60/75	J, 100A	4	OS100GJ04N1P	1SCA115909R1001	1	1.8
100	30/60/75	J, 100A	4	OS100GJ04FP	1SCA115439R1001	1	1.8

Shafts and handles included as standard

Suitable for switches	Included shaft	Included handle	Included terminal bolts
OS16…35FD_	OXP6X150	OHB65J6	
OS30FA_	OXP6X150	OHB65J6	
OS60G_P	OXP6X161	OHB45J6	
OS100G_P	OXP6X161	OHB65J6	M8X25

F = Fused switched neutral
N1 = Non-fused switched neutral on the left side

[1)] **Use DO2 adapter rings.**
[2)] **Approval pending**

Switch fuses, UL- and CSA-types
Ordering information

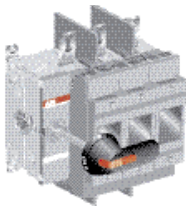
S02160A

OS200J03_


S01835A

OS400J03_

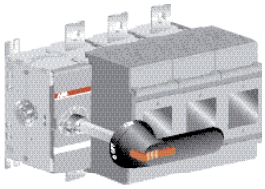
KE00036

OS600...800J/L03_


S07077

OS1200L03_

Front operated fusible disconnect switches

Including terminal bolt kit, a black ON-OFF plastic handle and shaft as standard. The handle is IP65, NEMA 1, 3R, 12 protected, padlockable in the OFF-position and with door interlock in the ON-position. The shaft is adjustable for a range of installation depths. Fuse standards UL 248.

Ampere rating [A]	Horsepower rating, [HP] 240/480/600V	Fuse type	Number of poles	Type [1]	Order number	Units/ type [pcs]	Weight [kg]
200	60/125/150	J/200A	2	OS200J02P	1SCA107598R1001	1	2.4
200	60/125/150	J/200A	3	OS200J03P	1SCA022709R9760	1	3.3
200	60/125/150	J/200A	4	OS200J04FP	1SCA022758R9770	1	4.2
400	125/250/350	J/400A	2	OS400J02P	1SCA107596R1001	1	5.6
400	125/250/350	J/400A	3	OS400J03P	1SCA022719R1140	1	7.3
400	125/250/350	J/400A	4	OS400J04FP	1SCA022755R3740	1	9.3
600	200/400/500	J/600A	2	OS600J02P	1SCA107595R1001	1	10.3
600	200/400/500	J/600A	3	OS600J03P	1SCA022825R8870	1	13.6
600	200/400/500	J/600A	4	OS600J04FP	1SCA022839R4030	1	16.9
800	250/500/500	L/800A	2	OS800L02P	1SCA116921R1001	1	10.3
800	250/500/500	L/800A	3	OS800L03P	1SCA022825R9920	1	13.6
800	250/500/500	L/800A	4	OS800L04FP	1SCA022839R5430	1	16.9
1200	60/125/150	L/1200A	2	OS1200L02P	1SCA116925R1001	1	37
1200	60/125/150	L/1200A	3	OS1200L03P	1SCA105468R1001	1	46
1200	60/125/150	L/1200A	4	OS1200L04FP	1SCA105466R1001	1	55

Shafts and handles included as standard

Suitable for switches	Included shaft	Included handle	Included terminal bolts
OS200	OXP6X210	OHB65J6	M8X25
OS400	OXP12X250	OHB95J12	M10X30
OS600...800	OXP12X280	OHB145J12	M12X40
OS1200	OXP12X395	OHB274J12	M12X50

[1] Information on CSA and UL approval on request.

Switch fuses, DIN-types
Ordering information

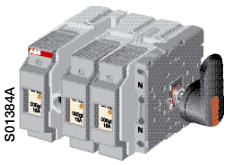

(OS Mini)
OS40FDS_

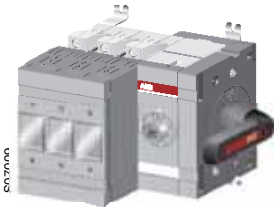

OS32G_...63GDS30K

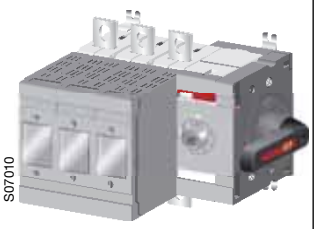

OS100G_...160GDS30K

Side operated switch fuses

Including terminal bolt kit (OS125G...160G), a black ON-OFF plastic handle and shaft as standard. The handle is IP65 protected, padlockable in the OFF-position and with door interlock in the ON-position. The shaft is adjustable for a range of installation depths.

Rated current AC-20...23 ≤ 690V [A]	Rated power AC-23 400/500/690V [kW]	Fuse size	Number of poles	Type	Order number	Units/ type [pcs]	Weight [kg]
Shaft mounting depths measured from the left side of the switch, 3-pole: H=157…164 mm and 4-pole: H= 193…200 mm. Protected tunnel terminals, IP20.							
40	18.5/22/30	000	3	OS40FDS30000	1SCA108942R1001	1	0.9
40	18.5/22/30	000	3[1)]	OS40FDS30000-N	1SCA109012R1001	1	0.9
40	18.5/22/30	000	4	OS40FDS40000N1	1SCA108954R1001	1	1.1

Side operated switch fuses without handle

Protected tunnel terminals, IP20.							
32	15/18.5/22	000	3	OS32GDS30	1SCA115963R1001	1	1.3
32	15/18.5/22	000	4	OS32GDS40N2	1SCA116046R1001	1	1.6
32	15/18.5/22	000	4	OS32GDS40F	1SCA116755R1001	1	1.6
63	30/37/55	000	3	OS63GDS30	1SCA116007R1001	1	1.3
63	30/37/55	000	4	OS63GDS40N2	1SCA116047R1001	1	1.6
63	30/37/55	000	4	OS63GDS40F	1SCA116877R1001	1	1.6
Terminal bolt kit							
125	55/75/110	000, 00	3	OS125GDS30	1SCA115966R1001	1	1.5
125	55/75/110	000, 00	4	OS125GDS40N2	1SCA115967R1001	1	1.8
125	55/75/110	000, 00	4	OS125GDS40F	1SCA116756R1001	1	1.8
160	75/90/132	000, 00	3	OS160GDS30	1SCA115968R1001	1	1.5
160	75/90/132	000, 00	4	OS160GDS40N2	1SCA115969R1001	1	1.8
160	75/90/132	000, 00	4	OS160GDS40F	1SCA116757R1001	1	1.8

Side operated switch fuses with direct mounted handle

Including a black Test-ON-OFF plastic handle and shaft as standard. The handle is padlockable in the OFF-position.

Protected tunnel terminals, IP20.							
32	15/18.5/22	000	3	OS32GDS30K	1SCA115929R1001	1	1.3
32	15/18.5/22	000	4	OS32GDS40N1K	1SCA115930R1001	1	1.6
32	15/18.5/22	000	4	OS32GDS40N2K	1SCA116402R1001	1	1.6
63	30/37/55	000	3	OS63GDS30K	1SCA115931R1001	1	1.3
63	30/37/55	000	4	OS63GDS40N1K	1SCA115932R1001	1	1.6
63	30/37/55	000	4	OS63GDS40N2K	1SCA116403R1001	1	1.6
Terminal bolt kit							
125	55/75/110	000, 00	3	OS125GDS30K	1SCA115933R1001	1	1.5
125	55/75/110	000, 00	4	OS125GDS40N2K	1SCA115934R1001	1	1.8
160	75/90/132	000, 00	3	OS160GDS30K	1SCA115935R1001	1	1.5
160	75/90/132	000, 00	4	OS160GDS40N2K	1SCA115939R1001	1	1.8

Shafts and handles included as standard

Suitable for switches	Included shaft	Included handle	Included terminal bolts
OS40FDS_	OXP6X70-V0	OHB65J6	
OS32G_S_K...63G_S_K	OXP6X42-TO	OHB65D6	
OS125G_S_K...160G_S_K	OXP6X42-TO	OHB65D6	M8X25

F = Fused switched neutral
N1 = Non-fused switched neutral on the left side
N2 = Non-fused switched neutral on the right side

[1)] Detachable neutral link

Switch fuses, DIN-types
Ordering information

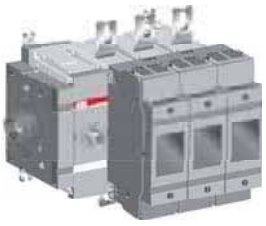
KE00074

OS200DS03


KE00075

OS200DS03K

Side operated switch fuses without handle

Including terminal bolt kit. The handle and shaft have to be ordered separately.

Rated current AC-20...23 ≤ 690V [A]	Rated power AC-23 400/500/690V [kW]	Fuse size	Number of poles	Type	Order number	Units/ type [pcs]	Weight [kg]
200	110/132/200	0	3	OS200DS03	1SCA022871R0720	1	3.5
200	110/132/200	0	3	OS200DS30	1SCA022871R1370	1	3.5
200	110/132/200	0	4	OS200DS04F	1SCA022871R0990	1	4.4
200	110/132/200	0	4	OS200DS40F	1SCA022871R1530	1	4.4
250	145/170/250	0-1	3	OS250DS03	1SCA022860R3050	1	4.5
250	145/170/250	0-1	3	OS250DS30	1SCA022871R2180	1	4.5
250	145/170/250	0-1	4	OS250DS04F	1SCA022860R3210	1	5.3
250	145/170/250	0-1	4	OS250DS40F	1SCA022871R2340	1	5.3
400	230/280/400	0-2	3	OS400DS03	1SCA022860R3480	1	7.3
400	230/280/400	0-2	3	OS400DS30	1SCA022871R2850	1	7.3
400	230/280/400	0-2	4	OS400DS04F	1SCA022860R3640	1	9.3
400	230/280/400	0-2	4	OS400DS40F	1SCA022871R3070	1	9.3
630	355/450/630	3	3	OS630DS03	1SCA108128R1001	1	13.9
630	355/450/630	3	3	OS630DS30	1SCA108135R1001	1	13.9
630	355/450/630	3	4	OS630DS04F	1SCA108131R1001	1	16.8
630	355/450/630	3	4	OS630DS40F	1SCA108137R1001	1	16.8
800	450/560/710	3	3	OS800DS03	1SCA108092R1001	1	13.9
800	450/560/710	3	3	OS800DS30	1SCA108098R1001	1	13.9
800	450/560/710	3	4	OS800DS04F	1SCA108094R1001	1	16.8
800	450/560/710	3	4	OS800DS40F	1SCA108100R1001	1	16.8

Side operated switch fuses with direct mounted handle

Including terminal bolt kit, a black Test-ON-OFF plastic handle and shaft as standard. The handle is padlockable in the OFF-position.

Rated current AC-20...23 ≤ 690V [A]	Rated power AC-23 400/500/690V [kW]	Fuse size	Number of poles	Type	Order number	Units/ type [pcs]	Weight [kg]
200	110/132/200	0	3	OS200DS03K	1SCA022871R0810	1	3.6
200	110/132/200	0	3	OS200DS30K	1SCA022871R1450	1	3.6
200	110/132/200	0	4	OS200DS04FK	1SCA022871R1020	1	4.5
200	110/132/200	0	4	OS200DS40FK	1SCA022871R1610	1	4.5
250	145/170/250	0-1	3	OS250DS03K	1SCA022860R3130	1	4.6
250	145/170/250	0-1	3	OS250DS30K	1SCA022871R2260	1	4.6
250	145/170/250	0-1	4	OS250DS04FK	1SCA022860R3300	1	5.4
250	145/170/250	0-1	4	OS250DS40FK	1SCA022871R2420	1	5.4
400	230/280/400	0-2	3	OS400DS03K	1SCA022860R3560	1	7.5
400	230/280/400	0-2	3	OS400DS30K	1SCA022871R2930	1	7.5
400	230/280/400	0-2	4	OS400DS04FK	1SCA022860R3720	1	9.5
400	230/280/400	0-2	4	OS400DS40FK	1SCA022871R3150	1	9.5
630	355/450/630	3	3	OS630DS03K	1SCA108129R1001	1	14.1
630	355/450/630	3	3	OS630DS30K	1SCA108136R1001	1	14.1
630	355/450/630	3	4	OS630DS04FK	1SCA108132R1001	1	17
630	355/450/630	3	4	OS630DS40FK	1SCA108138R1001	1	17
800	450/560/710	3	3	OS800DS03K	1SCA108093R1001	1	14.1
800	450/560/710	3	3	OS800DS30K	1SCA108093R1001	1	14.1
800	450/560/710	3	4	OS800DS04FK	1SCA108095R1001	1	17
800	450/560/710	3	4	OS800DS40FK	1SCA108101R1001	1	17

Shafts and handles included as standard (in -K types):

Suitable for switches	Included shaft	Included handle	Included terminal bolts
OS200	OXP6X42-TO	OHB65D6	M8x25
OS250	OXP6X42-TO	OHB65D6	M10x30
OS315...400	OXP12X47-TO	OHB95D12	M10x30
OS630…800	OXP12X59-TO	OHB145D12	M12x40

F = Fused switched neutral

Switch fuses, BS-types
Ordering information


S01146A

(OSMini)
OS20...32FBS30A1
OS32FBS30A2
OS32FBS30F1


S07009

OS32G_...63GBS30K

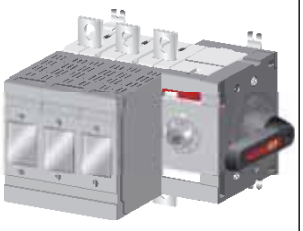
S07010

OS100G_...160GBS30K

Side operated switch fuses

Including terminal bolt kit (OS100G...160G), a black ON-OFF plastic handle and shaft as standard. The handle is IP65 protected, padlockable in the OFF-position and with door interlock in the ON-position. The shaft is adjustable for a range of installation depths.

Rated current AC-20...23 ≤ 690V [A]	Rated power AC-23 415/500/690V [kW]	Fuse size	Number of poles	Type	Order number	Units/ type [pcs]	Weight [kg]
Shaft mounting depths measured from the left side of the switch, 3-pole:H=154…166 mm and 4-pole: H= 189…201 mm. Protected tunnel terminals, IP20.							
20	7.5/11/15	A1	3	OS20FBS30A1	1SCA108997R1001	1	0.7
20	7.5/11/15	A1	4	OS20FBS40A1N1	1SCA108998R1001	1	0.9
32	15/18.5/22	A1	3	OS32FBS30A1	1SCA108877R1001	1	0.7
32	15/18.5/22	A1	4	OS32FBS40A1N1	1SCA109006R1001	1	0.9
32	15/18.5/22	A2	3	OS32FBS30A2	1SCA108882R1001	1	0.7
32	15/18.5/22	A2	4	OS32FBS40A2N1	1SCA109007R1001	1	0.9
32	15/18.5/22	F1	3	OS32FBS30F1	1SCA109004R1001	1	0.7
32	15/18.5/22	F1	4	OS32FBS40F1N1	1SCA109005R1001	1	0.9

Side operated switch fuses without handle

Protected tunnel terminals, IP20.							
32	15/18.5/22	A2, A3	3	OS32GBS30	1SCA115955R1001	1	1.3
32	15/18.5/22	A2, A3	4	OS32GBS40N1	1SCA115956R1001	1	1.6
63	30/37/55	A2, A3	3	OS63GBS30	1SCA115957R1001	1	1.3
63	30/37/55	A2, A3	4	OS63GBS40N1	1SCA115978R1001	1	1.6
Terminal bolt kit							
100	55/55/90	A2, A3, A4[1)]	3	OS100GBS30	1SCA116758R1001	1	1.5
100	55/55/90	A2, A3, A4[1)]	4	OS100GBS40N1	1SCA116759R1001	1	1.8
100	55/55/90	A2, A3, A4[1)]	4	OS100GBS40N2	1SCA116760R1001	1	1.8
125	55/75/110	A2, A3, A4[1)]	3	OS125GBS30	1SCA116048R1001		1.5
125	55/75/110	A2, A3, A4[1)]	4	OS125GBS40N1	1SCA115959R1001	1	1.8
125	55/75/110	A2, A3, A4[1)]	4	OS125GBS40N2	1SCA116761R1001	1	1.8
160	75/90/132	A2, A3, A4[1)]	3	OS160GBS30	1SCA115960R1001	1	1.5
160	75/90/132	A2, A3, A4[1)]	4	OS160GBS40N1	1SCA115961R1001	1	1.8
160	75/90/132	A2, A3, A4[1)]	4	OS160GBS40N2	1SCA116762R1001	1	1.8

Side operated switch fuses with direct mounted handle

Including a black Test-ON-OFF plastic handle and shaft as standard. The handle is padlockable in the OFF-position.

Protected tunnel terminals, IP20.							
32	15/18.5/22	A2, A3	3	OS32GBS30K	1SCA115918R1001	1	1.3
32	15/18.5/22	A2, A3	4	OS32GBS40N1K	1SCA115923R1001	1	1.6
63	30/37/55	A2, A3	3	OS63GBS30K	1SCA115924R1001	1	1.3
63	30/37/55	A2, A3	4	OS63GBS40N1K	1SCA115979R1001	1	1.6
Terminal bolt kit							
125	55/75/110	A2, A3, A4[1)]	3	OS125GBS30K	1SCA116400R1001	1	1.5
125	55/75/110	A2, A3, A4[1)]	4	OS125GBS40N1K	1SCA115926R1001	1	1.8
160	75/90/132	A2, A3, A4[1)]	3	OS160GBS30K	1SCA115927R1001	1	1.5
160	75/90/132	A2, A3, A4[1)]	4	OS160GBS40N1K	1SCA115928R1001	1	1.8

Shafts and handles included as standard

Suitable for switches	Included shaft	Included handle	Included terminal bolts
OS20F_S...32F_S (OS Mini)	OXP6X70-V0	OHB65J6	
OS32G_S_K...63G_S_K	OXP6X42-TO	OHB65D6	
OS125G_S_K...160G_S_K	OXP6X42-TO	OHB65D6	M8X25

N1 = Non-fused switched neutral on the left side
N2 = Non-fused switched neutral on the right side

[1)] Max. diameter 32 mm

Switch fuses, BS-types
Ordering information


KE00074

OS200BS03


KE00075

OS200BS03K

Side operated switch fuses without handle

Including terminal bolt kit. The handle and shaft have to be ordered separately.

Rated current AC-20...23 ≤ 690V [A]	Rated power AC-23 415/500/690V [kW]	Fuse size	Number of poles	Type	Order number	Units/ type [pcs]	Weight [kg]
200	110/132/200	B1-B2	3	OS200BS03	1SCA022860R3810	1	3.5
200	110/132/200	B1-B2	3	OS200BS30	1SCA022870R7770	1	3.5
200	110/132/200	B1-B2	4	OS200BS04N2	1SCA022870R7510	1	4.4
200	110/132/200	B1-B2	4	OS200BS40N2	1SCA022870R8150	1	4.4
250	145/170/250	B1-B3	3	OS250BS03	1SCA022860R4370	1	4.5
250	145/170/250	B1-B3	3	OS250BS30	1SCA022870R8580	1	4.5
250	145/170/250	B1-B3	4	OS250BS04N2	1SCA022870R8310	1	5.3
250	145/170/250	B1-B3	4	OS250BS40N2	1SCA022870R8910	1	5.3
315	180/220/315	B1-B4	3	OS315BS03	1SCA022860R4700	1	7.3
315	180/220/315	B1-B4	3	OS315BS30	1SCA022870R9390	1	7.3
315	180/220/315	B1-B4	4	OS315BS04N2	1SCA022870R9120	1	9.3
315	180/220/315	B1-B4	4	OS315BS40N2	1SCA022870R9710	1	9.3
400	230/280/400	B1-B4	3	OS400BS03	1SCA022860R5180	1	7.3
400	230/280/400	B1-B4	3	OS400BS30	1SCA022871R0130	1	7.3
400	230/280/400	B1-B4	4	OS400BS04N2	1SCA022870R9980	1	9.3
400	230/280/400	B1-B4	4	OS400BS40N2	1SCA022871R0560	1	9.3
630	355/450/630	C1-C2	3	OS630BS03	1SCA108141R1001	1	13.9
630	355/450/630	C1-C2	3	OS630BS30	1SCA108147R1001	1	13.9
630	355/450/630	C1-C2	4	OS630BS04N2	1SCA108145R1001	1	16.8
630	355/450/630	C1-C2	4	OS630BS40N2	1SCA108152R1001	1	16.8
800	450/560/710	C1-C3	3	OS800BS03	1SCA108076R1001	1	13.9
800	450/560/710	C1-C3	3	OS800BS30	1SCA108083R1001	1	13.9
800	450/560/710	C1-C3	4	OS800BS04N2	1SCA108081R1001	1	16.8
800	450/560/710	C1-C3	4	OS800BS40N2	1SCA108086R1001	1	16.8

Side operated switch fuses with direct mounted handle

Including terminal bolt kit, a black Test-ON-OFF plastic handle and shaft as standard. The handle is padlockable in the OFF-position.

Rated current AC-20...23 ≤ 690V [A]	Rated power AC-23 415/500/690V [kW]	Fuse size	Number of poles	Type	Order number	Units/ type [pcs]	Weight [kg]
200	110/132/200	B1-B2	3	OS200BS03K	1SCA022860R3990	1	3.6
200	110/132/200	B1-B2	3	OS200BS30K	1SCA022870R7850	1	3.6
200	110/132/200	B1-B2	4	OS200BS04N2K	1SCA022870R7690	1	4.5
200	110/132/200	B1-B2	4	OS200BS40N2K	1SCA022870R8230	1	4.5
250	145/170/250	B1-B3	3	OS250BS03K	1SCA022860R4450	1	4.6
250	145/170/250	B1-B3	3	OS250BS30K	1SCA022870R8660	1	4.6
250	145/170/250	B1-B3	4	OS250BS04N2K	1SCA022870R8400	1	5.4
250	145/170/250	B1-B3	4	OS250BS40N2K	1SCA022870R9040	1	5.4
315	180/220/315	B1-B4	3	OS315BS03K	1SCA022860R4880	1	7.5
315	180/220/315	B1-B4	3	OS315BS30K	1SCA022870R9470	1	7.5
315	180/220/315	B1-B4	4	OS315BS04N2K	1SCA022870R9210	1	9.5
315	180/220/315	B1-B4	4	OS315BS40N2K	1SCA022870R9800	1	9.5
400	230/280/400	B1-B4	3	OS400BS03K	1SCA022860R5260	1	7.5
400	230/280/400	B1-B4	3	OS400BS30K	1SCA022871R0210	1	7.5
400	230/280/400	B1-B4	4	OS400BS04N2K	1SCA022871R0050	1	9.5
400	230/280/400	B1-B4	4	OS400BS40N2K	1SCA022871R0640	1	9.5
630	355/450/630	C1-C2	3	OS630BS03K	1SCA108142R1001	1	14.1
630	355/450/630	C1-C2	3	OS630BS30K	1SCA108148R1001	1	14.1
630	355/450/630	C1-C2	4	OS630BS04N2K	1SCA108146R1001	1	17
630	355/450/630	C1-C2	4	OS630BS40N2K	1SCA108151R1001	1	17
800	450/560/710	C1-C3	3	OS800BS03K	1SCA108077R1001	1	14.1
800	450/560/710	C1-C3	3	OS800BS30K	1SCA108084R1001	1	14.1
800	450/560/710	C1-C3	4	OS800BS04N2K	1SCA108082R1001	1	17
800	450/560/710	C1-C3	4	OS800BS40N2K	1SCA108087R1001	1	17

Shafts and handles included as standard (in -K types):

Suitable for switches	Included shaft	Included handle	Included terminal bolts
OS200	OXP6X42-TO	OHB65D6	M8x25
OS250	OXP6X42-TO	OHB65D6	M10x30
OS315...400	OXP12X47-TO	OHB95D12	M10x30
OS630...800	OXP12X59-TO	OHB145D12	M12x40

N2 = Non-fused switched neutral on the right side

Switch fuses, NFC-types
Ordering information



(OSMini)
OS25...32FFS30_

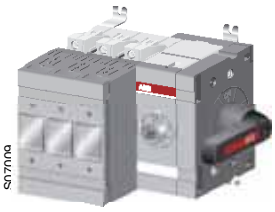

OS50GFS30K

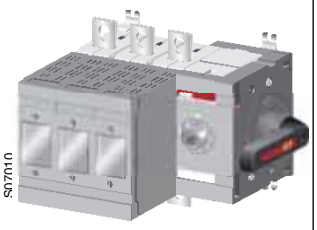

OS125GFS30K

Side operated switch fuses

Including terminal bolt kit (OS125G), a black ON-OFF plastic handle and shaft as standard. The handle is IP65 protected, Nema type 1, 3R, 12, padlockable in the OFF-position and with door interlock in the ON-position. The shaft is adjustable for a range of installation depths.

Rated current AC-20...23 ≤ 690V [A]	Rated power AC-23 400/500/690V [kW]	Fuse size	Number of poles	Type	Order number	Units/ type [pcs]	Weight [kg]
Shaft mounting depths measured from the left side of the switch, 3-pole: H=154…166 mm and 4 pole: H=189…201 mm. Protected tunnel terminals, IP20.							
25	11/15/22	10x38	3	OS25FFS3010	1SCA108639R1001	1	0.7
25	11/15/22	10x38	4	OS25FFS4010N1	1SCA108661R1001	1	0.9
25	11/15/22	10x38	4	OS25FFS4010F	1SCA108640R1001	1	0.9
32	15/18.5/22	14x51	3	OS32FFS3014	1SCA108646R1001	1	0.7
32	15/18.5/22	14x51	4	OS32FFS4014N1	1SCA108649R1001	1	0.9
32	15/18.5/22	14x51	4	OS32FFS4014F	1SCA108647R1001	1	0.9

Side operated switch fuses without handle

Protected tunnel terminals, IP20.							
50	22/30/37	14x51	3	OS50GFS30	1SCA116050R1001	1	1.3
50	22/30/37	14x51	4	OS50GFS40N1	1SCA116058R1001	1	1.6
50	22/30/37	14x51	4	OS50GFS40F	1SCA116014R1001	1	1.6
Terminal bolt kit							
125	55/75/110	22x58	3	OS125GFS30	1SCA115973R1001	1	1.5
125	55/75/110	22x58	4	OS125GFS40N1	1SCA115974R1001	1	1.8
125	55/75/110	22x58	4	OS125GFS40F	1SCA115975R1001	1	1.8

Side operated switch fuses with direct mounted handle

Including a black Test-ON-OFF plastic handle and shaft as standard. The handle is padlockable in the OFF-position.

Protected tunnel terminals, IP20.							
50	22/30/37	14x51	3	OS50GFS30K	1SCA116404R1001	1	1.3
50	22/30/37	14x51	4	OS50GFS40N1K	1SCA116013R1001	1	1.6
50	22/30/37	14x51	4	OS50GFS40FK	1SCA116425R1001	1	1.6
Terminal bolt kit							
125	55/75/110	22x58	3	OS125GFS30K	1SCA115944R1001	1	1.5
125	55/75/110	22x58	4	OS125GFS40N1K	1SCA115945R1001	1	1.8
125	55/75/110	22x58	4	OS125GFS40FK	1SCA115946R1001	1	1.8

Shafts and handles included as standard

Suitable for switches	Included shaft	Included handle	Included terminal bolts
OS25F_S...32F_S (OS Mini)	OXP6X70-V0	OHB65J6	
OS50GFS_K	OXP6X42-TO	OHB65D6	
OS125GFS_K	OXP6X42-TO	OHB65D6	M8X25

F = Fused switched neutral
N1 = Non-fused switched neutral on the left side

Switch fuses, Neozed, UL- and CSA-types
Ordering information



(OSMini)
OS16...35FDS30_



(OSMini)
OS30FA_

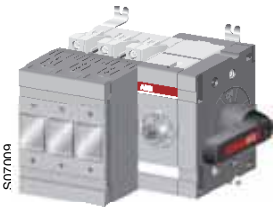

OS60GJS30K

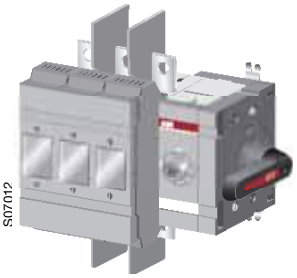

OS100GJS30K

Side operated switch fuses, Neozed-types

Including a handle and shaft as standard. The handle is IP65 protected, padlockable in the OFF-position and with door interlock in the ON-position. The shaft is adjustable for a range of installation depths.

Rated current AC-20...23 ≤ 690V [A]	Rated power AC-23 400/500/690V [kW]	Fuse size	Number of poles	Type	Order number	Units/ type [pcs]	Weight [kg]
Shaft mounting depths measured from the left side of the switch, 3-pole: H=154…166 mm and 4-pole: H=189…201 mm. Protected tunnel terminals, IP20.							
16	7.5/7.5/11	DO 1[1]	3	OS16FDS3001	1SCA108994R1001	1	0.7
16	7.5/7.5/11	DO 1[1]	4	OS16FDS4001N1	1SCA108995R1001	1	0.9
16	7.5/7.5/11	DO 1[1]	4	OS16FDS4001F	1SCA108996R1001	1	0.9
35	15/22/30	DO 2	3	OS35FDS3002	1SCA109009R1001	1	0.7
35	15/22/30	DO 2	4	OS35FDS4002N1	1SCA109010R1001	1	0.9
35	15/22/30	DO 2	4	OS35FDS4002F	1SCA109011R1001	1	0.9

Side operated fusible disconnect switches, UL- and CSA-types

Including terminal bolt set (OS100G), a black ON-OFF plastic handle and shaft as standard. The handle is IP65 protected, Nema type 1, 3R, 12, padlockable in the OFF-position and with door interlock in the ON-position. The shaft is adjustable for a range of installation depths. Fuse standards UL 198C.

Ampere rating [A]	Horse power ratings 3 phase 240/480/600V [HP]	Fuse type, size	Number of poles	Type	Order number	Units/ type [pcs]	Weight [kg]
Shaft mounting depths measured from the left side of the switch, 3-pole: H=154…166 mm and 4-pole: H= 189…201 mm. Protected tunnel terminals, IP20.							
30	7.5/15/20	CC, 30A	3	OS30FACCS30P	1SCA108999R1001	1	0.7
30	7.5/15/20	J, 30A	3	OS30FAJS30P	1SCA108838R1001	1	0.7

Side operated switch fuses without handle, UL- and CSA-types

Protected tunnel terminals, IP20.[2]							
60	15/30/50	J, 60A	3	OS60GJS30	1SCA116051R1001	1	1.3
60	15/30/50	J, 60A	4	OS60GJS40N1	1SCA116763R1001	1	1.6
60	15/30/50	J, 60A	4	OS60GJS40F	1SCA115970R1001	1	1.6
Terminal bolt kit							
100	30/60/75	J, 100A	3	OS100GJS30	1SCA115971R1001	1	1.5
100	30/60/75	J, 100A	4	OS100GJS40N1	1SCA116764R1001	1	1.8
100	30/60/75	J, 100A	4	OS100GJS40N2	1SCA116765R1001	1	1.8
100	30/60/75	J, 100A	4	OS100GJS40F	1SCA115972R1001	1	1.8

Side operated switch fuses with direct mounted handle

Including a black Test-ON-OFF plastic handle and shaft as standard. The handle is padlockable in the OFF-position.

Protected tunnel terminals, IP20.[2]							
60	15/30/50	J, 60A	3	OS60GJS30K	1SCA116426R1001	1	1.3
60	15/30/50	J, 60A	4	OS60GJS40FK	1SCA115941R1001	1	1.6
Terminal bolt kit							
100	30/60/75	J, 100A	3	OS100GJS30K	1SCA115942R1001	1	1.5
100	30/60/75	J, 100A	4	OS100GJS40FK	1SCA115943R1001	1	1.8

Shafts and handles included as standard

Suitable for switches	Included shaft	Included handle	Included terminal bolts
OS16...35FD_ , OS30FA_	OXP6X70-V0	OHB65J6	
OS60GJS_K	OXP6X42-TO	OHB65D6	
OS100GJS_K	OXP6X42-TO	OHB65D6	M8X25

F = Fused switched neutral
N1 = Non-fused switched neutral on the left side
N2 = Non-fused switched neutral on the right side

[1] Use Neozed DO2 adaptor ring
[2] Approval pending

Motorized switch fuses OSM, DIN-types
Ordering information


S07020

OSM32...63_M_


S07021

OSM100...160_M_


S07022

OSM250_M_


S07023

OSM315...400_M_

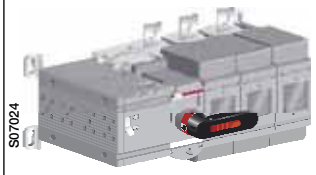
S07024

OSM630...800_M_


S07025

OSM1250_M_

Motorized switch fuses OSM, DIN-types

Including a handle for manual operation, bolt kit with nut and washers for all terminals (100A…1250A), male connectors for control circuit and a handle and spare fuse storage clip.

Type codes for motor voltage U_e = 220-240 VAC

Rated current AC-20…23 ≤ 690V [A]	Fuse size	Number of poles	Type	Order number	Units/ type [pcs]	Weight [kg]
32	000	3	OSM32GD3M230C	1SCA116664R1001	1	7.0
32	000	4	OSM32GD4N2M230C	1SCA118822R1001	1	7.3
63	000	3	OSM63GD3M230C	1SCA116660R1001	1	7.0
63	000	4	OSM63GD4N2M230C	1SCA118865R1001	1	7.3
125	000,00	3	OSM125GD3M230C	1SCA116674R1001	1	7.6
125	000,00	4	OSM125GD4N2M230C	1SCA118828R1001	1	7.9
160	000,00	3	OSM160GD3M230C	1SCA116673R1001	1	7.6
160	000,00	4	OSM160GD4N2M230C	1SCA118831R1001	1	7.9
200	0	3	OSM200D3M230C	1SCA104284R1001	1	9.6
200	0	3+N	OSM200D3N3M230C	1SCA104282R1001	1	9.8
200	0	4	OSM200D4N2M230C	1SCA118836R1001	1	10.7
250	0-1	3	OSM250D3M230C	1SCA104295R1001	1	10.4
250	0-1	3+N	OSM250D3N3M230C	1SCA104297R1001	1	10.5
250	0-1	4	OSM250D4N2M230C	1SCA118838R1001	1	11.2
400	0-2	3	OSM400D3M230C	1SCA104315R1001	1	14.8
400	0-2	3+N	OSM400D3N3M230C	1SCA104317R1001	1	15.1
400	0-2	4	OSM400D4N2M230C	1SCA118842R1001	1	16.7
630	3	3	OSM630D3M230C	1SCA104518R1001	1	34
630	3	3+N	OSM630D3N3M230C	1SCA104533R1001	1	35
630	3	4	OSM630D4N2M230C	1SCA118846R1001	1	38
800	3	3	OSM800D3M230C	1SCA104522R1001	1	34
800	3	3+N	OSM800D3N3M230C	1SCA104534R1001	1	35
800	3	4	OSM800D4N2M230C	1SCA118847R1001	1	38
1250	4	3	OSM1250D3M230C	1SCA112549R1001	1	55
1250	4	3+N	OSM1250D3N3M230C	1SCA112547R1001	1	56
1250	4	4	OSM1250D4N2M230C	1SCA118850R1001	1	65
1250	4a	3	OSM1250DA3M230C	1SCA112546R1001	1	55
1250	4a	3+N	OSM1250DA3N3M230C	1SCA112544R1001	1	56
1250	4a	4	OSM1250DA4N2M230C	1SCA118851R1001	1	65

Handle and bolt kits included as standard

Suitable for switch fuses	Handle+shaft kit	Bolt kit
OSM32…63	OTV250EMK	-
OSM100…200	OTV250EMK	M8x25
OSM250	OTV250EMK	M10X30
OSM315…400	OTV400EMK	M10X30
OSM630…800	OTV800EMK	M12X40
OSM1250	OTV1000EMK	M12X50

Number of poles: 3+N / Type: _N3_ = Include a detachable neutral link integrated into the mechanism
N2 = Non-fused switched neutral on the right side
Available on request: F = Fused switched neutral and N1 = Non-fused switched neutral on the left side,

Motorized switch fuses OSM, BS and NFC-types
Ordering information


S07020

OSM32...63_M_


S07021

OSM100...160_M_


S07022

OSM250_M_


S07023

OSM315...400_M_

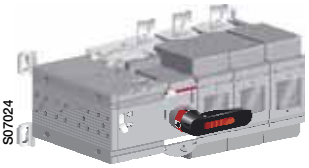
S07024

OSM630...800_M_


S07025

OSM1250_M_

Motorized switch fuses OSM, BS-types

Including a handle for manual operation, bolt kit with nut and washers for all terminals (100A…1250A), male connectors for control circuit and a handle and spare fuse storage clip.

Type codes for motor voltage U_e = 220-240 VAC.

Rated current AC-20…23 ≤ 690V [A]	Fuse size	Number of poles	Type	Order number	Units/ type [pcs]	Weight [kg]
32	A2-A3	3	OSM32GB3M230C	1SCA116662R1001	1	7.0
32	A2-A3	4	OSM32GB4N1M230C	1SCA118775R1001	1	7.3
63	A2-A3	3	OSM63GB3M230C	1SCA116657R1001	1	7.0
63	A2-A3	4	OSM63GB4N1M230C	1SCA118776R1001	1	7.3
100	A2-A4	3	OSM100GB3M230C	1SCA116679R1001	1	7.6
100	A2-A4	4	OSM100GB4N1M230C	1SCA118779R1001	1	7.9
125	A2-A4	3	OSM125GB3M230C	1SCA116677R1001	1	7.6
125	A2-A4	4	OSM125GB4N1M230C	1SCA118780R1001	1	7.9
160	A2-A4	3	OSM160GB3M230C	1SCA116670R1001	1	7.6
160	A2-A4	4	OSM160GB4N1M230C	1SCA118781R1001	1	7.9
200	B1-B2	3	OSM200B3M230C	1SCA104272R1001	1	9.6
200	B1-B2	3+N	OSM200B3N3M230C	1SCA104323R1001	1	9.8
200	B1-B2	4	OSM200B4N1M230C	1SCA118784R1001	1	10.7
250	B1-B3	3	OSM250B3M230C	1SCA104287R1001	1	10.4
250	B1-B3	3+N	OSM250B3N3M230C	1SCA104290R1001	1	10.5
250	B1-B3	4	OSM250B4N1M230C	1SCA118785R1001	1	11.2
315	B1-B4	3	OSM315B3M230C	1SCA104303R1001	1	14.8
315	B1-B4	3+N	OSM315B3N3M230C	1SCA104306R1001	1	15.1
315	B1-B4	4	OSM315B4N1M230C	1SCA118788R1001	1	16.7
400	B1-B4	3	OSM400B3M230C	1SCA104310R1001	1	14.8
400	B1-B4	3+N	OSM400B3N3M230C	1SCA104312R1001	1	15.1
400	B1-B4	4	OSM400B4N1M230C	1SCA118789R1001	1	16.7
630	C1-C2	3	OSM630B3M230C	1SCA104516R1001	1	34
630	C1-C2	3+N	OSM630B3N3M230C	1SCA104535R1001	1	35
630	C1-C2	4	OSM630B4N1M230C	1SCA118791R1001	1	38
800	C1-C3	3	OSM800B3M230C	1SCA104520R1001	1	34
800	C1-C3	3+N	OSM800B3N3M230C	1SCA104536R1001	1	35
800	C1-C3	4	OSM800B4N1M230C	1SCA118792R1001	1	38
1250	D1	3	OSM1250B3M230C	1SCA112552R1001	1	55
1250	D1	3+N	OSM1250B3N3M230C	1SCA112550R1001	1	56
1250	D1	4	OSM1250B4N1M230C	1SCA118795R1001	1	65

Motorized switch fuses OSM, NFC-types

50	14X51	3	OSM50GF3M230C	1SCA116666R1001	1	7.0
50	14X51	4	OSM50GF4N1M230C	1SCA118871R1001	1	7.3
125	22X58	3	OSM125GF3M230C	1SCA116681R1001	1	7.6
125	22X58	4	OSM125GF4N1M230C	1SCA118798R1001	1	7.9

Handle and bolt kits included as standard

Suitable for switch fuses	Handle+shaft kit	Bolt kit
OSM32…63	OTV250EMK	-
OSM100…200	OTV250EMK	M8x25
OSM250	OTV250EMK	M10X30
OSM315…400	OTV400EMK	M10X30
OSM630…800	OTV800EMK	M12X40
OSM1250	OTV1000EMK	M12X50

Number of poles: 3+N / Type: _N3_ = Include a detachable neutral link integrated into the mechanism
N1 = Non-fused switched neutral on the left side
Available on request: F = Fused switched neutral, N2 = Non-fused switched neutral on the right side

Notes

Accessories
Selection overview

OS16...OS40 (OS Mini)

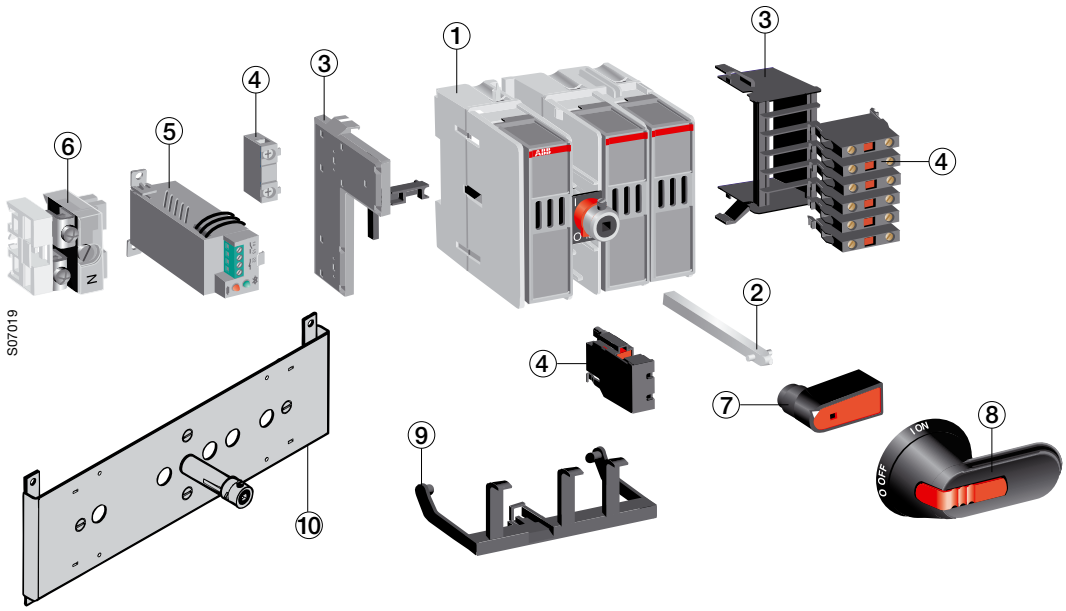

1 Switch fuse | 2 Extended shaft | 3 Mounting frame for auxiliary contact | 4 Auxiliary contact | 5 Fuse monitor | 6 Detachable neutral link | 7 Handle knob | 8 Pistol type handle | 9 Blown fuse indicator | 10 Conversion kit: 6/8-pole, C/O, mech. interlock

OS32G...OS63G

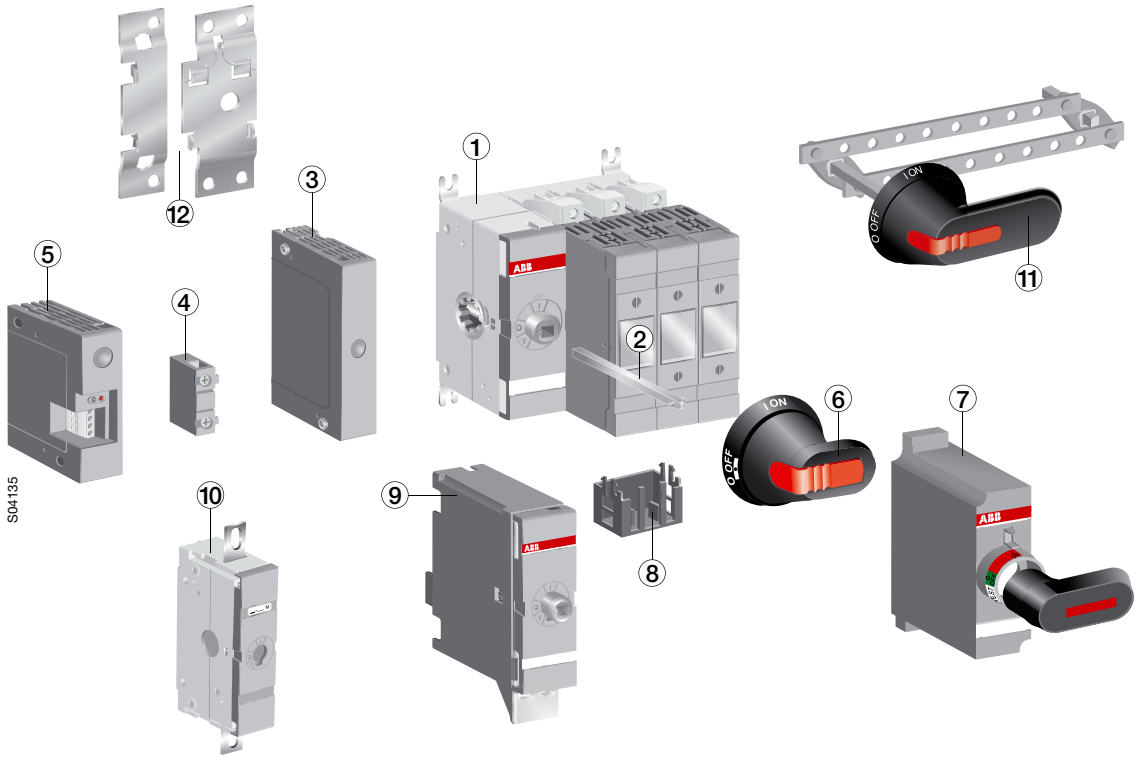

1 Switch fuse | 2 Extended shaft | 3 Module for auxiliary contacts | 4 Auxiliary contact | 5 Fuse monitor | 6 Pistol type handle | 7 Direct mounted handle | 8 Blown fuse indicator | 9 Interlocks, mechanical & electrical | 10 Detachable neutral link | 11 Conversion kit: 6/8-pole, C/O, by-pass, mech. interlock | 12 DIN rail mounting kit

OS100G...OS1250_

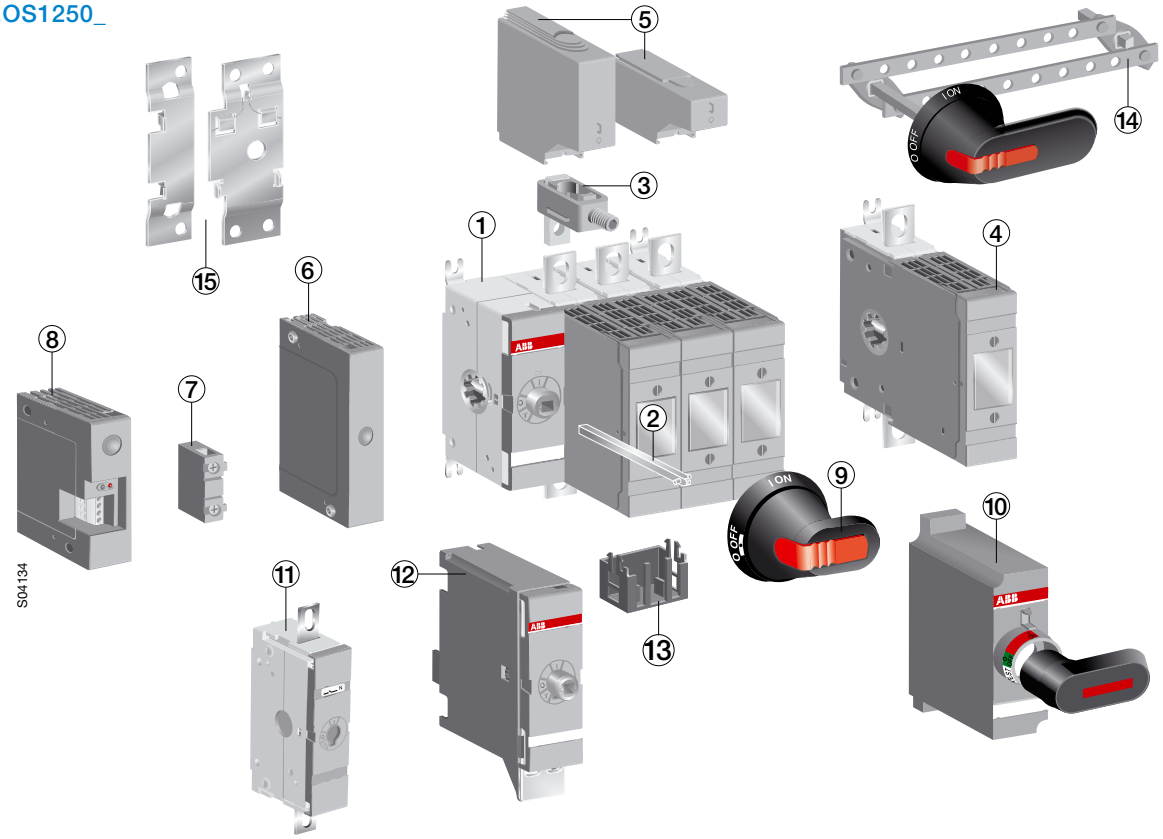

1 Switch fuse | 2 Extended shaft | 3 Terminal clamp | 4 Fourth pole | 5 Terminal shroud | 6 Module for auxiliary contacts | 7 Auxiliary contact | 8 Fuse monitor | 9 Pistol type handle | 10 Direct mounted handle | 11 Detachable neutral link | 12 Interlocks, mechanical & electrical | 13 Blown fuse indicator | 14 Conversion kit: 6/8-pole, C/O, by-pass, mech. interlock | 15 DIN rail mounting kit (only for OS100G...160G_)

OSM32G...OSM1250

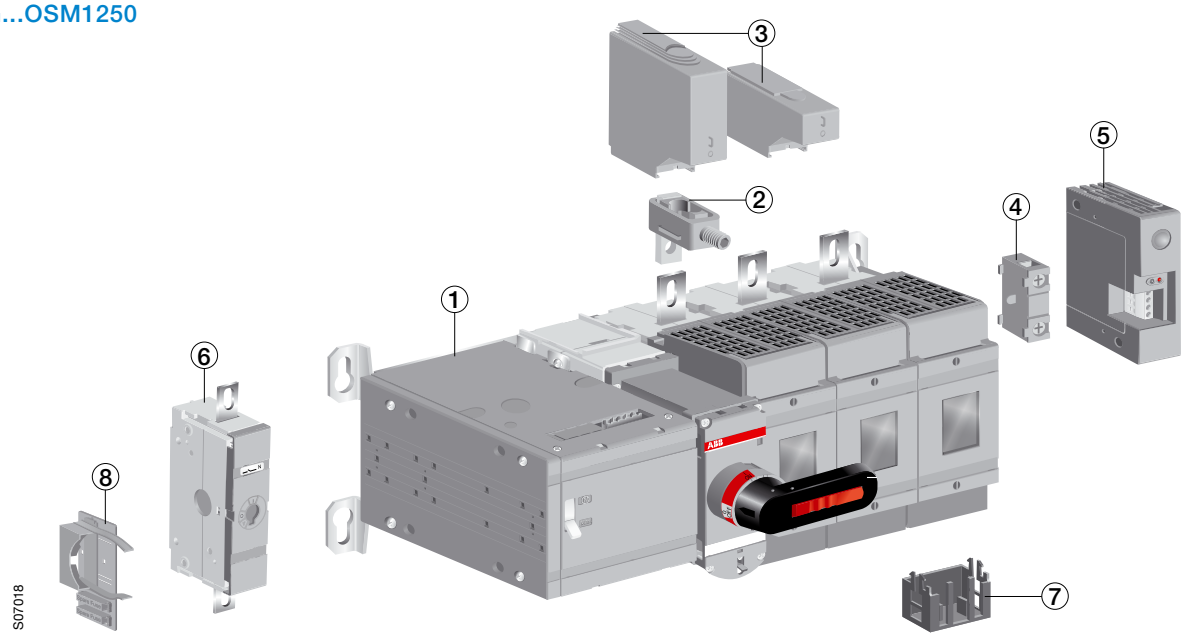

1 Motorized switch fuse | 2 Terminal clamp | 3 Terminal shroud | 4 Auxiliary contact | 5 Fuse monitor | 6 Detachable neutral link | 7 Blown fuse indicator | 8 Storage for handle and fuses



OHB65J6

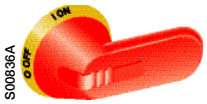

OHY65J6

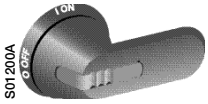

OHG65J6



OHB_



OHB274J12



OHB_P

Optional handles

For front operated switch fuses IP 65, Nema type 1, 3R, 12

Padlockable with 3 padlocks in the OFF-position, door interlock in the ON-position. Units/type = 1 pcs. Screw fixing from the back side of the handle, no screws on the front, ensures double insulation (excluding metallic handles).

Colour	Handle length [mm]	Type	Order number	Delivery batch [pcs]	Weight /unit [kg]
For shaft diameter 6 mm (for OSMini and OS32...250).					
Plastic handles, black and red-yellow: I-O/ON-OFF, grey: I-O.					
Black	45	OHB45J6	1SCA022380R8770	100	0.12
Red-Yellow	45	OHY45J6	1SCA022380R8930	100	0.12
Grey	45	OHG45J6	1SCA022380R8850	100	0.12
Black	65	OHB65J6	1SCA022380R9660	100	0.12
Red-Yellow	65	OHY65J6	1SCA022380R9820	100	0.12
Grey	65	OHG65J6	1SCA022380R9740	100	0.12
Black	80	OHB80J6	1SCA022381R0240	100	0.14
Plastic handles, black and red-yellow: Test/I-O/ON-OFF, grey: Test/I-O.					
Black	45	OHB45J6T	1SCA109870R1001	100	0.12
Black	65	OHB65J6T	1SCA022399R8110	100	0.12
Red-Yellow	65	OHY65J6T	1SCA022456R9540	100	0.12
Grey	65	OHG65J6T	1SCA022456R9620	100	0.12
Black	80	OHB80J6T	1SCA022399R8290	100	0.14
Stainless steel handles: I-O/ON-OFF, padlockable with 3 padlocks in the OFF-position, door interlock in the ON-position, IP66 (NEMA 4X)					
Metallic	65	OHM65L6	1SCA022739R1070	1	0.73
For shaft diameter 12 mm (for OS315...400) Plastic handles, black and red-yellow: I-O/ON-OFF, grey: I-O.					
Black	95	OHB95J12	1SCA022381R0830	90	0.16
Red-Yellow	95	OHY95J12	1SCA022381R1050	90	0.16
Grey	95	OHG95J12	1SCA022381R0910	90	0.16
Indication: Test-OFF-ON/Test-O-I					
Black	95	OHB95J12T	1SCA022736R1750	90	0.16
Red-Yellow	95	OHY95J12T	1SCA022736R1910	90	0.16
For shaft diameter 12 mm (for OS630...800). Plastic handles, black and red-yellow: I-O/ON-OFF, grey: I-O.					
Black	125	OHB125J12	1SCA022381R1560	90	0.16
Red-Yellow	125	OHY125J12	1SCA022381R1720	90	0.16
Grey	125	OHG125J12	1SCA022381R1640	90	0.16
Black	145	OHB145J12	1SCA022381R2110	90	0.17
Red-Yellow	145	OHY145J12	1SCA022381R2370	90	0.17
Grey	145	OHG145J12	1SCA022381R2290	90	0.17
Black	175	OHB175J12	1SCA022381R2450	90	0.18
Red-Yellow	175	OHY175J12	1SCA022381R2700	90	0.18
Grey	175	OHG175J12	1SCA022381R2610	90	0.18
Indication: Test-OFF-ON/Test-O-I					
Black	125	OHB125J12T	1SCA022652R2220	90	0.16
Red-Yellow	125	OHY125J12T	1SCA022652R2310	90	0.16
Black	145	OHB145J12T	1SCA022652R2570	90	0.17
Red-Yellow	145	OHY145J12T	1SCA022652R2650	90	0.17
Black	175	OHB175J12T	1SCA022708R0740	90	0.18
For shaft diameter 12 mm (for OS1200...1250). Plastic handles, black and red-yellow: I-O/ON-OFF.					
Black	274	OHB274J12	1SCA115920R1001	25	0.54
Red-Yellow	274	OHY274J12	1SCA115919R1001	25	0.54
Black	330	OHB330J12	1SCA115922R1001	25	0.58
Red-Yellow	330	OHY330J12	1SCA115921R1001	25	0.58
Black	2x150	OHB150J12P	1SCA022865R9430	50	0.17
Red-Yellow	2x150	OHY150J12P	1SCA101586R1001	50	0.17
Black	2x200	OHB200J12P	1SCA022865R9510	50	0.40
Red-Yellow	2x200	OHY200J12P	1SCA101587R1001	50	0.40
Indication: Test-OFF-ON/Test-O-I					
Black	274	OHB274J12T	1SCA120250R1001	25	0.54
Black	330	OHB330J12T	1SCA120252R1001	25	0.58
Black	2x200	OHB200J12PT	1SCA106510R1001	50	0.40
Red-Yellow	2x200	OHY200J12PT	1SCA111512R1001	50	0.40

- **Door interlocking in the ON-position means that the door cannot be opened, when the handle is in the ON-position. This can be defeated to allow authorized personnel access for inspection.**
- **Handles padlockable in all positions are available on request.**

Optional handles
Ordering information



OHM_

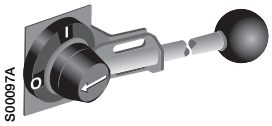

YASDA_



OH_E00S

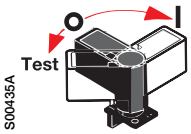

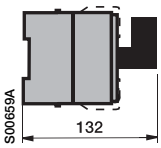

OHBS5



OHB4

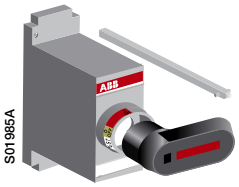

OSV_

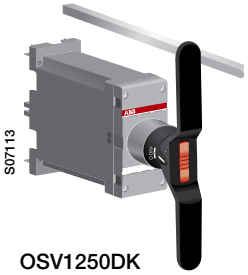

OSV1250DK

Optional handles

For front operated switch fuses IP 65, Nema type 1, 3R, 12

Colour	Handle length [mm]	Type	Order number	Delivery batch [pcs]	Weight /unit [kg]
Stainless steel handles: I-O/ON-OFF, padlockable with 3 padlocks in the OFF-position, door interlock in the ON-position, IP66 (NEMA 4X)					
Metallic	125	OHM125L12	1SCA022739R1150	1	0.76
Metallic	175	OHM175L12	1SCA022739R1230	1	0.83
Metallic	275	OHM275L12	1SCA022832R4840	1	0.96
Metallic handles, padlockable with 3 padlocks in OFF-position, door interlock in the ON-position.					
Black 1-0	220	YASDA 7	1SCA022071R3010	1	0.70
Black ON-OFF	220	YASDA 8	1SCA022071R3270	1	0.70
Black I-0	320	YASDA35	1SCA104400R1001	1	0.80

For side operated switch fuses, IP 65, Nema type 1, 3R, 12

For mounting on the side of the enclosure. Padlockable with three padlocks in the OFF-position, door interlock in the ON-position, IP 65. The position indications are rotated 90°. If the handle is mounted on the front of the door, a standard handle can be used as well. Units/type = 1 pcs.

Colour	Handle length [mm]	Type	Order number	Delivery batch [pcs]	Weight [kg]
For shaft diameter 6 mm					
Plastic handles, black and red-yellow: I-O/ON-OFF, grey: I-O.					
Black	65	OHB65J6E00S	1SCA022382R9850	100	0.12
Red-yellow	65	OHY65J6E00S	1SCA022382R9930	100	0.12
Grey	65	OHG65J6E00S	1SCA022383R4510	100	0.12
Plastic handles, black and red-yellow: Test/I-O/ON-OFF, grey: Test/I-O.					
Black	65	OHB65J6TE00S	1SCA109016R1001	100	0.12
Red-yellow	65	OHY65J6TE00S	1SCA022688R0140	100	0.12
Grey	65	OHG65J6TE00S	1SCA109014R1001	100	0.12
For shaft diameter 12 mm					
Plastic handles, indication I-O/ON-OFF					
Black	145	OHB145J12E00S	1SCA022679R9700	90	0.17

Direct mounted handles

Plastic handles, panel board handle, can be padlocked in the OFF-position. Includes a special shaft. The handle can also be used with a standard shaft as padlocking device.

For front operated OS Mini

Indication I-O/ON-OFF/TEST. Handle padlockable with 2 padlocks in the OFF- and Test-positions when the door is open. Max. bail dia 8 mm.

Black	OHBS5	1SCA109015R1001	1	0.05

For side operated OS Mini

Padlockable with three padlocks in the OFF- position when the door is open. Max. bail dia 6 mm.

Black	OHB4	1SCA022439R4050	1	0.05

For front operated OS 32G...1250

Test OFF-ON/Test O-I indication
Padlockable with three padlocks in the OFF-position, optionally also in the ON-position.
Includes shaft and mechanism cover.

Suitable for switches	Colour	Type	Order number	Units/ type [pcs]	Weight [kg]
OS32G...160G, OS200B/J_K	Black	OSV200BK	1SCA022779R7530	1	0.14
	Yellow-red	OSVY200BK	1SCA022779R7700	1	0.14
OS200D…250D/B_K	Black	OSV250DK	1SCA022763R3510	1	0.16
	Yellow-red	OSVY250DK	1SCA022778R6500	1	0.16
OS400D_K	Black	OSV400DK	1SCA022763R4230	1	0.34
	Yellow-red	OSVY400DK	1SCA022779R5590	1	0.34
OS315…400B/J_K	Black	OSV400BK	1SCA022763R3930	1	0.33
	Yellow-red	OSVY400BK	1SCA022779R5830	1	0.33
OS600…800_K	Black	OSV800DK	1SCA107794R1001	1	1.1
	Yellow-red	OSVY800DK	1SCA108703R1001	1	1.1
OS1200...OS1250_K	Black	OSV1250DK	1SCA107797R1001	1	1.5
	Yellow-red	OSVY1250DK	1SCA108702R1001	1	1.5

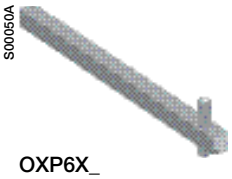

OXP6X_



OXP_X_-45

Extended shafts

Units/type = 1 piece





Shaft length [mm]	Front operated H [mm]	Side operated H [mm]	Type	Order number	Delivery batch [pcs]	Weight /unit [kg]
For OS 16...35 (Mini) [2], shaft diameter 6 mm						
150	135...210	154...166	OXP6X150[5]	1SCA022295R5600	10	0.05
170	155...230	174...186	OXP6X170	1SCA108224R1001	10	0.05
265	250...325	269...281	OXP6X265	1SCA108225R1001	10	0.08
400	385...460	404...416	OXP6X400	1SCA108226R1001	10	0.12
150	135...210	154...166	OXP6X150-45[1]	1SCA022294R4400	10	0.05
170	155...230	174...186	OXP6X170-45[1]	1SCA108227R1001	10	0.05
265	380...460	269...281	OXP6X265-45[1]	1SCA108228R1001	10	0.08
400	380...460	404...416	OXP6X400-45[1]	1SCA108229R1001	10	0.12
For OS 40 (Mini) [2], shaft diameter 6 mm						
150	135...210	235...243	OXP6X150[5]	1SCA022295R5600	10	0.05
170	155...230	255...363	OXP6X170	1SCA108224R1001	10	0.05
265	250...325	352...360	OXP6X265	1SCA108225R1001	10	0.08
400	385...460	487...495	OXP6X400	1SCA108226R1001	10	0.12
150	135...210	235...243	OXP6X150-45[1]	1SCA022294R4400	10	0.05
170	155...230	255...363	OXP6X170-45[1]	1SCA108227R1001	10	0.05
265	250...325	352...360	OXP6X265-45[1]	1SCA108228R1001	10	0.08
400	385...460	487...495	OXP6X400-45[1]	1SCA108229R1001	10	0.12
For OS 32G...63G [4] , shaft diameter 6 mm						
63		161…167	OXP6X63	1SCA111010R1001	10	0.02
90		188…194	OXP6X90	1SCA022064R1180	10	0.03
130	127…174[6]	228…234	OXP6X130	1SCA022057R0570	10	0.04
161	138…205		OXP6X161[3]	1SCA022067R1760	10	0.05
210	187…254		OXP6X210	1SCA022295R6080	10	0.06
290	267…334		OXP6X290	1SCA022042R6370	10	0.08
360	337…404		OXP6X360	1SCA022042R6530	10	0.10
430	407…474		OXP6X430	1SCA022056R6030	10	0.12
210	187…254		OXP6X210-45[1]	1SCA022294R4230	10	0.06
290	267…334		OXP6X290-45[1]	1SCA022304R4290	10	0.08
360	337…404		OXP6X360-45[1]	1SCA022341R4640	10	0.10
For OS100G...160G [8], shaft diameter 6 mm						
63		196…202	OXP6X63	1SCA111010R1001	10	0.02
90		223…229	OXP6X90	1SCA022064R1180	10	0.03
130	137…174[7]	263…269	OXP6X130	1SCA022057R0570	10	0.04
161	138…205		OXP6X161[3]	1SCA022067R1760	10	0.05
210	187…254		OXP6X210	1SCA022295R6080	10	0.06
290	267…334		OXP6X290	1SCA022042R6370	10	0.08
360	337…404		OXP6X360	1SCA022042R6530	10	0.10
430	407…474		OXP6X430	1SCA022056R6030	10	0.12
210	187…254		OXP6X210-45[1]	1SCA022294R4230	10	0.06
290	267…334		OXP6X290-45[1]	1SCA022304R4290	10	0.08
360	337…404		OXP6X360-45[1]	1SCA022341R4640	10	0.10
For OS 200...250 DIN-type, shaft diameter 6 mm						
161	160...205		OXP6X161	1SCA022067R1760	10	0.05
210	189...254		OXP6X210[3]	1SCA022295R6080	10	0.06
290	269...334		OXP6X290	1SCA022042R6370	10	0.08
For OS 200...250 BS-type, shaft diameter 6 mm						
161	140…205		OXP6X161	1SCA022067R1760	10	0.05
210	189…254		OXP6X210[3]	1SCA022295R6080	10	0.06
290	269…334		OXP6X290	1SCA022042R6370	10	0.08

[1] The shaft position is rotated 45 degrees
[2] Side operated, 4-pole: add 36 mm
[3] Included as standard in P-types
[4] Side operated 3-pole OS60GJ: add 33mm, 4-pole types: OS32…63GD/GB: add 23.5 mm, OS60GJ: add 68mm
[5] Included as standard in front operated types
[6] OS32…63GB/GF: 115…174
[7] OS100GJ: 113…174, OS100GB…160GB: 121…174
[8] Side operated 4-pole types: add 35mm

Extended shafts and shaft accessories
Ordering information

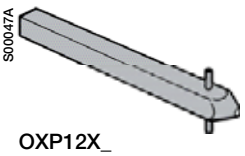

OXP12X_



OXP12X_-45

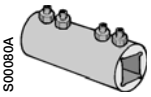

OETLZX95

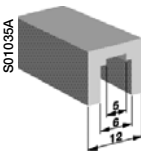

OETLZK19

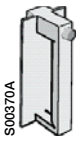

OFAE504



OFAE505



OHZX14

Extended shafts



Shaft length [mm]	Front operated H [mm]	Type	Order number	Units/ type [pcs]	Weight [kg]
For OS 315...400, shaft diameter 12 mm					
250	230…325	OXP12X250[2]	1SCA022325R6980	1	0.30
280	260…355	OXP12X280	1SCA022137R5140	1	0.30
325	305…400	OXP12X325	1SCA022042R5810	1	0.36
395	375…470	OXP12X395	1SCA022042R5990	1	0.43
465	445…540	OXP12X465	1SCA022042R6020	1	0.51
535	515…610	OXP12X535	1SCA022042R6110	1	0.59
For OS 630...800, shaft diameter 12 mm					
280	258...382	OXP12X280[2]	1SCA022137R5140	1	0.30
325	303...427	OXP12X325	1SCA022042R5810	1	0.40
395	373...497	OXP12X395	1SCA022042R5990	1	0.50
465	443...567	OXP12X465	1SCA022042R6020	1	0.60
535	513...637	OXP12X535	1SCA022042R6110	1	0.70
280	258...382	OXP12X280-45[1]	1SCA022382R0800	1	0.30
325	303...427	OXP12X325-45[1]	1SCA022304R4450	1	0.40

Shaft length [mm]	Front operated H with handle [mm] OH_274J12	OHB200J12P	Type	Order number	Units/ type [pcs]	Weight [kg]
For OS 1200...1250, shaft diameter 12 mm						
395	366…495	371...500	OXP12X395[2]	1SCA022042R5990	1	0.43
465	436…565	441...570	OXP12X465	1SCA022042R6020	1	0.51
535	506…635	511...640	OXP12X535	1SCA022042R6110	1	0.59

Shaft extension socket

For extending the shaft of combination attachment.

Suitable for shaft with diameter [mm]	Type	Order number	Units/ type [pcs]	Weight [kg]
12	OETLZX95	1SCA022083R5620	1	0.04

Adapters for extension socket

Adapters to place inside of OETLZX 95 to connect shafts of different sizes.

6/6, 6/12	OETLZK19	1SCA022093R1850	1	0.02

Fuse replacement handles

For DIN-fuse sizes	Description	Type	Order number	Units/ type [pcs]	Weight [kg]
000,00,1,2,3	Compact	OFAE 504	1SCA022007R6880	1	0.16
000,00,1,2,3	690 V	OFAE 505	2CMA125276R1000	1	0.80

Extension ring for pistol type handles

Colour	Suitable for handles	Type	Order number	Delivery batch [pcs]	Weight unit [kg]
Black	OHB_	OHZX14	1SCA022851R6590	1	0.06

[1] The shaft position is rotated 45 degrees
[2] Included as standard in front operated P-types

Auxiliary contacts
Ordering information

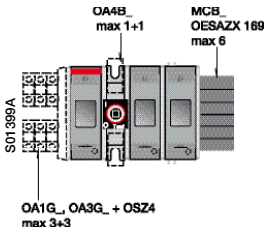

OS Mini



MCB_

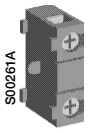

OA_G

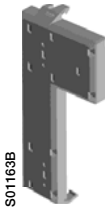

OSZ4

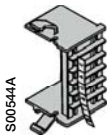

OESAZX169

Auxiliary contacts for OS Mini

Description	Type	Order number	Units/type [pcs]	Weight [kg]
Change over contacts Mounting to the switch mechanism, auxiliary/test contacts. Max. two change over contacts.				
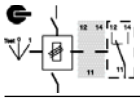 Handle position: Test / 0 / I; Main contacts: open / open / closed; Aux. / Test contacts N.O.: closed / open / closed	OA4B1C	1SCA022193R0150	1	0.03
Single pole contacts > 3 mm contact gap.				
1 NO 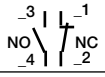	OA4B10	1SCA022276R9050	1	0.03
1 NC	OA4B01	1SCA022276R9210	1	0.03
Mounting on the side of the switch with aux.contact frame OESAZX 169.				
1NO 	MCB-10	1SCA022150R5110	1	0.03
1NC	MCB-01	1SCA022150R5370	1	0.03

Snap-on mounting on the switch, by using a frame OSZ4. IP20.
NO contacts are provided with a positive opening feature. Units/type = 1 piece. Types _AU have gold plated contacts for harsh environments and low operating voltages.

Description	Type	Order number	Delivery batch [pcs]	Weight /unit [kg]
1 NO 	OA1G10	1SCA022353R4970	10	0.03
1 NC	OA3G01	1SCA022456R7410	10	0.03
1 NO	OA1G10AU	1SCA022436R7910	10	0.03
1 NC	OA3G01AU	1SCA022819R5260	10	0.03

Mounting frames for auxiliary contacts of OS Mini

	Type	Order number	Units/type [pcs]	Weight [kg]
Frame for auxiliary contacts OA1G10 and OA3G01 and for fuse monitor. Max. 6 auxiliary contacts can be fitted.				
Mounting on the left side of the switch	OSZ4	1SCA022530R0200	1	0.06
Frame for MCB-_ auxiliary contacts. Not suitable for side operated switches. Max. 6 auxiliary contacts can be fitted.				
Mounting on the right side of the switch	OESAZX169	1SCA022196R9360	1	0.06

Auxiliary contacts
Ordering information

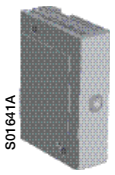

OEA28



OA_G_

Auxiliary contacts for OS/OSM32G...1250

Mounting under the mechanism cover:

The “test” contacts operate in ON- and OFF-positions as well as when the handle is turned to TEST-position = 45 degrees over the OFF-position. The “test indication” contacts operate only when the handle is turned to TEST-position. See the function table below. The OA1G10 (N.O.) or OA3G01 (N.C.) auxiliary contact blocks can be used as standard auxiliary contacts, “test” or “test indication” contacts. The desired functions are achieved when an auxiliary contact block is installed in a specific place shown in the mounting instruction. In order to activate the “test” and “test indication” features a handle with test function is required. See the optional handles, page 36.

Function table of OS/OSM32G…1250 auxiliary contacts

Handle position	Main contacts	Aux./Test contacts N.O.	Test indication contacts N.O.
Test	open	closed	closed
0	open	open	open
I	closed	closed	open

Maximum number of contact blocks, “Aux./test” contacts and “test indication” contacts, see the table below. Standard versions include all except for N3-types which are equipped with integrated neutral through the mechanism.

Maximum number of auxiliary contacts under the mechanism cover

	OS32G…250		OS315…800		OS1200…1250	
Pole version	Standard	N3	Standard	N3	Standard	N3
Maximum number of contact blocks	4	0	8	4	12	8
Aux./Test contacts	4	0	4	2	8[1)]	6[2)]
Test indication contacts	2	0	4	2	4	2

The contact timing: see the chart, pages 72-73.

Mounting on the side of OS/OSM32G...1250

Units/type = 1 piece. Types _AU have gold plated contacts for harsh environments and low operating voltages.

Mounting on the left side of the OS switch fuse:

Maximum 8 auxiliary contact blocks (N.O. or N.C.) with the OEA28 module.
Side operated types: OS_S10..._S40 types only.

Mounting on the right side of the OSM motorized switch fuse:

Maximum 4 auxiliary contact blocks (N.O. or N.C.), snap-on mounting.

Suitable for switches	Description	Protection degree	Type	Order number	Delivery batch [pcs]	Weight [kg]
OS/OSM32G...1250	1NO	IP20	OA1G10	1SCA022353R4970	10	0.03
	1NC	IP20	OA3G01	1SCA022456R7410	10	0.03
	1NO	IP20	OA1G10AU	1SCA022436R7910	10	0.03
	1NC	IP20	OA3G01AU	1SCA022819R5260	10	0.03

Module for auxiliary contacts for OS32...1250

Screw mounting to the left side of the switch	OEA28	1SCA022714R8810	1	0.04

Performance data for auxiliary contacts

OA1G_ , OA3G_	
U_i/[V]	690
Uimp/[kV]	4
Pollution degree	3
I_{th}/[A]	16
Cable size	1…2 x 0,75…2,5mm²
Maximum fuse	16A/gG
NEMA	A600, R300
Wire size	18 - 14AWG, 1(2)

	AC15		DC12		DC13	
Ue/[V]	Ie/[A]	Ue/[V]	Ie/[A]	P/[W]	Ie/[A]	P/[W]
230	6	24	10	240	2	48
400	4	72	4	288	0.8	58
690	2	125	2	250	0.55	69
		250	0,55	138	0.27	68
		440	0.1	44		

OA4_ EN61058-1	
U_i	400V
I_{th}	10A
Ie	400V AC
	10 (4) A, 10E3
	6 (2,5) A, 50E3
NEMA	10 A, 125-250V AC, 1/4 HP
M3 Screw connection	

MCB_ IEC60947-5-1				
U_i	690V			
I_{th}	10A			
		AC12	AC15	DC13
Ie	24V	10	8	5
	110V	10	8	1.1
	220/240V	10	6	0.55
	250V		4	0.55
	380/415V		4	
	660/690V		2	
NEMA	A600, 10A, 600VAC			

[1)] 6 aux/test contacts and 2 early operation aux./test contacts
[2)] 4 aux/test contacts and 2 early operation aux./test contacts

Fourth poles, neutral links
Ordering information

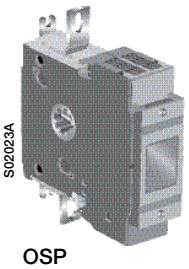

OSP



OSZ1, 2



OESAZX171

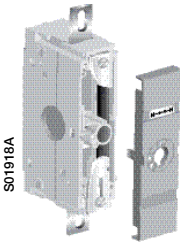

OXN_



OESAZX_

Fourth poles

Snap-on mounting to the side of the switch (not suitable for OSM-types).

Suitable for 3-pole switches	Mounting side	Type	Order number	Units/ type [pcs]	Weight [kg]
Fusible 4. poles					
OS100GB...160GB	Left/right	OSP160GB	1SCA114769R1001	1	0.45
OS125GD...160GD	Left/right	OSP160GD	1SCA114768R1001	1	0.45
OS200B	Left/right	OSP200B	1SCA022735R9180	1	1.20
OS200D	Left/right	OSP200D	1SCA022735R8960	1	1.20
OS250B	Left/right	OSP250B	1SCA022770R4030	1	1.20
OS250D	Left/right	OSP250D	1SCA022735R9340	1	1.20
OS315B…400B	Left/right	OSP400B	1SCA022770R3140	1	2.00
OS400D	Left/right	OSP400D	1SCA022770R3220	1	2.00
OS630...800D	Left/right	OSP800D	1SCA100433R1001	1	4.20
OS630...800B	Left/right	OSP800B	1SCA100434R1001	1	4.20
OS1250D	Left/right	OSP1250D	1SCA107946R1001	1	7.20
OS1250DA	Left/right	OSP1250DA	1SCA112402R1001	1	7.20
OS1250B	Left/right	OSP1250B	1SCA107950R1001	1	7.20
Switched 4. poles					
OS100G...160G	Left/right	OSP160GN	1SCA114770R1001	1	0.45
OS200_	Left/right	OSP200N	1SCA022735R8700	1	1.20
OS250_	Left/right	OSP250N	1SCA022735R9260	1	1.20
OS400_	Left/right	OSP400N	1SCA022770R3490	1	1.20
OS630...800	Left/right	OSP800N	1SCA100432R1001	1	4.40
OS1200...1250	Left/right	OSP1250N	1SCA107943R1001	1	7.20

Neutral links

Max. wire	H/W/D [mm]	Mounting holes	Type	Order number	Units/type [pcs]	Weight [kg]
For OS Mini						
Detachable, mounting on the side of the switch, on the mounting plate or DIN-rail.						
16 mm² Cu	39/41/40	ø 4.2, distance 32	OESAZX171	1SCA022197R2580	1	0.15
For OS/OSM 32G...160G						
Detachable, mounting onto the base plate or DIN-rail.						
16 mm² Cu	39/41/40	ø 4.2, distance 32	OSZ1	1SCA022481R3710	1	0.06
35 mm² Cu	39/44/45	ø 4.2, distance 35	OSZ2	1SCA022481R3800	1	0.07
For OS/OSM 100G...1250						
Mounting with screws (included) onto either side of the switch (OXN250 to OS200...250) or on the base plate (OXN250...1250).						
Detachable, mounting on the switch						
OS200...250			OXN250	1SCA022752R9950	1	0.40
Detachable, mounting on the base plate						
OS/OSM32G...250			OXN250	1SCA022752R9950	1	0.40
OS/OSM315…400			OXN400	1SCA022770R3060	1	0.70
OS/OSM630…800			OXN800S	1SCA022831R4880	1	1.20
OS/OSM1250			OXN1250S	1SCA104163R1001	1	2.5

Mounting separately to the base plate

I_{th} [A]	Terminal size (WxD) [mm]; bolt size	Type	Order number	Units/ type [pcs]	Weight [kg]
250	12x3 M6	OESAZX162	1SCA022193R0400	1	0.12
315	20x3 M8	OESAZX164	1SCA022202R9520	1	0.10
400	25x4 M10	OESAZX165	1SCA022202R9790	1	0.12
1000	40x5 M12	OESAZX160	1SCA022186R3960	1	1.00

Solid links, handle and spare fuse storage
Ordering information



OFAW00

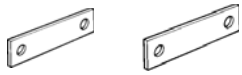

OESAZG5, OESAZS36

OESAZK98, OESAZL79



OTVS_

Solid links

Suitable for	Type	Order number	Units/ type [pcs]	Weight [kg]
OS20FB...OS 32FB_A1	OESAZG98	1SCA022354R9650	1	0.01
OS32GD...OS160GD	OFAW00	1SCA022003R9680	1	0.08
OS32FB_A2...OS63GB	OESAZG5	1SCA022057R1380	1	0.02
OS100GB...OS160GB	OESAZS36	1SCA022044R4600	1	0.02
OS100GJ	OESAZS175	1SCA022354R9570	1	0.03
OS200…250B, J	OEZNL1	1SCA022723R7400	1	0.19
OS315...400B, J[1)]	OESAZK98	1SCA022067R7370	1	0.24
OS630 B...800 B	OESAZL79	1SCA022067R7110	1	0.64
OS600J, 800…1200L	OEZNL8	1SCA113998R1001	1	0.58
OS1250B	OEZNL10	1SCA116437R1001	1	0.60
OS250 D	OFAW1	1SCA022003R9760	1	0.15
OS400 D	OFAW2	1SCA022003R9840	1	0.24
OS630/800 D	OFAW3	1SCA022003R9920	1	0.28

Handle and spare fuse storage clip for OSM

Handle and two spare fuses (for motor operator) can be stored on the OTVS_. OTVS_ can be installed on the left side of the motorized switch-fuse OSM_. Snap-on mounting, no tools required.

On OSM1250, the size of the handle prevents the installation onto the switch frame. However, the handle clip can be separately installed on the panel frame and the fuse holder clip onto the switch frame.

Suitable for	Type	Order number	Units/ type [pcs]	Weight [kg]
OSM32G...250	OTVS1	1SCA111413R1001	1	0.02
OSM315...1250	OTVS2	1SCA111414R1001	1	0.04

[1)] For OS400J fixing bolts and washers (M8) shall be ordered separately, type FLHSUM8x16-KB/41, two required.

Terminal shrouds and phase barriers
Ordering information

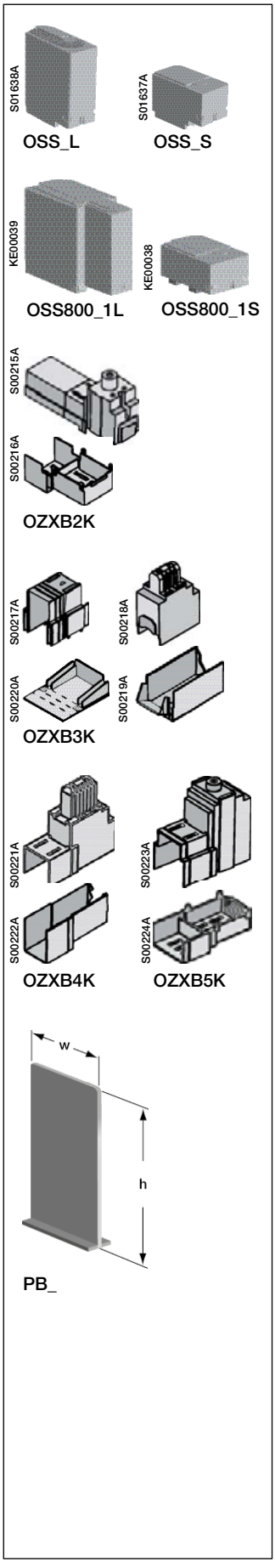

Terminal shrouds

Suitable for switches	Description	Type	Order number	Units/ type [pcs]	Weight [kg]
Pack of single pole terminal shrouds, snap-on mounting, grey plastic, IP 3X from front. Transparent shrouds available on request.					
OS/OSM100G…160G	Long type	OSS160GG1L/3	1SCA114764R1001	3	0.08
	Short type	OSS160GG1S/3	1SCA114766R1001	3	0.05
	Long type	OSS160GG1L/4	1SCA114765R1001	4	0.11
	Short type	OSS160GG1S/4	1SCA114767R1001	4	0.07
OS/OSM200	Long type	OSS200G1L/3	1SCA022731R8910	3	0.09
	Short type	OSS200G1S/3	1SCA022732R0130	3	0.06
	Long type	OSS200G1L/4	1SCA022731R9040	4	0.12
	Short type	OSS200G1S/4	1SCA022732R0050	4	0.08
OS/OSM250	Long type	OSS250G1L/3	1SCA022731R9390	3	0.09
	Short type	OSS250G1S/3	1SCA022731R9550	3	0.06
	Long type	OSS250G1L/4	1SCA022731R9470	4	0.12
	Short type	OSS250G1S/4	1SCA022731R9630	4	0.08
OS/OSM315...400	Long type	OSS400G1L/3	1SCA022776R6650	3	0.18
	Short type	OSS400G1S/3	1SCA022776R6900	3	0.10
	Long type	OSS400G1L/4	1SCA022776R6730	4	0.25
	Short type	OSS400G1S/4	1SCA022776R7030	4	0.15
OS/OSM600...800	Long type	OSS800G1L/3	1SCA022776R7200	3	0.53
	Short type	OSS800G1S/3	1SCA022776R7540	3	0.21
	Long type	OSS800G1L/4	1SCA022776R7380	4	0.70
	Short type	OSS800G1S/4	1SCA022776R7460	4	0.28
OS1200...1250/ OSM1250	Long type	OSS1250G1L/3	1SCA107938R1001	3	0.76
	Short type	OSS1250G1S/3	1SCA107939R1001	3	0.40
	Long type	OSS1250G1L/4	1SCA107940R1001	4	1.00
	Short type	OSS1250G1S/4	1SCA107941R1001	4	0.52
Terminal shrouds suitable for mechanisms with detachable integrated neutral (N3 versions).					
OS/OSM100G…250_N3_	Long type	OTS250G1L	1SCA022715R5340	1	0.03
	Short type	OTS250G1S	1SCA022715R5260	1	0.02
OS/OSM315…400_N3_	Long type	OSS250G1L	1SCA022727R5080	1	0.03
	Short type	OSS250G1S	1SCA022727R4940	1	0.02
OS/OSM630…800_N3_	Long type	OTS800G1L	1SCA022776R7710	1	0.10
	Short type	OTS800G1S	1SCA022776R8010	1	0.06
OS1200...1250_N3_ / OSM1250_N3_	Long type	OTS1600G1L	1SCA106134R1001	1	0.20
	Short type	OTS1600G1S	1SCA102667R1001	1	0.12

Single pole terminal shroud for terminal clamps, snap-on mounting, transparent plastic, IP 2X.

Suitable for terminal clamps	Type	Order number	Units/ type [pcs]	Weight [kg]
OZXB2, 2L	OZXB2K	1SCA022264R0010	3	0.06
OZXB2, 2L	OZXB2K/1	1SCA022644R6700	1	0.02
OZXB3, 4	OZXB3K	1SCA022264R0440	3	0.18
OZXB3, 4	OZXB3K/1	1SCA022644R6880	1	0.06
OZXB5, 6	OZXB4K	1SCA022199R2850	3	0.24
OZXB5, 6	OZXB4K/1	1SCA022644R6960	1	0.08
OZXB7, 7L	OZXB5K	1SCA022283R8040	3	0.15
OZXB7, 7L	OZXB5K/1	1SCA022644R7000	1	0.05

Phase barriers

The phase barriers designed for ABB Tmax T4-T5 MCCB's can also be used for OS200…400 switch fuses. 3-pole switch fuses need 4 barriers and 4-pole switch fuses need 6 barriers for full protection.

Suitable for switches	Number of poles	Height h [mm]	Cutting width w of the phase barrier [mm]	Type	Order number	Units/ type [pcs]
OS200B/D, OS250	3	100	55	PB100 low	1SDA054970R1	4
OS315, OS400	3	200	55	PB200 high	1SDA054972R1	4
	4	100	55	PB100 low	1SDA054971R1	6
	4	200	55	PB200 high	1SDA054973R1	6


S00738A
OZXT1


S00177A
OZXB1L

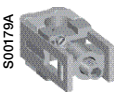
S00179A
OZXB2

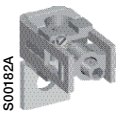
S00182A
OZXB2L, 7L


S01806A
OZXB8, 9


S00186A
OZXB3, 5


S00188A
OZXB4, 6

Terminal clamp sets for Al- and Cu-cables

Suitable for switches	Cable cross section [mm²]	Suitable shroud	Type	Order number	Units/ type [pcs]	Weight [kg]
Insulated versions						
OS/OSM32G…63G	16…50 Al,		OZXT1	1SCA022469R6310	3	0.05
	2.5…50 Cu		OZXT1/1	1SCA022469R6490	1	0.02
OZXB-type Al/Cu connectors made of stainless steel						
OS/OSM100G…160G	10...70	OSS160G_	OZXB1L	1SCA022169R2030	3	0.15
	10...70	OSS160G_	OZXB1L/1	1SCA022194R0030	1	0.05
	95...185	OSS160G_	OZXB8	1SCA022744R1510	3	0.50
	95...185	OSS160G_	OZXB8/1	1SCA022744R1600	1	0.17
OS/OSM200	10...70	OSS200_L	OZXB1L	1SCA022169R2030	3	0.15
	10...70	OSS200_L	OZXB1L/1	1SCA022194R0030	1	0.05
	25...120	OZXB2K	OZXB2	1SCA022119R7610	3	0.34
	25...120	OZXB2K	OZXB2/1	1SCA022194R0200	1	0.12
	25...120	OZXB2K	OZXB2L	1SCA022158R7750	3	0.42
	25...120	OZXB2K	OZXB2L/1	1SCA022194R0460	1	0.14
	95...185	OSS200_L	OZXB8	1SCA022744R1510	3	0.50
	95...185	OSS200_L	OZXB8/1	1SCA022744R1600	1	0.17
OS200	95...240	OSS200_L	OZXB9	1SCA022750R3210	3	0.50
	95...240	OSS200_L	OZXB9/1	1SCA022750R3300	1	0.17
OSM250	10...70	OSS200_L	OZXB1L	1SCA022169R2030	3	0.15
	10...70	OSS200_L	OZXB1L/1	1SCA022194R0030	1	0.05
OS/OSM250	25...120	OZXB2K	OZXB2L	1SCA022158R7750	3	0.42
	25...120	OZXB2K	OZXB2L/1	1SCA022194R0460	1	0.14
	95…185	OZXB3K	OZXB3	1SCA022136R8100	3	1.30
	95…185	OZXB3K	OZXB3/1	1SCA022194R0620	1	0.44
	2x(95…185)	OZXB3K	OZXB4	1SCA022137R4760	3	1.70
	2x(95…185)	OZXB3K	OZXB4/1	1SCA022194R0890	1	0.57
	120...300	OZXB4K	OZXB5	1SCA022137R2470	3	2.30
	120...300	OZXB4K	OZXB5/1	1SCA022194R1010	1	0.77
	120...240	OZXB5K	OZXB7L	1SCA022185R7130	3	1.20
	120...240	OZXB5K	OZXB7L/1	1SCA022194R1600	1	0.40
	95...185	OSS250_L	OZXB8	1SCA022744R1510	3	0.50
	95...185	OSS250_L	OZXB8/1	1SCA022744R1600	1	0.17
OS250	95...240	OSS250_L	OZXB9	1SCA022750R3210	3	0.50
	95...240	OSS250_L	OZXB9/1	1SCA022750R3300	1	0.17
OS/OSM315…400	25…120	OSS400_L	OZXB2L	1SCA022158R7750	3	0.42
	25…120	OSS400_L	OZXB2L/1	1SCA022194R0460	1	0.14
	95…185	OZXB3K	OZXB3	1SCA022136R8100	3	1.30
	95…185	OZXB3K	OZXB3/1	1SCA022194R0620	1	0.44
	2x(95…185)	OZXB3K	OZXB4	1SCA022137R4760	3	1.70
	2x(95…185)	OZXB3K	OZXB4/1	1SCA022194R0890	1	0.57
OS315...400	120…300	OZXB4K	OZXB5	1SCA022137R2470	3	2.30
	120…300	OZXB4K	OZXB5/1	1SCA022194R1010	1	0.77
	2x(120…300)	OZXB4K	OZXB6	1SCA022137R4920	3	3.03
	2x(120…300)	OZXB4K	OZXB6/1	1SCA022194R1270	1	1.00
OS/OSM315...400	120…240	OZXB5K	OZXB7	1SCA022185R0040	3	1.00
	120…240	OZXB5K	OZXB7/1	1SCA022194R1430	1	0.34
	95…185	OSS400_L	OZXB8	1SCA022744R1510	3	0.50
	95…185	OSS400_L	OZXB8/1	1SCA022744R1600	1	0.17
	95…240	OSS400_L	OZXB9	1SCA022750R3210	3	0.50
	95…240	OSS400_L	OZXB9/1	1SCA022750R3300	1	0.17

Connecting accessories
Ordering information


S00186A

OZXB3, 5


S00188A

OZXB4, 6

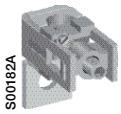
S00182A

OZXB2L, 7L


S01806A

OZXB8, 9



OZXR240

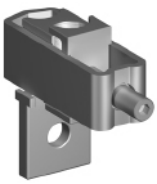

OZXR2X300

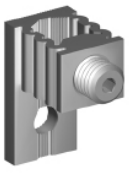

OZXP240

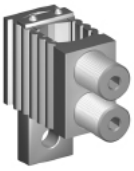

OZXP2X240

Terminal clamp sets for Al- and Cu-cables

Suitable for switches	Cable cross section [mm²]	Suitable shroud	Type	Order number	Units/ type [pcs]	Weight [kg]
OZXB-type Al/Cu connectors made of stainless steel						
OS/OSM630...800	95…185	OSS800_L	OZXB3	1SCA022136R8100	3	1.30
	95…185	OSS800_L	OZXB3/1	1SCA022194R0620	1	0.44
	2x(95…185)	OSS800_L	OZXB4	1SCA022137R4760	3	1.70
	2x(95…185)	OSS800_L	OZXB4/1	1SCA022194R0890	1	0.57
	120…300	OSS800_L	OZXB5	1SCA022137R2470	3	2.30
	120…300	OSS800_L	OZXB5/1	1SCA022194R1010	1	0.77
	2x(120…300)	OSS800_L	OZXB6	1SCA022137R4920	3	3.03
	2x(120…300)	OSS800_L	OZXB6/1	1SCA022194R1270	1	1.00
	120…240	OSS800_L	OZXB7L	1SCA022185R7130	3	1.20
	120…240	OSS800_L	OZXB7L/1	1SCA022194R1600	1	0.40
	95…185	OSS800_L	OZXB8	1SCA022744R1510	3	0.50
	95…185	OSS800_L	OZXB8/1	1SCA022744R1600	1	0.17
	95…240	OSS800_L	OZXB9	1SCA022750R3210	3	0.50
	95…240	OSS800_L	OZXB9/1	1SCA022750R3300	1	0.17
OS/OSM1250	95…185	OTS1600_L	OZXB3	1SCA022136R8100	3	1.30
	95…185	OTS1600_L	OZXB3/1	1SCA022194R0620	1	0.44
	2x(95…185)	OTS1600_L	OZXB4	1SCA022137R4760	3	1.70
	2x(95…185)	OTS1600_L	OZXB4/1	1SCA022194R0890	1	0.57
	120…300	OTS1600_L	OZXB5	1SCA022137R2470	3	2.30
	120…300	OTS1600_L	OZXB5/1	1SCA022194R1010	1	0.77
	2x(120…300)	OTS1600_L	OZXB6	1SCA022137R4920	3	3.03
	2x(120…300)	OTS1600_L	OZXB6/1	1SCA022194R1270	1	1.00
	120…240	OTS1600_L	OZXB7L	1SCA022185R7130	3	1.20
	120…240	OTS1600_L	OZXB7L/1	1SCA022194R1600	1	0.40
	95…185	OTS1600_L	OZXB8	1SCA022744R1510	3	0.50
	95…185	OTS1600_L	OZXB8/1	1SCA022744R1600	1	0.17
	95…240	OTS1600_L	OZXB9	1SCA022750R3210	3	0.50
	95…240	OTS1600_L	OZXB9/1	1SCA022750R3300	1	0.17
OZXR type Al/Cu connectors made of stainless steel and copper						
OS100G…160G	6…70	OSS160G_L	OZXR70	1SCA115529R1001	3	0.15
	25…95	OSS160G_L	OZXR95	1SCA115530R1001	3	0.21
OS200	25…95	OSS200_L	OZXR95	1SCA115530R1001	3	0.21
	95…185	OSS200_L	OZXR185	1SCA115531R1001	3	0.45
	2x(95…185)	-	OZXR2X185	1SCA115534R1001	3	0.66
OS250	95…185	OSS250_L	OZXR185	1SCA115531R1001	3	0.45
	2x(95…185)	-	OZXR2X185	1SCA115534R1001	3	0.66
OS315…400	95…240	OSS400_L	OZXR240	1SCA115532R1001	3	0.42
	2x(95…185)	-	OZXR2X185	1SCA115534R1001	3	0.66
	185…300	-	OZXR300	1SCA115533R1001	3	0.87
OS630…800	2x(185…300)	OSS800_L	OZXR2X300	1SCA115535R1001	3	1.59
OZXP type Al/Cu connectors made of tin plated aluminium profile						
OS100G…160G	6…95	OSS160G_L	OZXP95	1SCA115539R1001	3	0.09
OS200	6…95	OSS200_L	OZXP95	1SCA115539R1001	3	0.09
	16…120	OSS200_L	OZXP120	1SCA115540R1001	3	0.15
	25…150	-	OZXP150	1SCA115541R1001	3	0.18
	35…240	-	OZXP240	1SCA115542R1001	3	0.27
OS250	35…240	-	OZXP240	1SCA115542R1001	3	0.27
OS315…400	35…240	-	OZXP240	1SCA115542R1001	3	0.27
	95…300	-	OZXP300	1SCA115543R1001	3	0.42
	2x(70…240)	-	OZXP2X240	1SCA115544R1001	3	1.38
OS630…800	2x(70…240)	OSS800_L	OZXP2X240	1SCA115544R1001	3	1.38

Conversion kits
Ordering information

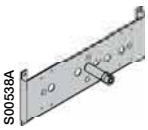

OW_6DS_



OESAZW2



OETLZW9



OTZW25, OETLZW11

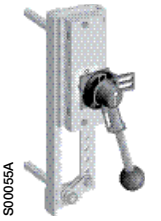

OETLZW12



OTZW26



OETLZW13

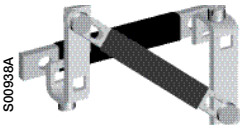

OTZW10



OETLZW3, 14, 15

Conversion kits for front operated combination switches

Suitable for switches	Remarks	Shaft distance [mm]	Type	Order number	Units/ type [pcs]	Weight [kg]
6 and 8-pole switch mechanism						
Parallel attachment for connecting 3- and 4-pole switches. The switches work simultaneously.						
6-pole switches						
OS Mini	Two 3-pole switches needed.		OWP6DS1	1SCA105255R1001	1	0.69
8-pole switches						
OS Mini	Two 4-pole switches needed.		OWP6DS2	1SCA105256R1001	1	0.69
The attachment levers are provided with holes, enabling different shaft distances. The combination switches can be mounted either horizontally or vertically.						
OS32G-250	Two 3- or 4-pole switches needed	45+(0-13)x15	OESAZW2	1SCA022078R1600	1	0.37
OS315-400	Two 3- or 4-pole switches needed	60+(0-19)x20	OETLZW9	1SCA022061R3300	1	1.1
Change-over switch mechanism						
Two switches connected with a mechanism operating into I-O-II positions.						
OS Mini	Two 3-pole switches needed		OWC6DSH1	1SCA105251R1001	1	1.0
OS Mini	Two 4-pole switches needed		OWC6DSH2	1SCA105252R1001	1	1.0
OS32G-250	Two 3- or 4-pole switches needed	210+(0 - 18)x20	OTZW25	1SCA022778R6920	1	2.8
OS315-400	Two 3- or 4-pole switches needed	210+(0 - 11)x20	OETLZW11	1SCA022078R0030	1	3.0
OS315-400	Two 3- or 4-pole switches needed	210+(0 - 20)x20	OETLZW12	1SCA022078R0200	1	4.6
By-pass switch mechanism						
A combination of two switches in parallel with a third switch for change-over operation to pass- by, for example, a breaker for maintenance. The by-pass attachment can be used together with another combination attachment.						
OS32G - 250	Three 3- or 4-pole switches needed	Between 1 and 2: 210+(0 - 9)x20 Between 1 and 3: 250+(0 - 9)x20	OTZW26	1SCA022778R7060	1	3.3
OS315-400	Three 3- or 4-pole switches needed	Between 1 and 2: 210+(0 - 18)x20 Between 1 and 3: 250+(0 - 18)x20	OETLZW13	1SCA022078R0460	1	4.0
Mechanical interlock mechanism						
Prevents one switch from closing to ON -position, if the other is not in OFF - position. OTZW/OETLZW-types: When mounted upside down, prevents one switch from opening to OFF-position, if the other is not in the ON-position. (UPS-usage, make-before-break)						
OS Mini	Two 3-pole switches needed		OWM6DS1	1SCA105253R1001	1	0.30
OS Mini	Two 4-pole switches needed		OWM6DS2	1SCA105254R1001		0.30
OS32G-250	Two 3- or 4-pole switches needed	190	OTZW10	1SCA022431R5280	1	0.40
OS315-800	Two 3- or 4-pole switches needed	250	OETLZW14	1SCA022077R3410	1	0.70
OS315-800	Two 3- or 4-pole switches needed	300	OETLZW3	1SCA022049R0380	1	0.80
OS315-1250	Two 3- or 4-pole switches needed	500	OETLZW15	1SCA022081R9340	1	1.24

Conversion kits
Ordering information

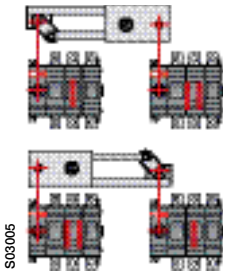

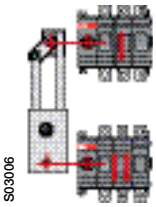

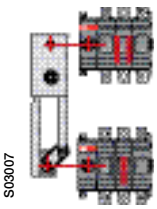

Change-over switches

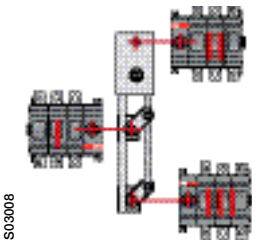

By-pass switches

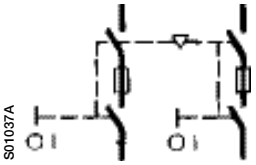

Mechanical interlock

The shafts and handles for conversion kits

Conversion kit type	To be ordered separately		Included in the conversion kit delivery		The standard handle or shaft of one of the combined switches can be used	
	Shaft	Handle	Shaft	Handle	Shaft	Handle
6 and 8-pole switches						
OWP6DS1	x	-	-	-	-	x
OWP6DS2	x	-	-	-	-	x
OESAZW2	-	-	x (2 pcs)	OHB145J12	-	-
OETLZW9	-	-	-	-	x	x
Change-over switches						
OWC6DSH1	x (length min. 170mm)	-	-	OHB65J6E011	-	-
OWC6DSH2	x (length min. 170mm)	-	-	OHB65J6E011	-	-
OTZW25	-	-	x (2 pcs)	OHB95J12E011	-	-
OETLZW11	-	-	x (2 pcs)	OHB145J12E011	-	-
OETLZW12	-	-	x (2 pcs)	YASDA21	-	-
By-pass switches						
OTZW26	-	-	x (3 pcs)	OHB95J12E011	-	-
OETLZW13	-	-	x (3 pcs)	YASDA 6	-	-
Mechanical interlock						
OWM6DS1	x (2 pcs, length min. 170mm)	x (2 pcs)	-	-	-	-
OWM6DS2	x (2 pcs, length min. 170mm)	x (2 pcs)	-	-	-	-
OTZW10	-	-	-	-	x	x
OETLZW14	-	-	-	-	x	x
OETLZW3	-	-	-	-	x	x
OETLZW15	-	-	-	-	x	x

The functional diagram

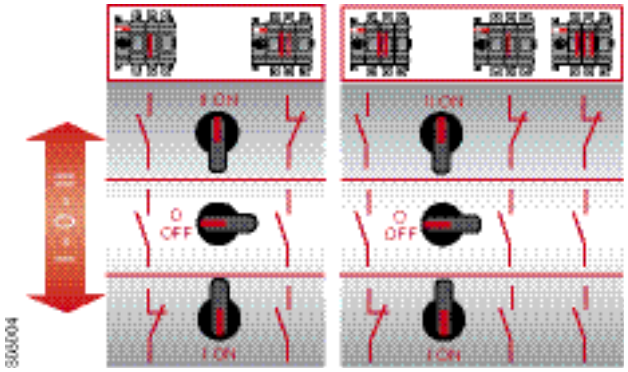

Change-over switch By-pass switch

Blown fuse indicators
Ordering information

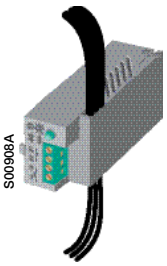
S00908A

OFM_


S01982A

OFS_


S00954A

OFMZX2


S01163B

OSZ4

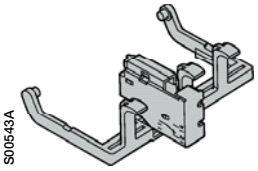
S00543A

OSD25

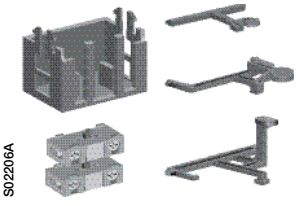
S02206A

OSZX_

Electronic fuse monitor

Includes the auxiliary contacts 1NO + 1NC. More information, see brochure OFM_OFS20GB.

OS Mini

Mounting onto the left side of OS Mini (with a frame OSZ4) or on mounting plate.

Rated voltage [Vac]	Type	Order Number	Units/ type [pcs]	Weight [kg]
120...260	OFM260	1SCA022459R8560	1	0.14
380...690	OFM690	1SCA022459R8480	1	0.14

OS/OSM32G...1250

Mounting onto the left side of OS32G-1250 switch fuse (right side of OSM motorized switch fuses) or on DIN-rail or on mounting plate.

100…260	OFS260	1SCA022716R0180	1	0.16
380…690	OFS690	1SCA022715R9920	1	0.16

Mounting accessories for fuse monitor

Suitable for switches	Flat terminal size [mm]	Type	Order Number	Units/ type [pcs]	Weight [kg]
Crimp terminals					
OS_	2.8 - 0.8	OFMZX2	1SCA022475R9910	6	0.01
Mounting frame for OS Mini					
Mounting on the left side of the switch		OSZ4	1SCA022530R0200	1	0.60

Blown fuse indicators (DPMM)

Striker type fuse is needed. See the dimensions in IEC60269-2-1, Section 1A.

Suitable for switches	Type	Order Number	Units/ type [pcs]	Weight [kg]
OS Mini				
Auxiliary contact (1x C/O) included. See the ratings on page 41, type OA4				
for 3-pole switches	OSD25P3	1SCA022192R9060	1	0.10
for 4-pole switches, fused neutral	OSD25P4	1SCA022196R9520	1	0.10
OS/OSM50GF_				
Auxiliary contacts (3 x C/O in 3-pole, 4 x C/O in 4-pole) included. Ratings: I_{th}: 5A, AC15: 0.15A/250VAC. NEMA 5A, 125-250 VAC, 1/10 HP				
for 3-pole switches	OSGD50P3	1SCA116401R1001	1	0.015
for 4-pole switches, fused neutral	OSGD50P4	1SCA115689R1001	1	0.020
OS/OSM125GF_				
Auxiliary contacts (3 x C/O in 3-pole, 4 x C/O in 4-pole) included. Ratings: I_{th}: 5A, AC15: 0.15A/250VAC. NEMA 5A, 125-250 VAC, 1/10 HP				
for 3-pole switches	OSGD125P3	1SCA115690R1001	1	0.025
for 4-pole switches, fused neutral	OSGD125P4	1SCA115692R1001	**1**	**0.035**
OS/OSM250D...800D				
Auxiliary contacts (3xNO + 3xNC in 3-pole and 4xNO + 4xNC in 4-pole) included. See the ratings on page 41, type OA1G_, OA3G_				
for 3-pole switches	OSZX3	1SCA101224R1001	1	0.15
for 4-pole switches, fused neutral	OSZX4	1SCA101225R1001	1	0.20

C/O = Change over contact

Locking / mounting accessories
Ordering information

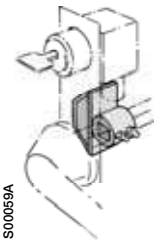
S00059A

OETLZW5

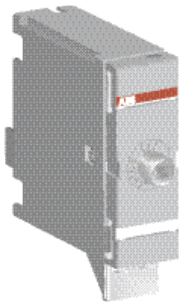
S04001

OSZT1_

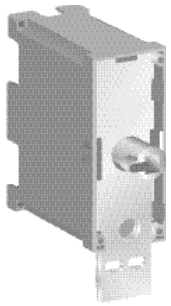
S04003

OSZT2...4_


S04005

PDAL2_


S07005

OSGZD1

Cam attachment

for Castell, Lowe & Fletcher and Ronis interlock
Cam attachment for adopting the switches to the interlock system. The interlock is not included.

Suitable for switches	Type	Order number	Units/ type [pcs]	Weight [kg]
OS16...250	OETLZW16	1SCA022095R2070	1	0.17
OS315...1250	OETLZW5	1SCA022052R3900	1	0.14

Mechanism interlock kits & Electrical interlocks

OS32G…1250 switch fuses can be interlocked in the OFF position using padlocks and by using a mechanical interlock kit mounted on the mechanism.
The diameter of the lock bail can be max 8 mm.
Note: The shaft must go through the interlock into the switch mechanism.

Suitable for switches	Type	Order number	Units/ type [pcs]	Weight [kg]
Interlocking in the OFF position				
OS32G...160G	OTZT1A	1SCA106522R1001	1	0.21
OS200 ... 250_	OSZT1A	1SCA106532R1001	1	0.32
OS315 ... 400_	OSZT2A	1SCA106534R1001	1	0.75
OS600 ...800_	OSZT3A	1SCA106535R1001	1	1.20
OS1200 ... 1250_	OSZT4A	1SCA106536R1001	1	2.00
Interlocking in the OFF & ON positions				
OS32G...160G	OTZT1L	1SCA106527R1001	1	0.21
OS200 ... 250_	OSZT1L	1SCA106538R1001	1	0.32
OS315 ... 400_	OSZT2L	1SCA106539R1001	1	0.75
OS600 ...800_	OSZT3L	1SCA106540R1001	1	1.20
OS1200 ... 1250_	OSZT4L	1SCA106541R1001	1	2.00

Coils

By installing a coil inside the housing of the interlock kit the switch can be interlocked electrically in the OFF position or both in the OFF and ON positions.
The electrical interlock works using the “closed circuit principle”, meaning that when the control voltage is not connected to the coil, the switches provided with A-type interlocks cannot be turned to the ON position and switches with L-type interlocks cannot be turned to the ON or OFF positions.

Suitable for switches	Type	Order number	Units/ type [pcs]	Weight [kg]
AC coils				
24 VAC, 60 Hz	PDAL2/24AC60Hz	1SCA111350R1001	1	0.15
110 VAC, 50Hz	PDAL2/110AC50Hz	1SCA106543R1001	1	0.15
110 VAC, 60Hz	PDAL2/110AC60Hz	1SCA107100R1001	1	0.15
120 VAC, 60 Hz	PDAL2/120AC60Hz	1SCA111353R1001	1	0.15
208 VAC, 60Hz	PDAL2/208AC60Hz	1SCA107101R1001	1	0.15
230 VAC, 50Hz	PDAL2/230AC50Hz	1SCA107102R1001	1	0.15
240 VAC, 60 Hz	PDAL2/240AC60Hz	1SCA111356R1001	1	0.15
DC coils				
24 VDC	PDAL2/24DC	1SCA106542R1001	1	0.15
48 VDC	PDAL2/48DC	1SCA107103R1001	1	0.15
60 VDC	PDAL2/60DC	1SCA107104R1001	1	0.15
110 VDC	PDAL2/110DC	1SCA107105R1001	1	0.15
125 VDC	PDAL2/125DC	1SCA111338R1001	1	0.15
220 VDC	PDAL2/220DC	1SCA112503R1001	1	0.15

Technical data for the coil

Operating voltage		U=0.7...1.1 x U_n
Operating ambient temperature		-40°C...+65°C
Power consumption	with AC	6.5 W
	with DC	9 VA

Mounting accessories

DIN-rail mounting kit
For mounting a switch fuse into 35 mm DIN-rail

Suitable for switches	Type	Order Number	Units/ type [pcs]	Weight [kg]
OS32G…160G, 1 - 4 -pole	OSGZD1	1SCA115688R1001	1	0.20

Front operated switch fuses
Dimension drawings

OS Mini

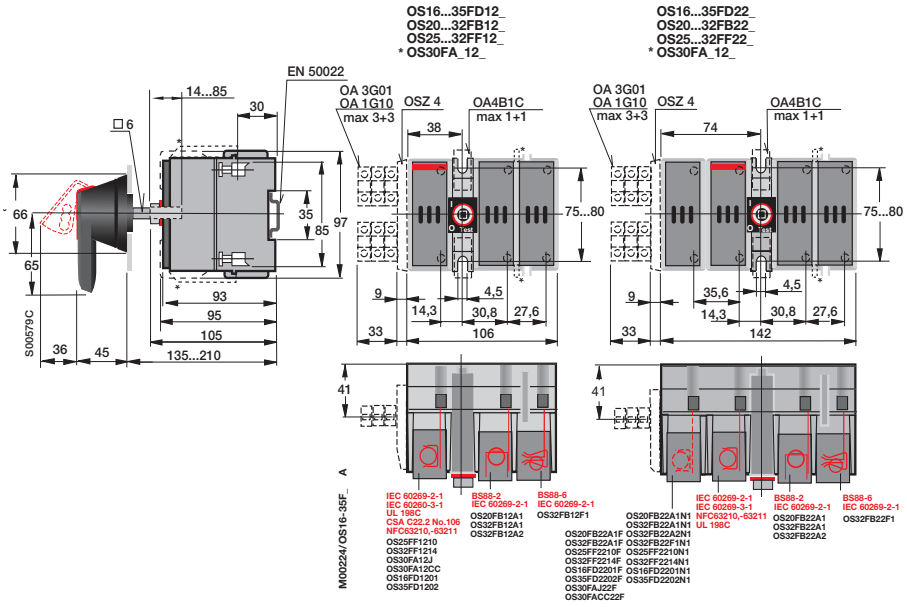

OS 40 Mini

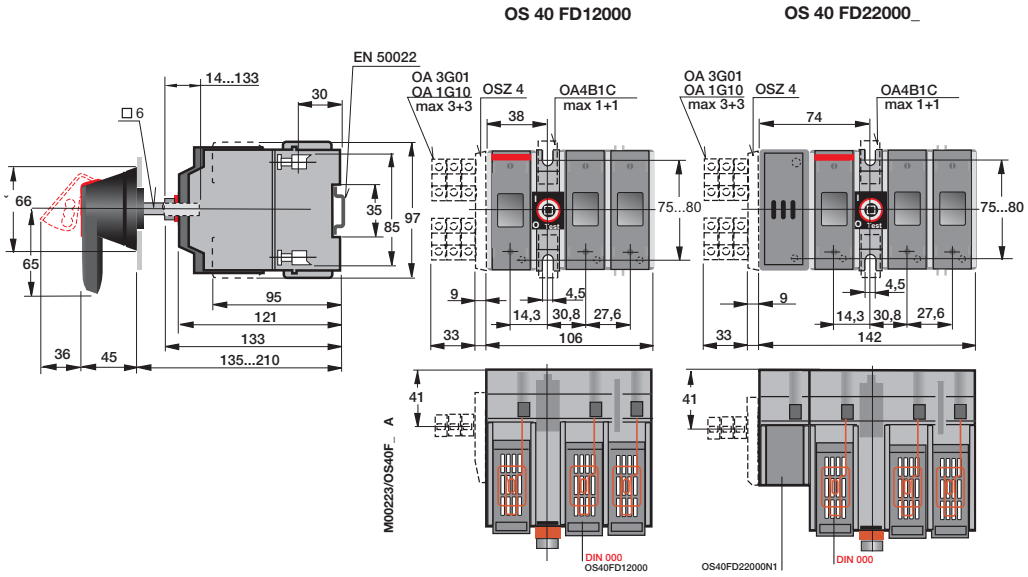

Front operated switch fuses
Dimension drawings

OS32...63G_P

Mechanism at the end of the switch fuse

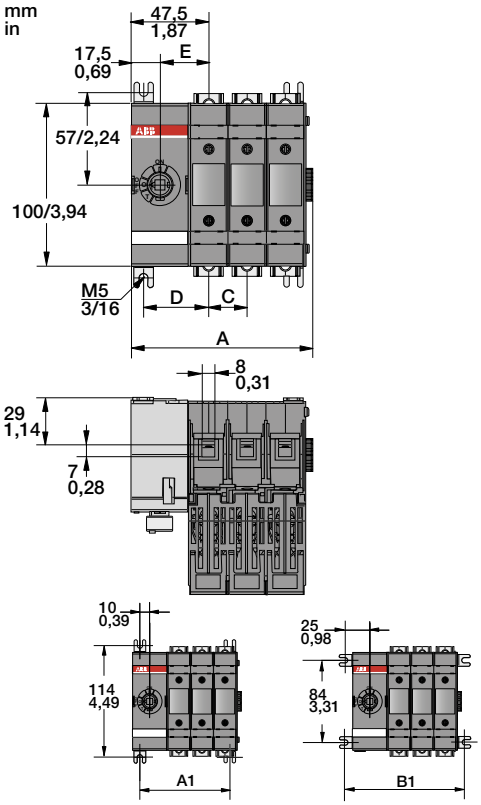

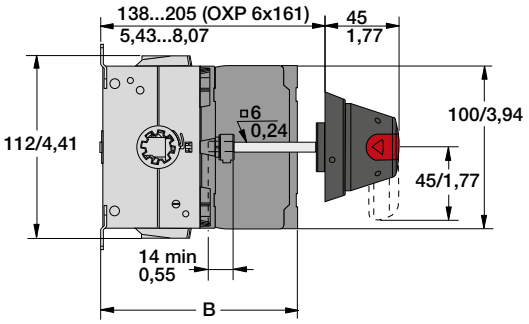

M00287/OS32-63G_01-04 A

	OS32-63GD				OS32-63GB/F				OS60GJ			
	mm				mm				mm / in			
	D01	D02	D03	D04	B/F01	B/F02	B/F03	B/F04	J01	J02	J03	J04
A	64,5	88	111,5	135,5	64,5	88	111,5	135,5	74,5/2,93	109,5/4,31	144,5/5,69	179,5/7,07
B	120,5	120,5	120,5	120,5	108,5	108,5	108,5	108,5	118/4,65	118/4,65	118/4,65	118/4,65
C	-	23,5	23,5	23,5	-	23,5	23,5	23,5	-	35/1,38	35/1,38	35/1,38
D	40	40	40	40	40	40	40	40	45,5/1,79	45,5/1,79	45,5/1,79	45,5/1,79
E	30	30	30	30	30	30	30	30	36/1,41	36/1,41	36/1,41	36/1,41
A1	45	68,5	92	111,5	45	68,5	92	111,5	51/2,01	86/3,39	121/4,76	156/6,14
B1	75	98,5	122	145,5	75	98,5	122	145,5	81/3,19	116/4,57	151/5,94	186/7,32

Mechanism between the poles

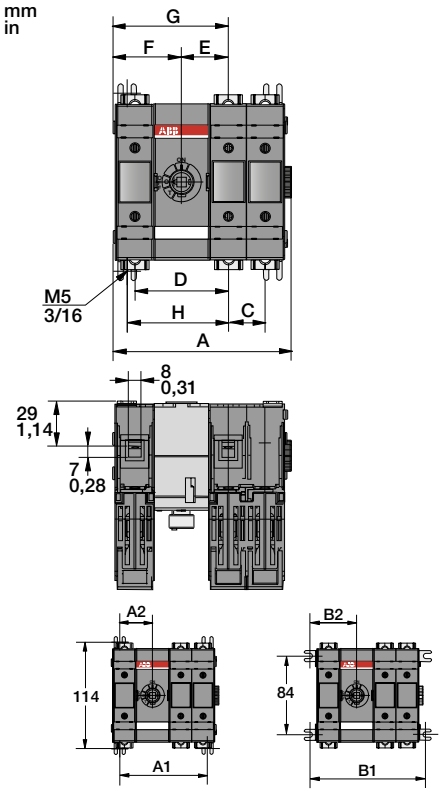

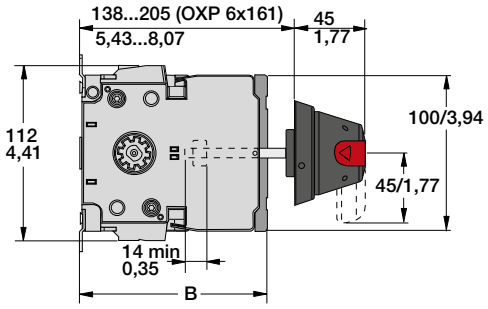

M00288/OS32-63G_11-22 A

	OS32-63GD				OS32-63GB/F				OS60GJ			
	mm				mm				mm / in			
	D11	D12	D13	D22	B/F11	B/F12	B/F13	B/F22	J11	J112	J13	J22
A	91	114,5	138	138	91	114,5	138	138	74,5/2,93	148/5,82	183,5/7,20	179,5/8,58
B	120,5	120,5	120,5	120,5	108,5	108,5	108,5	108,5	118/4,65	118/4,65	118/4,65	118/4,65
C	-	23,5	23,5	23,5	-	23,5	23,5	23,5	-	35/1,38	35/1,38	35/1,38
D	60	60	60	60	60	60	60	60	7 1,5/2,81	71,5/2,81	71,5/2,81	71,5/2,81
E	30	30	30	30	30	30	30	30	36/1,41	36/1,41	36/1,41	36/1,41
F	44	44	44	67,5	44	44	44	67,5	55,5/2,19	55,5/2,19	55,5/2,19	90,5/3,56
G	74	74	74	97,5	74	74	74	97,5	91,5/3,6	91,5/3,6	91,5/3,6	126,5/4,98
A1	70	93,5	117	117	70	93,5	117	117	81,5/3,21	116,5/4,59	151,5/5,96	151,5/5,96
A2	35	35	35	58,5	35	35	35	58,5	40,5/1,59	40,5/1,59	40,5/1,59	75,5/2,97
B1	75	123,5	147	147	75	123,5	147	147	111,5/4,39	146,5/5,77	181,5/7,15	181,5/7,15
B2	50	50	50	73,5	50	50	50	73,5	70,5/2,78	70,5/2,78	70,5/2,78	105,5/4,15

Front operated switch fuses
Dimension drawings

OS100...160G_P

Mechanism at the end of the switch fuse

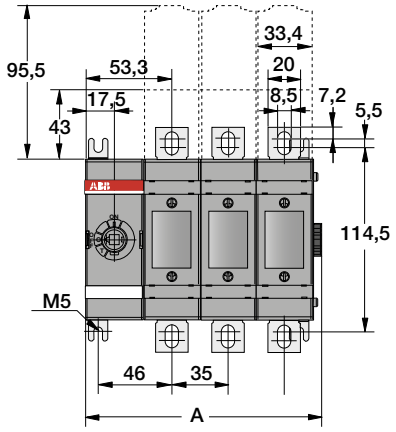

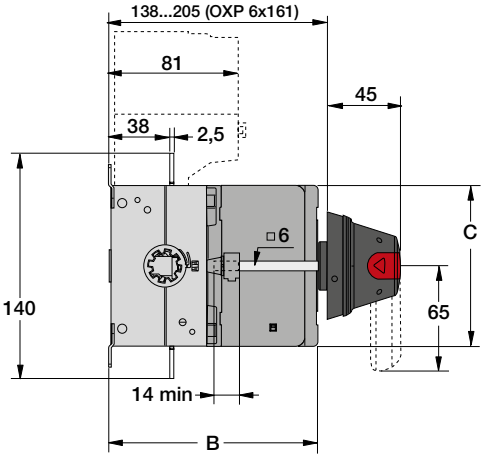

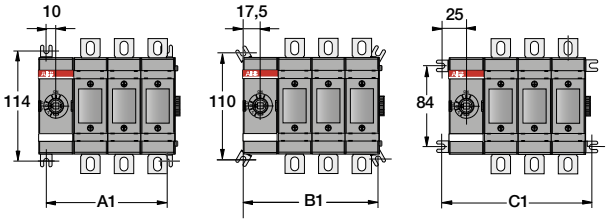

M00289/OS100-160G_01-04 A

	OS100-160GD/F				OS100-160GB			
	mm				mm			
	D/F01	D/F02	D/F03	D/F04	B01	B02	B03	B04
A	76,5	111,5	146,5	181,5	76,5	111,5	146,5	181,5
B	130	130	130	130	114,5	114,5	114,5	114,5
C	100	100	100	100	118	118	118	118
A1	55	90	125	160	55	90	125	160
B1	70	105	140	175	70	105	140	175
C1	85	120	155	190	85	120	155	190

Mechanism between the poles

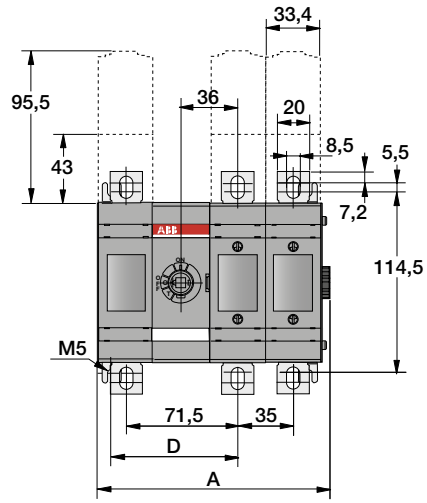

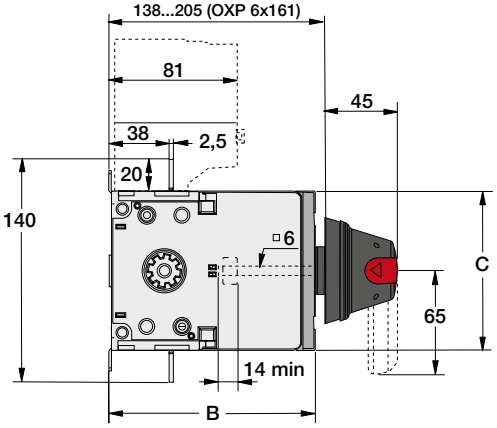

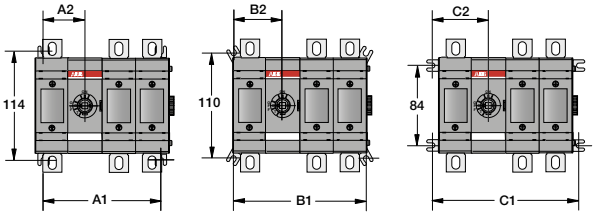

M00290/OS100-160G_11-22 A

	OS100-160GD/F				OS100-160GB			
	mm				mm			
	D/F11	D/F12	D/F13	D/F22	B11	B12	B13	B22
A	113	148	183	183	113	148	183	183
B	130	130	130	130	114,5	114,5	114,5	114,5
C	100	100	100	100	118	118	118	118
D	81	81	81	116	81	81	81	116
A1	90	125	160	160	90	125	160	160
A2	45	45	45	80	45	45	45	80
B1	105	140	175	175	105	140	175	175
B2	52,5	52,5	52,5	87,5	52,5	52,5	52,5	87,5
C1	120	155	190	190	120	155	190	190
C2	60	60	60	95	60	60	60	95

Front operated switch fuses
Dimension drawings

OS 200_P and OS 250_P

Mechanism at the end of the switch fuse

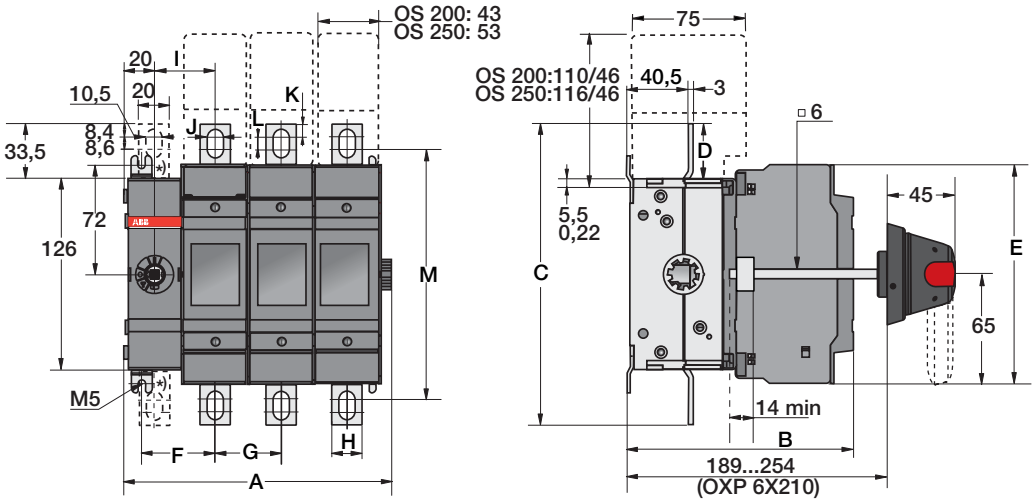

*) OS_N3

M00008/OS200_250_01_04 H

	OS200								OS250			
	D01	B01	D02	B02	D03	B03	D04	B04	D01/B01	D02/B02	D03/B03	D04/B04
A	89,5	89,5	133	133	176,5	176,5	220	220	99,5	153,5	207,5	261,5
B	149	130	149	130	149	130	149	149	154	154	154	154
C	198,5	198,5	198,5	198,5	198,5	198,5	198,5	198,5	193	193	193	193
D	36,5	36,5	36,5	36,5	36,5	36,5	36,5	36,5	33,5	33,5	33,5	33,5
E	144,5	144,5	144,5	144,5	144,5	144,5	144,5	144,5	148,5	148,5	148,5	148,5
F	48,5	48,5	48,5	48,5	48,5	48,5	48,5	48,5	53,5	53,5	53,5	53,5
G	-	-	43,5	43,5	43,5	43,5	43,5	43,5	-	54	54	54
H	20	20	20	20	20	20	20	20	25	25	25	25
I	40	40	40	40	40	40	40	40	45	45	45	45
J	10	10	10	10	10	10	10	10	11	11	11	11
K	8,4	8,4	8,4	8,4	8,4	8,4	8,4	8,4	11,5	11,5	11,5	11,5
L	8,6	8,6	8,6	8,6	8,6	8,6	8,6	8,6	4	4	4	4
M	164,5	164,5	164,5	164,5	164,5	164,5	164,5	164,5	162	162	162	162
A1	60,5	60,5	104	104	147,5	147,5	191	191	70,5	124,5	178,5	232,5
B1	79,5	79,5	123	123	166,5	166,5	210	210	89,5	143,5	197,5	251,5
C1	96,5	96,5	140	140	183,5	183,5	227	227	106,5	160,5	214,5	268,5

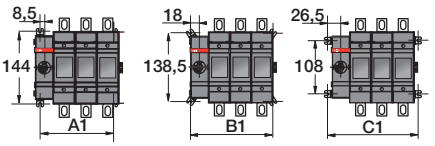

Mechanism between the poles

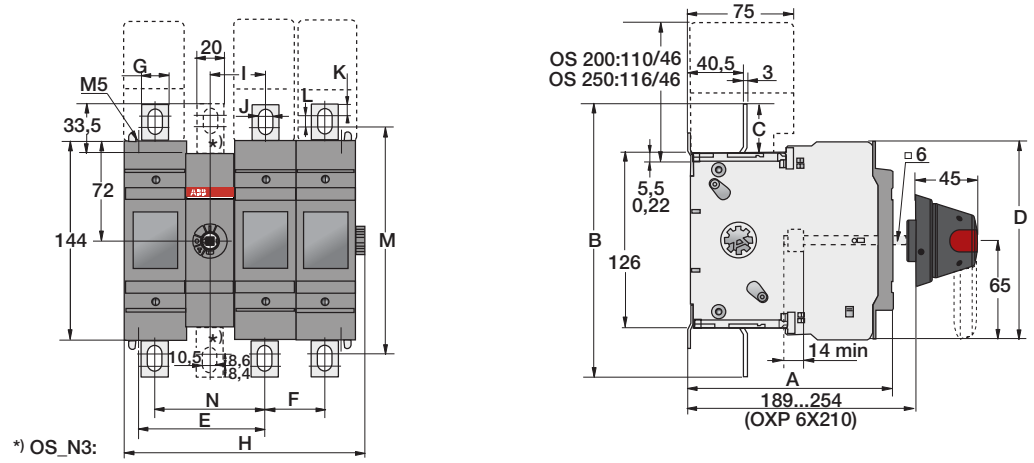

M00014/OS200_250_11_22 H

	OS200							OS250			
	D11	B11	D12	B12	D13	B13	D22	B22	D11	D12	D13	D22
A	149	130	149	130	141	130	149	130	154	154	154	154
B	199	199	199	199	199	199	199	199	193	193	193	193
C	36,5	36,5	36,3	36,5	36,5	36,5	36,5	36,5	33,5	33,5	33,5	33,5
D	144,5	144,5	144,5	144,5	144,5	144,5	144,5	144,5	148,5	148,5	148,5	148,5
E	92	92	92	92	92	92	135,5	135,5	112,5	112,5	112,5	161
F	43,5	43,5	43,5	43,5	43,5	43,5	43,5	43,5	54	54	54	54
G	20	20	20	20	20	20	20	20	25	25	25	25
H	132	132	175,5	175,5	219	219	219	219	152	206	260	260
I	40	40	40	40	40	40	40	40	45	45	45	45
J	10	10	10	10	10	10	10	10	11	11	11	11
K	8,4	8,4	8,4	8,4	8,4	8,4	8,4	8,4	11,5	11,5	11,5	11,5
L	8,6	8,6	8,6	8,6	8,6	8,6	8,6	8,6	4	4	4	4
M	165	165	165	165	165	165	165	165	162	162	162	162
N	80	80	80	80	80	80	80	80	90	90	90	90
A1	104	104	147,5	147,5	191	191	191	191	124	178	232	232
A2	52	52	52	52	52	52	95,5	95,5	62	62	62	116
B1	123	123	166,5	166,5	210	210	210	210	143	197	251	251
B2	61,5	61,5	61,5	61,5	61,5	61,5	105	105	71,5	71,5	71,5	125,5
C1	140	140	183,5	183,5	227	227	227	227	160	214	268	268
C2	70	70	70	70	70	70	113,5	113,5	80	80	80	134

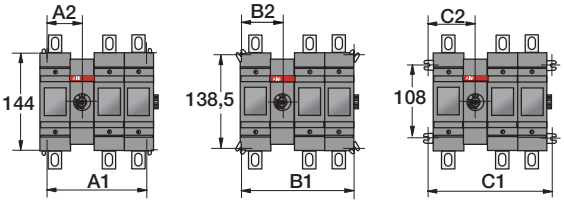

Front operated switch fuses
Dimension drawings

OS 315_P and OS 400_P

Mechanism at the end of the switch fuse

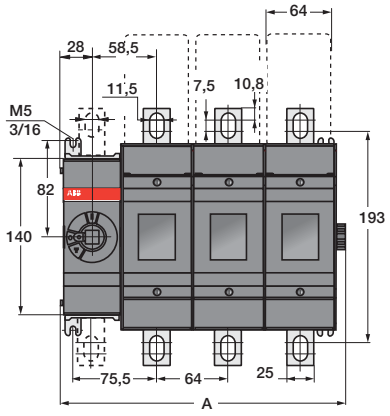

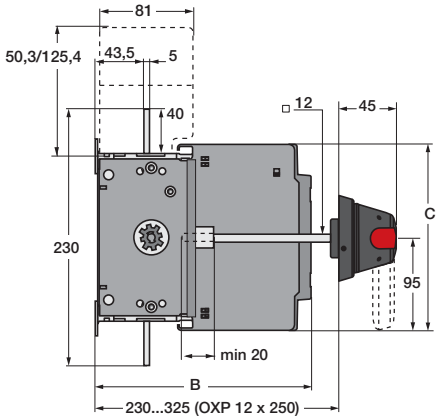

C000014 /OS315_400_001_04 A

	OS315				OS400							
	B01	B02	B03	B04	B01	B02	B03	B04	D01	D02	D03	D04
	mm	mm	mm	mm	mm	mm	mm	mm	mm	mm	mm	mm
A	127	191	255	319	127	191	255	319	127	191	255	319
B	176	176	176	176	176	176	176	176	193	193	193	193
C	194	194	194	194	194	194	194	194	166	166	166	166

	OS315				OS400			
	B01	B02	B03	B04	B01/D01	B02/D02	B03/D03	B04/D04
	mm	mm	mm	mm	mm	mm	mm	mm
A1	98.5	162.5	226.5	290.5	98.5	162.5	226.5	290.5
B1	116.5	180.5	244.5	308.5	116.5	180.5	244.5	308.5
C1	134.5	198.5	262.5	326.5	134.5	198.5	262.5	326.5

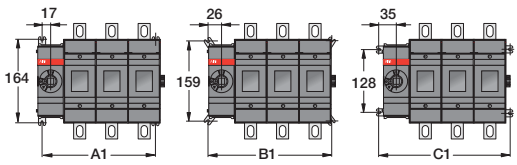

Mechanism between the poles

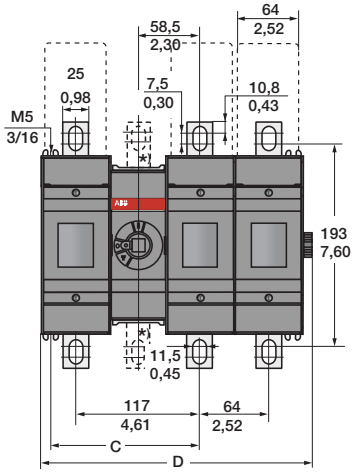

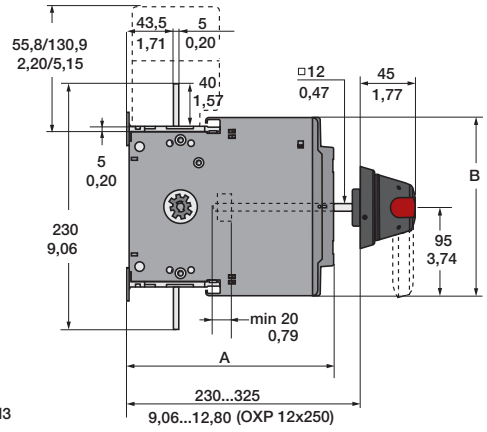

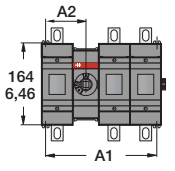

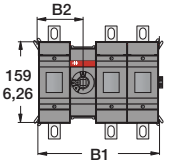

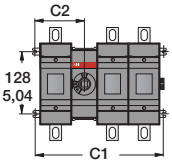

C000011/OS315-400_11_22 B

	OS315-400					OS400									
	B11	B12	B13	B21	B22	D11	D12	D13	D21	D22	J11	J12	J13	J21	J22
	mm	mm	mm	mm	mm	mm	mm	mm	mm	mm	mm/in	mm/in	mm/in	mm/in	mm/in
A	176	176	176	176	176	193	193	193	193	193	176 / 6,93	176 / 6,93	176 / 6,93	176 / 6,93	176 / 6,93
B	194	194	194	194	194	166	166	166	166	166	194 / 7,64	194 / 7,64	194 / 7,64	194 / 7,64	194 / 7,64
C	140	140	140	204	204	140	140	140	204	204	140 / 5,51	140 / 5,51	140 / 5,51	204 / 8,03	204 / 8,03
D	190	254	318	254	318	190	254	318	254	318	190 / 7,48	254 / 10,00	318 / 12,52	254 / 10,00	318 / 12,52

	OS315					OS400				
	B11	B12	B21	B22	B13	B11/D11/J11	B12/D12/J12	B21/D21/J21	B22/D22/J22	B13/D13/J13
	mm	mm	mm	mm	mm	mm/in	mm/in	mm/in	mm/in	mm/in
A1	163	227	227	291	291	163/6,42	227/8,94	227/8,94	291/11,46	291/11,46
A2	81.5	81.5	145.5	145.5	81.5	81,5/3.21	81,5/3.21	145,5/5,73	145,5/5,73	81,5/3.21
B1	181	245	245	309	309	181/7,13	245/9,65	245/9,65	309/12,17	309/12,17
B2	90.5	90.5	154.5	154.5	90.5	90,5/3,56	90,5/3,56	154,5/6,08	154,5/6,08	90,5/3,56
C1	199	263	263	327	327	199/7,83	263/10,35	263/10,35	327/12,87	327/12,87
C2	99.5	99.5	163.5	163.5	99.5	99,5/3,92	99,5/3,92	163,5/6,44	163,5/6,44	99,5/3,92

OS 630_P and OS 800_P

Mechanism at the end of the switch fuse

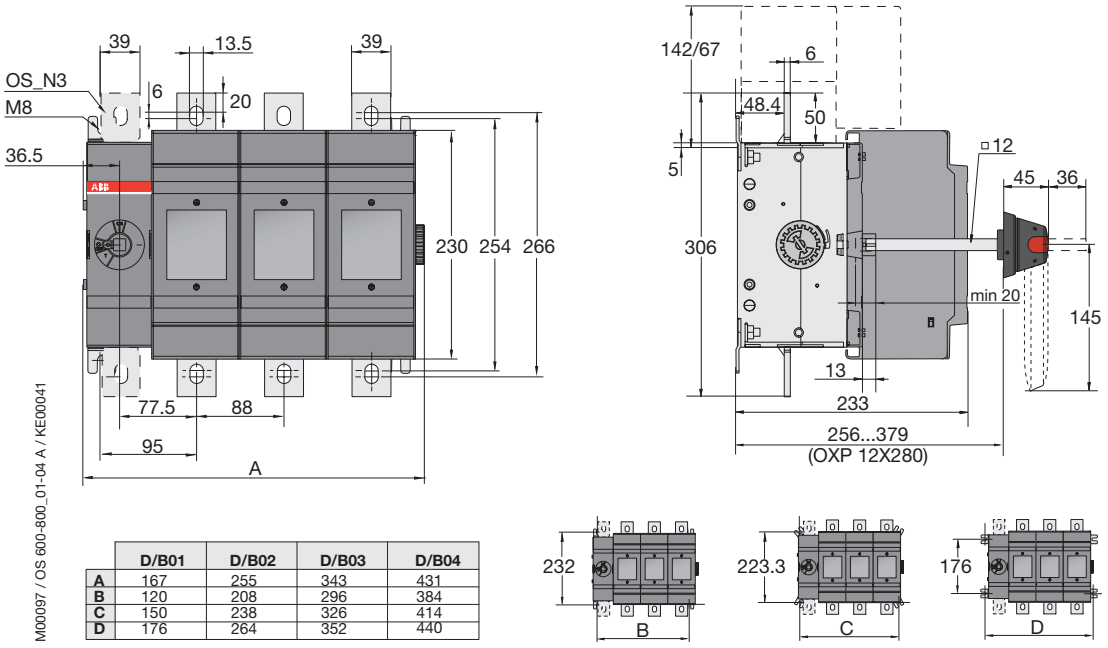

	D/B01	D/B02	D/B03	D/B04
A	167	255	343	431
B	120	208	296	384
C	150	238	326	414
D	176	264	352	440

Mechanism between the poles

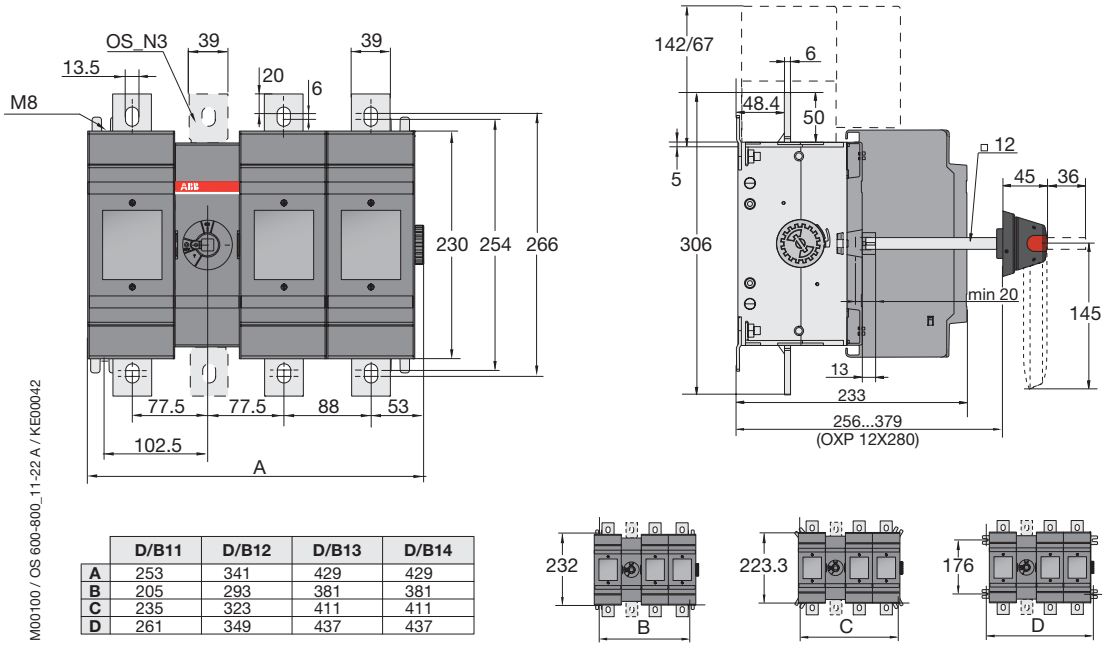

	D/B11	D/B12	D/B13	D/B14
A	253	341	429	429
B	205	293	381	381
C	235	323	411	411
D	261	349	437	437

Front operated switch fuses
Dimension drawings

OS 1250_P

Mechanism at the end of the switch fuse

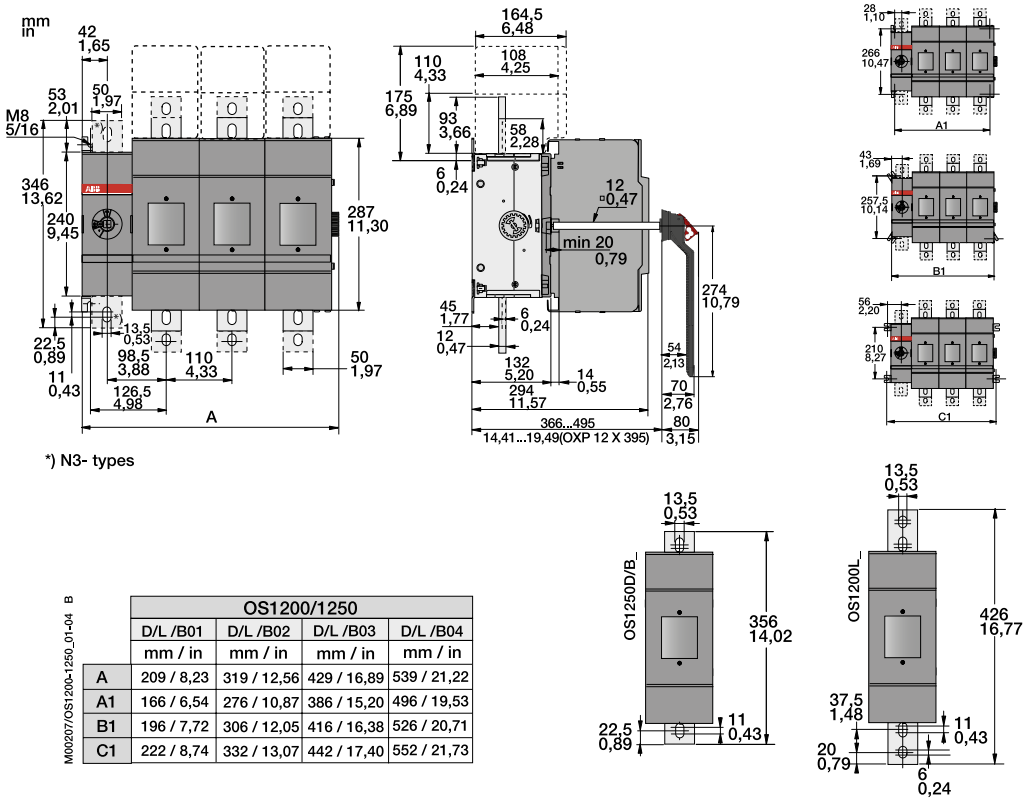

M00207/OS1200-1250_01-04 B

	OS1200/1250			
	D/L /B01	D/L /B02	D/L /B03	D/L /B04
	mm / in	mm / in	mm / in	mm / in
A	209 / 8,23	319 / 12,56	429 / 16,89	539 / 21,22
A1	166 / 6,54	276 / 10,87	386 / 15,20	496 / 19,53
B1	196 / 7,72	306 / 12,05	416 / 16,38	526 / 20,71
C1	222 / 8,74	332 / 13,07	442 / 17,40	552 / 21,73

Mechanism between the poles

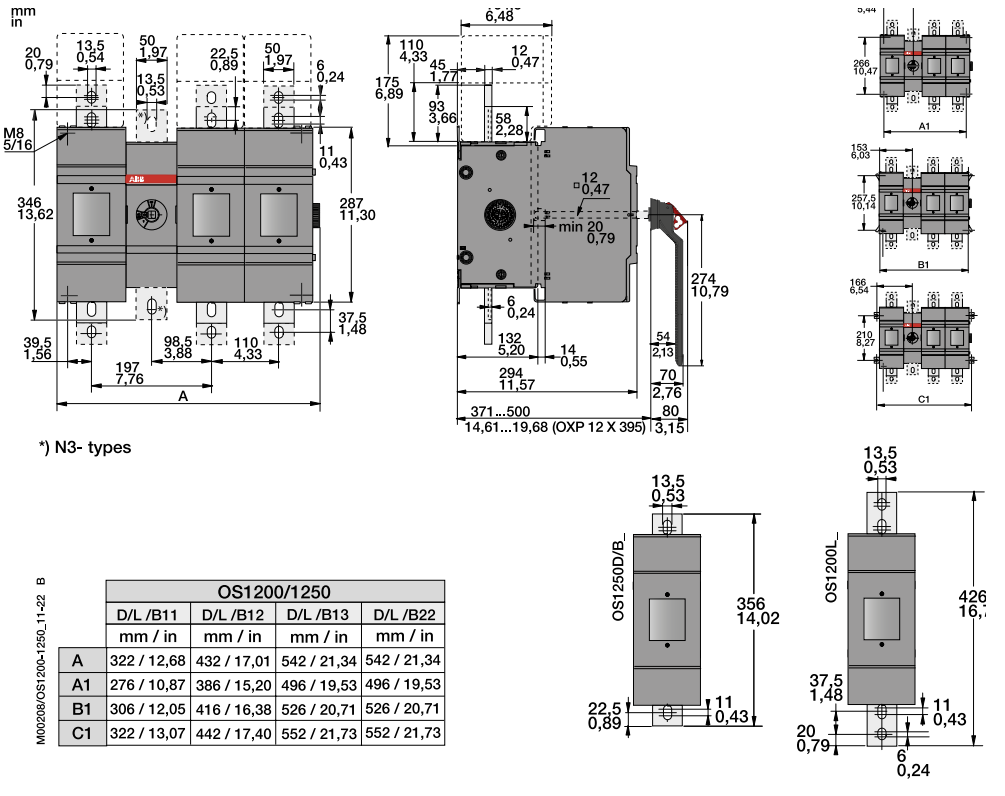

M00208/OS1200-1250_11-22 B

	OS1200/1250			
	D/L /B11	D/L /B12	D/L /B13	D/L /B22
	mm / in	mm / in	mm / in	mm / in
A	322 / 12,68	432 / 17,01	542 / 21,34	542 / 21,34
A1	276 / 10,87	386 / 15,20	496 / 19,53	496 / 19,53
B1	306 / 12,05	416 / 16,38	526 / 20,71	526 / 20,71
C1	322 / 13,07	442 / 17,40	552 / 21,73	552 / 21,73

Front operated switch fuses
Dimension drawings

OS100GJ_

Mechanism at the end of the switch fuse

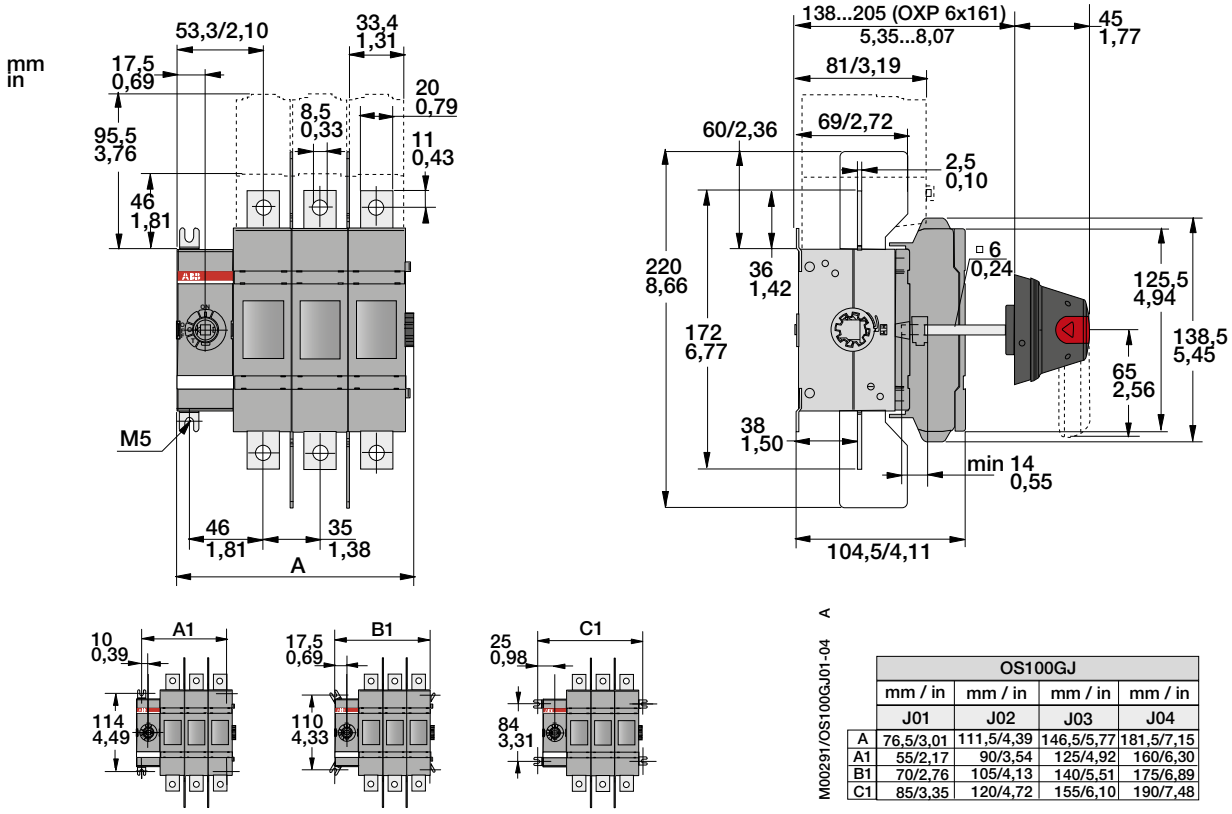

M00291/OS100GJ01-04 A

	OS100GJ			
	mm / in	mm / in	mm / in	mm / in
	J01	J02	J03	J04
A	76,5/3,01	111,5/4,39	146,5/5,77	181,5/7,15
A1	55/2,17	90/3,54	125/4,92	160/6,30
B1	70/2,76	105/4,13	140/5,51	175/6,89
C1	85/3,35	120/4,72	155/6,10	190/7,48

The measurements in the dimension drawings are preliminary and may be altered.

Mechanism between the poles

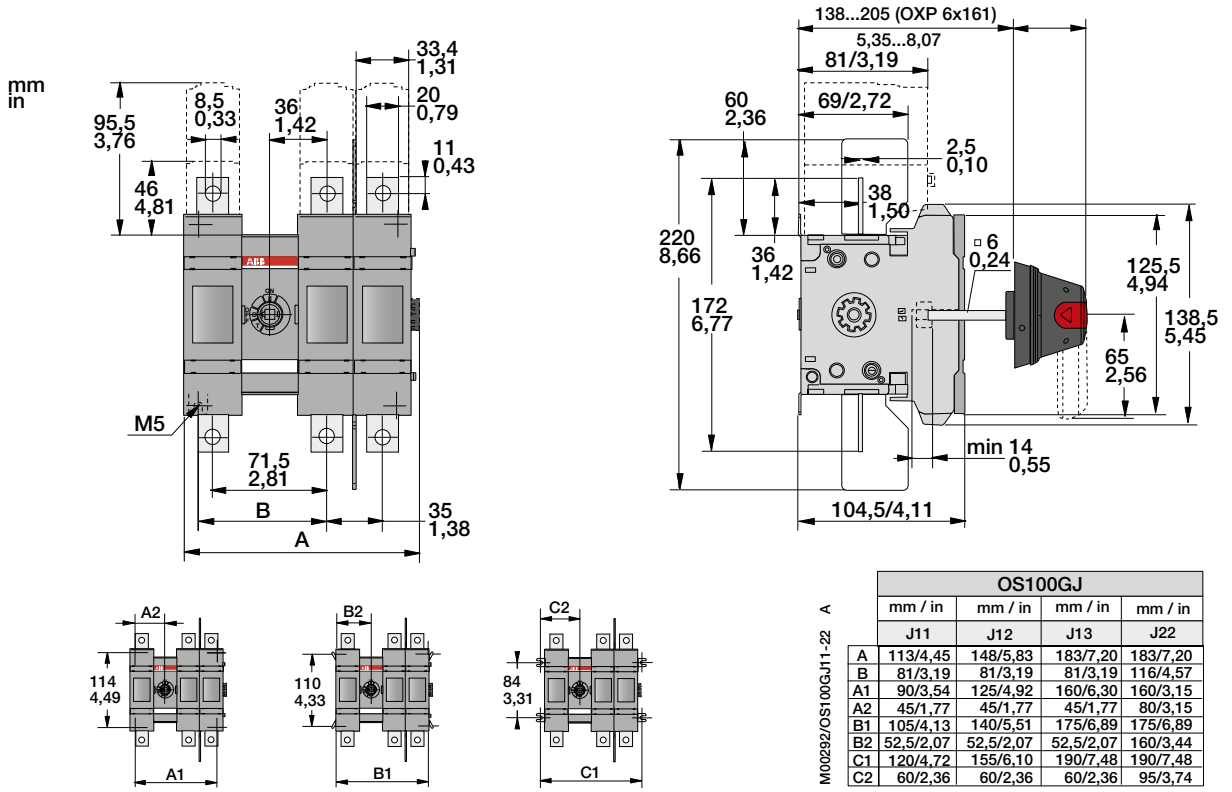

M00292/OS100GJ11-22 A

	OS100GJ			
	mm / in	mm / in	mm / in	mm / in
	J11	J12	J13	J22
A	113/4,45	148/5,83	183/7,20	183/7,20
B	81/3,19	81/3,19	81/3,19	116/4,57
A1	90/3,54	125/4,92	160/6,30	160/3,15
A2	45/1,77	45/1,77	45/1,77	80/3,15
B1	105/4,13	140/5,51	175/6,89	175/6,89
B2	52,5/2,07	52,5/2,07	52,5/2,07	160/3,44
C1	120/4,72	155/6,10	190/7,48	190/7,48
C2	60/2,36	60/2,36	60/2,36	95/3,74

Front operated switch fuses
Dimension drawings

OS 200J

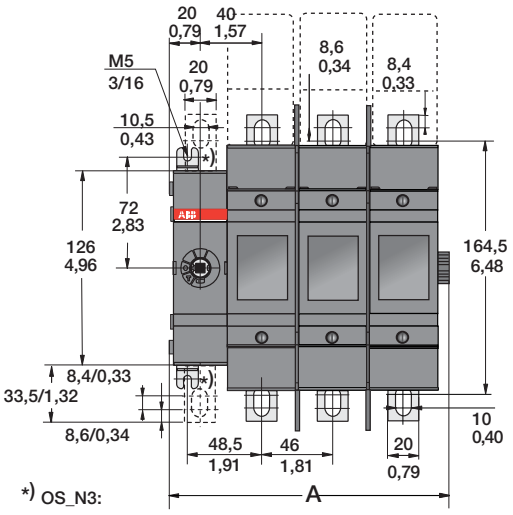

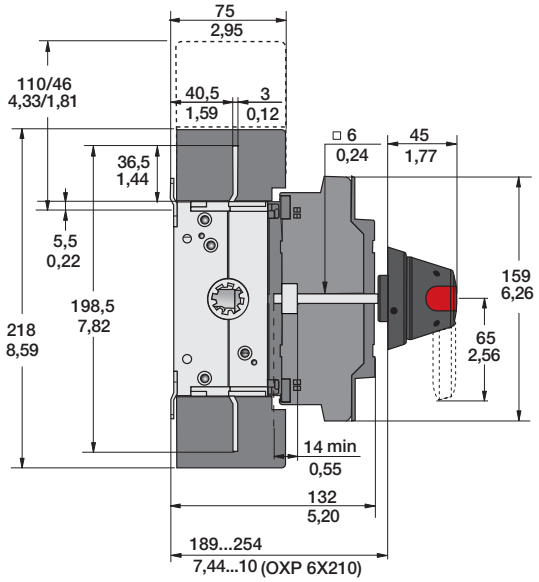

M00001/OS200J01_04 H

	OS200J01	OS200J02	OS200J03	OS200J04
	mm/ in	mm/ in	mm/ in	mm/ in
A	89,5 / 3,52	135,5 / 5,34	181,5 / 7,15	227,5 / 8,96
A1	60,5 / 2,38	106,5 / 4,19	152,5 / 6,00	198,5 / 7,82
B1	79,5 / 3,13	125,5 / 4,94	171,5 / 6,75	217,5 / 8,56
C1	96,5 / 3,80	142,5 / 5,61	188,5 / 7,42	234,5 / 9,23

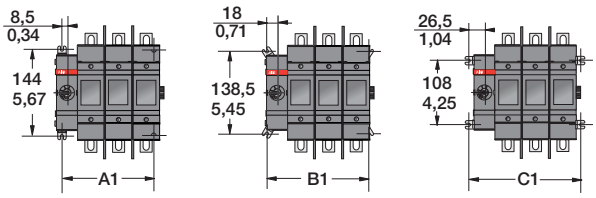

OS 400J

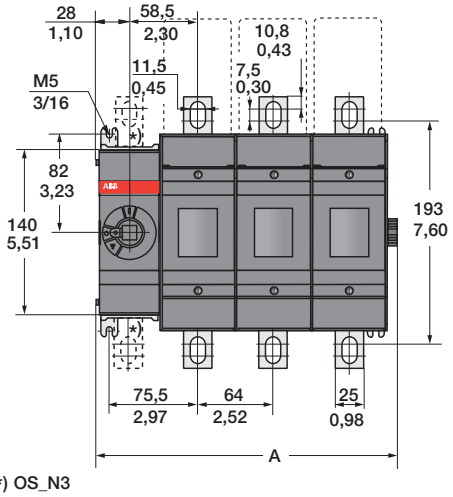

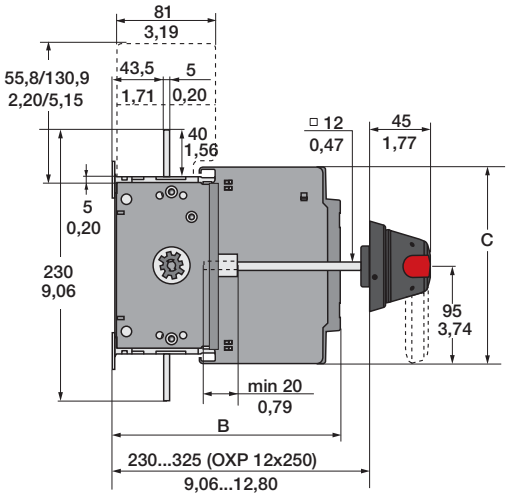

C000012 /OS315_400_01_04 B

	OS315 - 400				OS400							
	B01	B02	B03	B04	D01	D02	D03	D04	J01	J02	J03	J04
	mm	mm	mm	mm	mm	mm	mm	mm	mm/in	mm/in	mm/in	mm/in
A	127	191	255	319	127	191	255	319	127/5,00	191/7,52	255/10,04	319/12,56
B	176	176	176	176	193	193	193	193	176/6,93	176/6,93	176/6,93	176/6,93
C	194	194	194	194	166	166	166	166	194/7,64	194/7,64	194/7,64	194/7,64

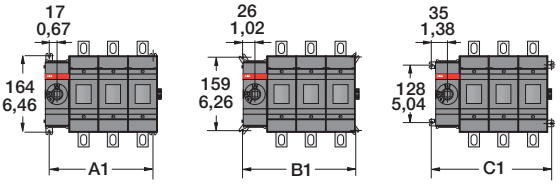

	OS315				OS400			
	B01	B02	B03	B04	B01/D01/J01	B02/D02/J02	B03/D03/J03	B04/D04/J04
	mm	mm	mm	mm	mm/in	mm/in	mm/in	mm/in
A1	98.5	162.5	226.5	290.5	98.5/3,88	162.5/6,40	226.5/8,92	290.5/11,44
B1	116.5	180.5	244.5	308.5	116.5/4,59	180.5/7,11	244.5/9,63	308.5/12,15
C1	134.5	198.5	262.5	326.5	134.5/5,30	198.5/7,81	262.5/10,33	326.5/12,85

Front operated switch fuses
Dimension drawings

OS 600J and 800L

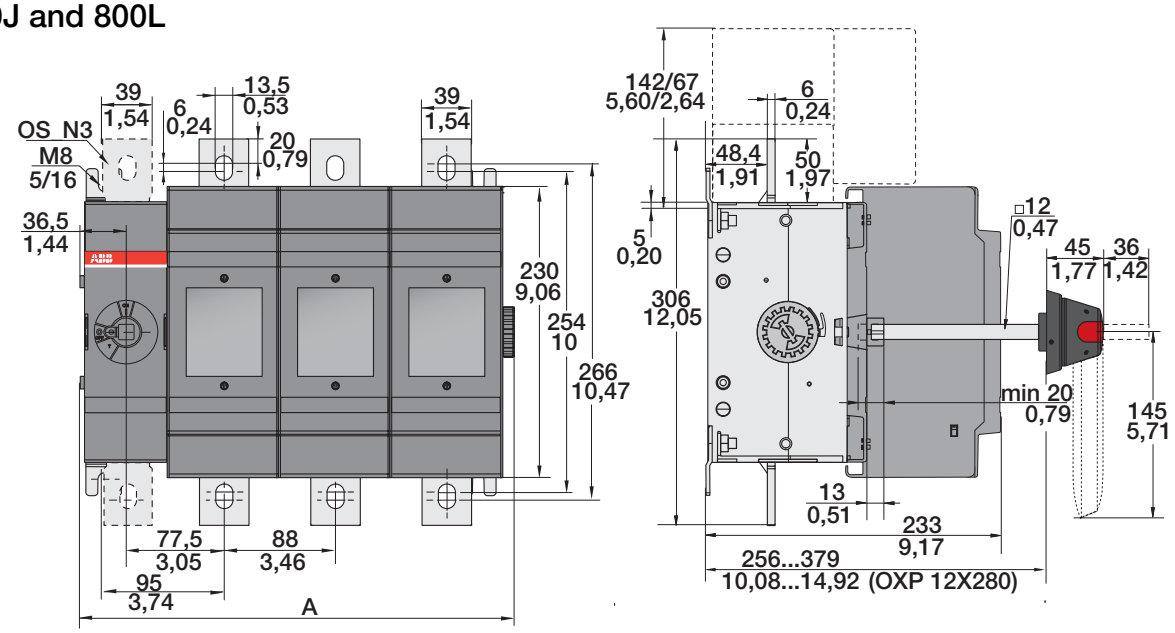

M00097 / OS 600-800_01-04 B

	D/B/J/L01	D/B/J/L02	D/B/J/L03	D/B/J/L04
A	167/6,57	255/10,04	343/13,50	431/16,97
B	120/4,72	208/8,19	296/11,65	384/15,12
C	150/5,91	238/9,37	326/12,83	414/16,30
D	176/6,93	264/10,39	352/13,86	440/17,32

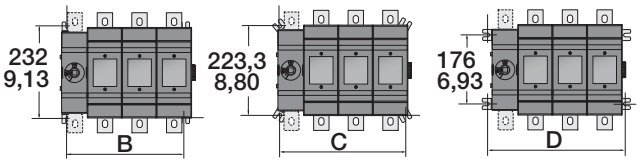

OS 1200L

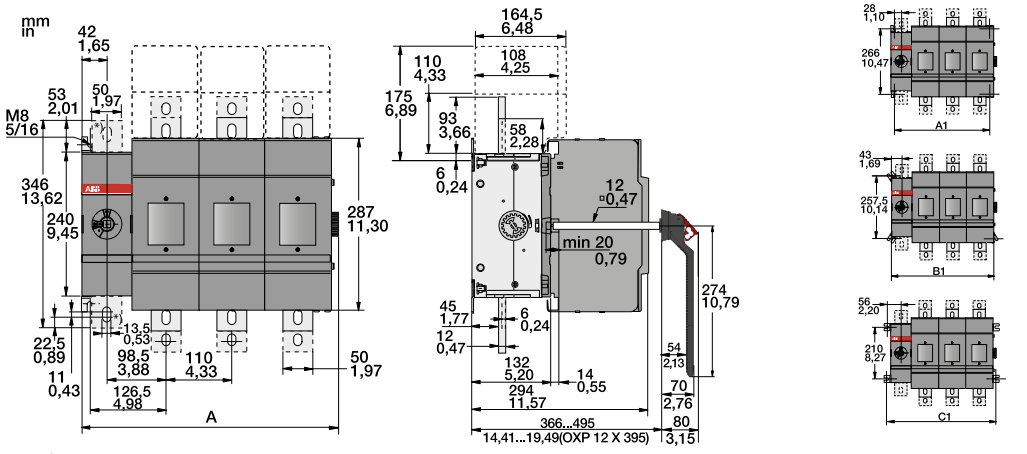

*) N3- types

M00207/OS1200-1250_01-04 B

	OS1200/1250			
	D/L /B01	D/L /B02	D/L /B03	D/L /B04
	mm / in	mm / in	mm / in	mm / in
A	209 / 8,23	319 / 12,56	429 / 16,89	539 / 21,22
A1	166 / 6,54	276 / 10,87	386 / 15,20	496 / 19,53
B1	196 / 7,72	306 / 12,05	416 / 16,38	526 / 20,71
C1	222 / 8,74	332 / 13,07	442 / 17,40	552 / 21,73

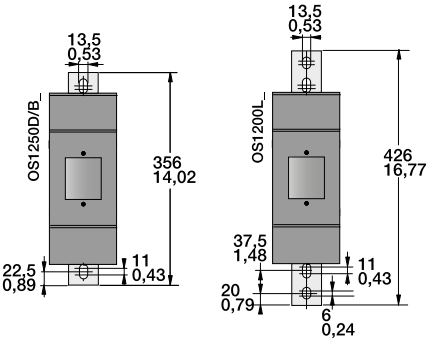

Front operated switch fuses with direct mounted handles
Dimensional drawings

OS32G_K...OS160G_K

OS32G_K, OS63G_K

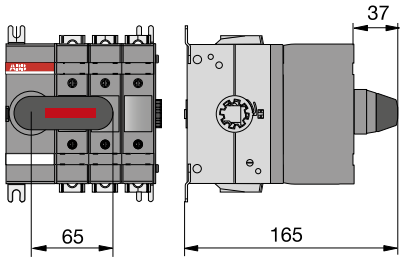

OS100G_K, OS160G_K

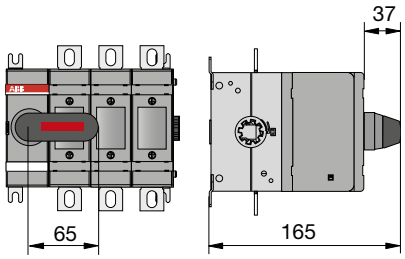

OS 200_K and OS 250_K

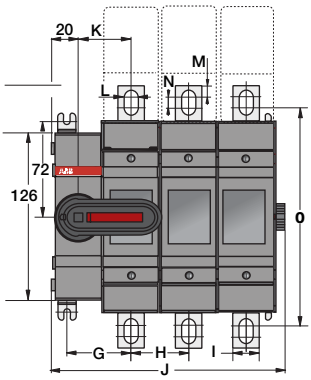

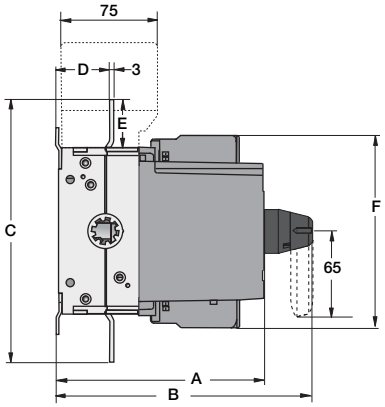

M00080/OS 200_250_01_04K C

	OS200_K								OS250_K			
	D01	B01	D02	B02	D03	B03	D04	B04	D01/B01	D02/B02	D03/B03	D04/B04
A	154	130	154	130	154	130	154	130	154	154	154	154
B	191	167	191	167	191	167	191	167	191	191	191	191
C	198,5	198,5	198,5	198,5	198,5	198,5	198,5	198,5	193	193	193	193
D	40,5	40,5	40,5	40,5	40,5	40,5	40,5	40,5	40,5	40,5	40,5	40,5
E	36,5	36,5	36,5	36,5	36,5	36,5	36,5	36,5	33,5	33,5	33,5	33,5
F	144,5	144,5	144,5	144,5	144,5	144,5	144,5	144,5	148,5	148,5	148,5	148,5
G	48,5	48,5	48,5	48,5	48,5	48,5	48,5	48,5	53,5	53,5	53,5	53,5
H	-	-	43,5	43,5	43,5	43,5	43,5	43,5	-	54	54	54
I	20	20	20	20	20	20	20	20	25	25	25	25
J	89,5	89,5	133	133	176,5	176,5	220	220	99,5	153,5	207,5	261,5
K	40	40	40	40	40	40	40	40	45	45	45	45
L	10	10	10	10	10	10	10	10	11	11	11	11
M	8,5	8,5	8,5	8,5	8,5	8,5	8,5	8,5	11,5	11,5	11,5	11,5
N	8,5	8,5	8,5	8,5	8,5	8,5	8,5	8,5	4	4	4	4
O	164,5	164,5	164,5	164,5	164,5	164,5	164,5	164,5	162	162	162	162

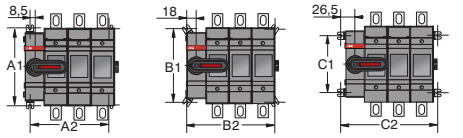

	OS200K				OS250K			
	D01/B01	D02/B02	D03/B03	D04/B04	D01	D02	D03	D04
A1	144	144	144	144	144	144	144	144
A2	60,5	104	147,5	191	70,5	124,5	178,5	232,5
B1	138,5	138,5	138,5	138,5	138,5	138,5	138,5	138,5
B2	79,5	123	166,5	210	89,5	143,5	197,5	251,5
C1	108	108	108	108	108	108	108	108
C2	96,5	140	183,5	227	106,5	160,5	214,5	268,5

OS 315_K and OS 400_K

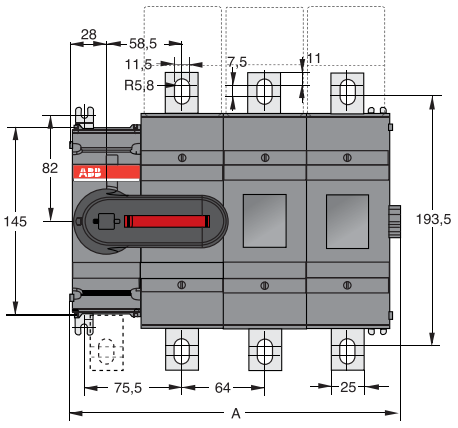

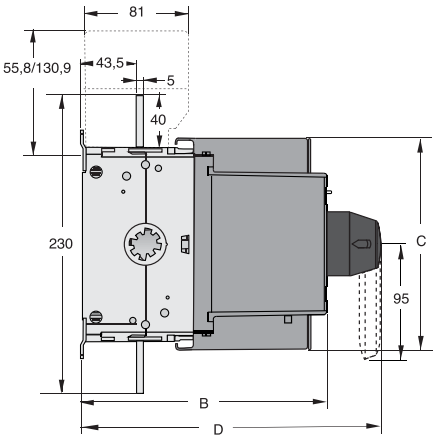

M00081/OS315-400_01_04K B

	OS315, OS400				OS400			
	B01K	B02K	B03K	B04K	D01K	D02K	D03K	D04K
A	127	191	255	319	127	191	255	319
B	176	176	176	176	193	193	193	193
C	194	194	194	194	166	166	166	166
D	219	219	219	219	236	236	236	236

	OS315, OS400				OS400			
	B01K	B02K	B03K	B04K	D01K	D02K	D03K	D04K
A1	98,5	162,5	226,5	290,5	98,5	162,5	226,5	290,5
B1	116,5	180,5	244,5	308,5	116,5	180,5	244,5	308,5
C1	134,5	198,5	262,5	326,5	134,5	198,5	262,5	326,5

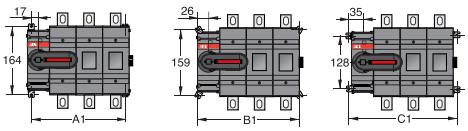

Front operated switch fuses with direct mounted handles
Dimensional drawings

OS 600/630_K and OS 800_K

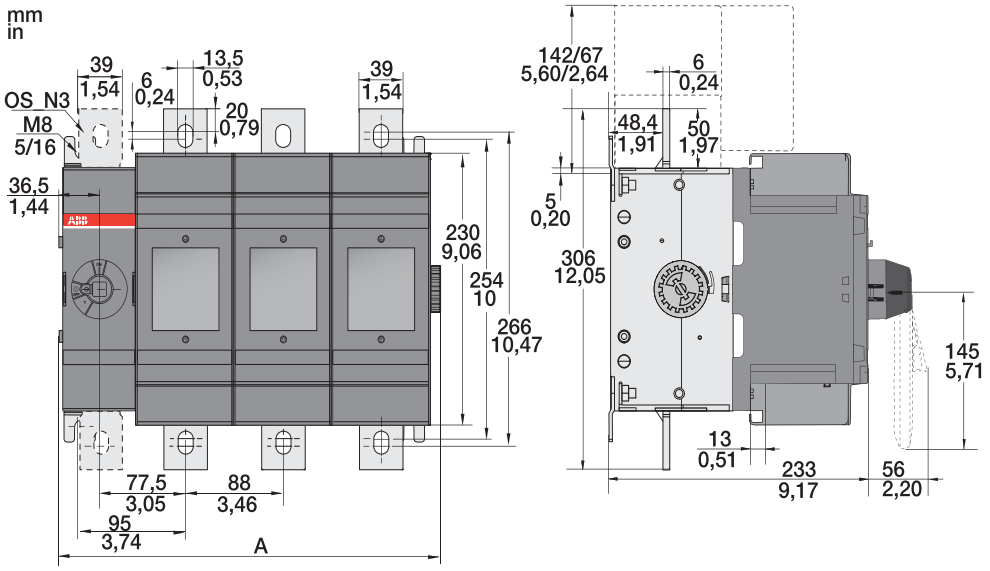

M00229 / OS 600-800_01-04K A

	D/B/J/L01	D/B/J/L02	D/B/J/L03	D/B/J/L04
A	167/6,57	255/10,04	343/13,50	431/16,97
B	120/4,72	208/8,19	296/11,65	384/15,12
C	150/5,91	238/9,37	326/12,83	414/16,30
D	176/6,93	264/10,39	352/13,86	440/17,32

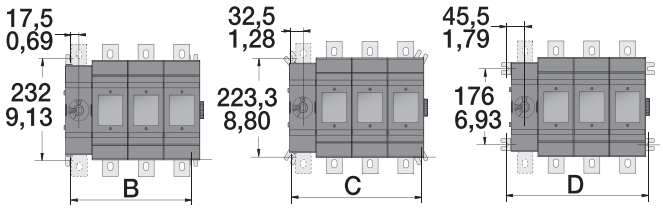

OS 1200/1250_K

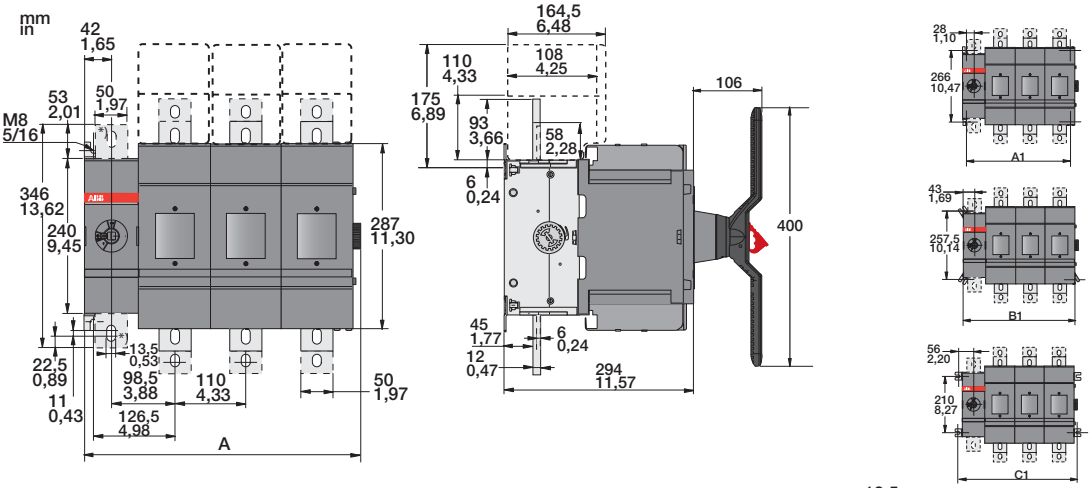

*) N3- types

M00231 / OS1200-1250_01-04K A

	OS1200/1250			
	D/L /B01	D/L /B02	D/L /B03	D/L /B04
	mm / in	mm / in	mm / in	mm / in
A	209 / 8,23	319 / 12,56	429 / 16,89	539 / 21,22
A1	166 / 6,54	276 / 10,87	386 / 15,20	496 / 19,53
B1	196 / 7,72	306 / 12,05	416 / 16,38	526 / 20,71
C1	222 / 8,74	332 / 13,07	442 / 17,40	552 / 21,73

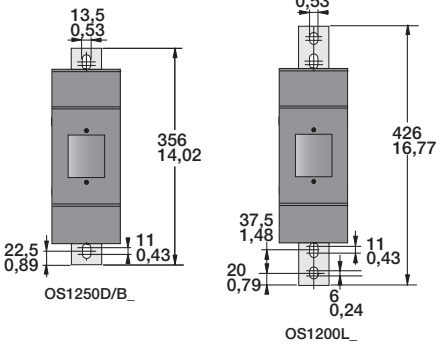

Side operated switch fuses
Dimension drawings

OS Mini

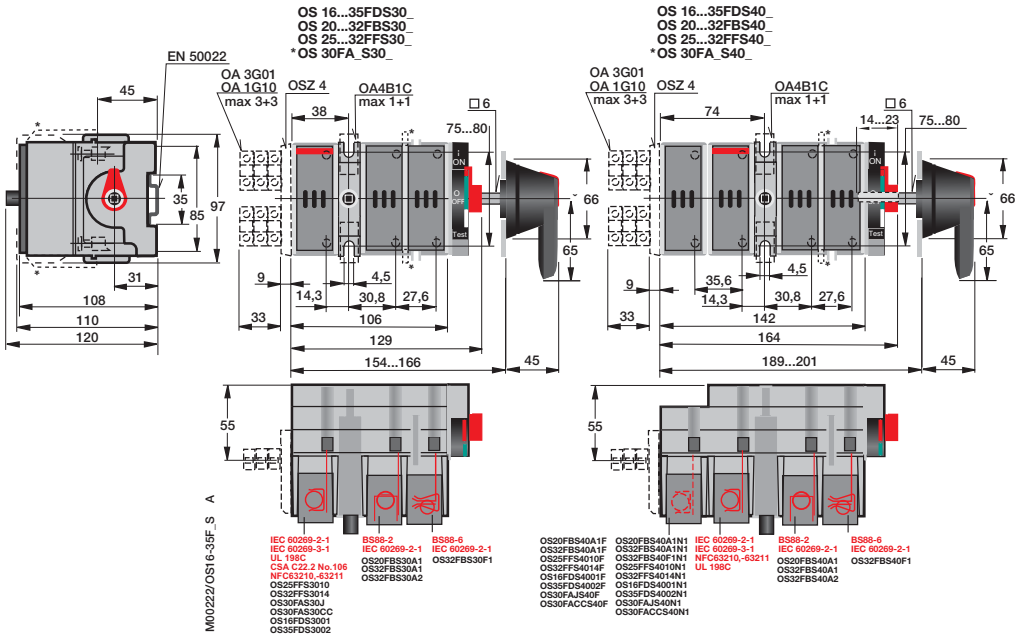

OS 40 Mini

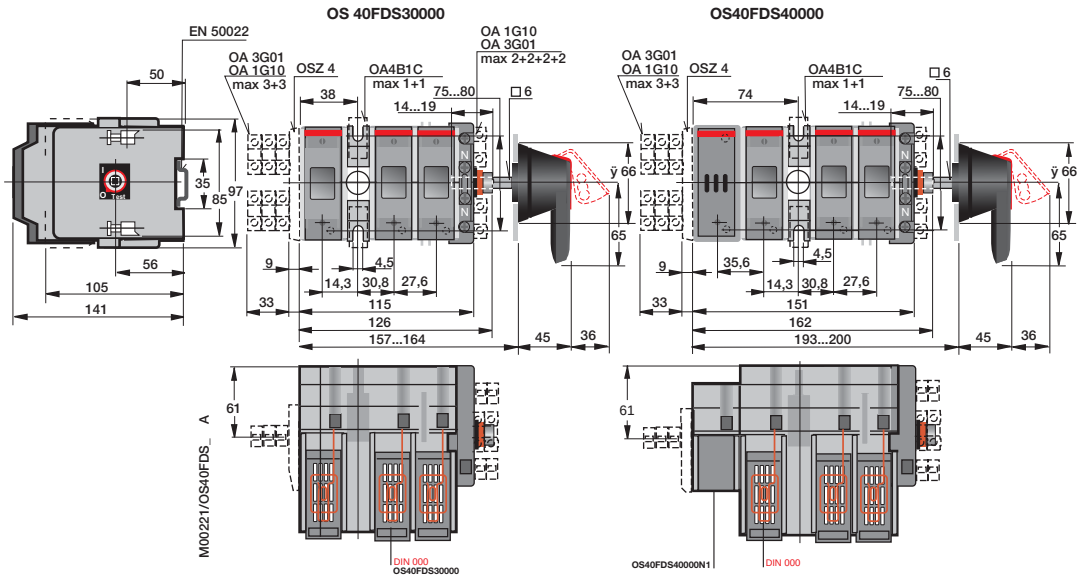

Side operated switch fuses
Dimension drawings

OS32G...63G_S_

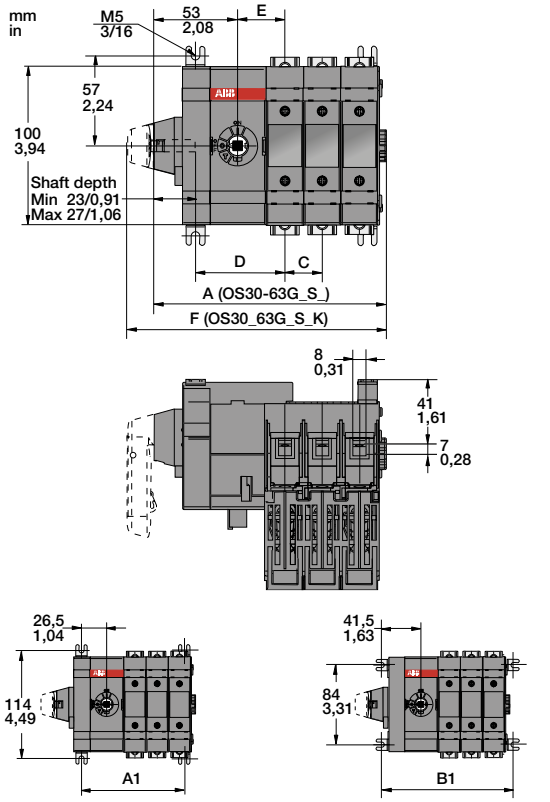

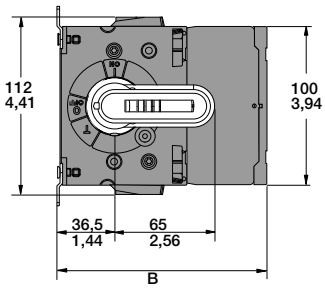

M00296/OS30_63G_01_04S A

	OS32-63G_ mm								OS60G_ mm/ in			
	DS01	DS02	DS03	DS04	B/FS01	B/FS02	B/FS03	B/FS04	JS01	JS02	JS03	JS04
A	99,5	123	146,5	170	99,5	123	146,5	170	109,5/4,31	144,5/5,69	179,5/7,07	214,5/8,44
B	132,5	132,5	132,5	132,5	120,5	120,5	120,5	120,5	130/5,12	130/5,12	130/5,12	130/5,12
C	-	23,5	23,5	23,5	-	23,5	23,5	23,5	-	35/1,38	35/1,38	35/1,38
D	56,5	56,5	56,5	56,5	56,5	56,5	56,5	56,5	62/2,44	62/2,44	62/2,44	62/2,44
E	30	30	30	30	30	30	30	30	36/1,41	36/1,41	36/1,41	36/1,41
F	116,5	140	163,5	187	116,5	140	163,5	187	126,5/4,98	161,5/6,36	196,5/7,74	231,5/9,11
A1	61,5	85	108,5	132	61,5	85	108,5	132	67,5/2,66	102,5/4,04	137,5/5,41	172,5/6,79
B1	91,5	115	138,5	162,5	91,5	115	138,5	162,5	37,5/1,48	72,5/2,85	107,5/4,23	142,5/5,61

OS100G...160G_S_

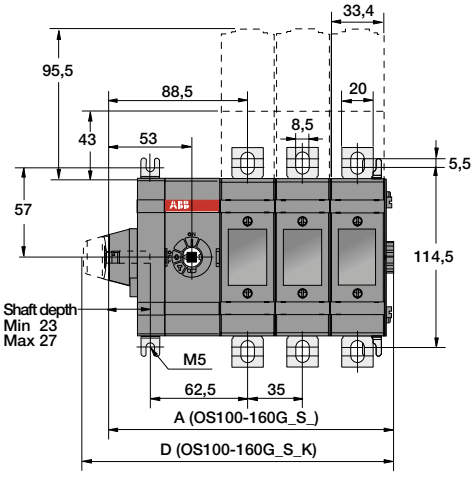

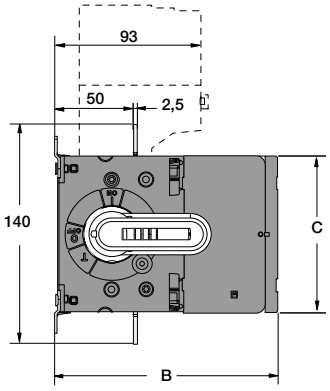

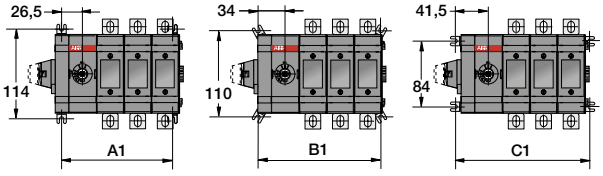

M00298/OS100_160G_S01_04 A

	OS100-160G mm							
	D/F01	D/F02	D/F03	D/F04	B01	B02	B03	B04
A	111,5	146,5	181,5	216,5	111,5	146,5	181,5	216,5
B	142	142	142	142	126,5	126,5	126,5	126,5
C	100	100	100	100	118	118	118	118
D	128,5	163,5	198,5	233,5	128,5	163,5	198,5	233,5
A1	71,5	106,5	141,5	176,5	71,5	106,5	141,5	176,5
B1	86,5	121,5	156,5	191,5	86,5	121,5	156,5	191,5
C1	101,5	136,5	171,5	206,5	101,5	136,5	171,5	206,5

Side operated switch fuses
Dimension drawings

OS100GJS

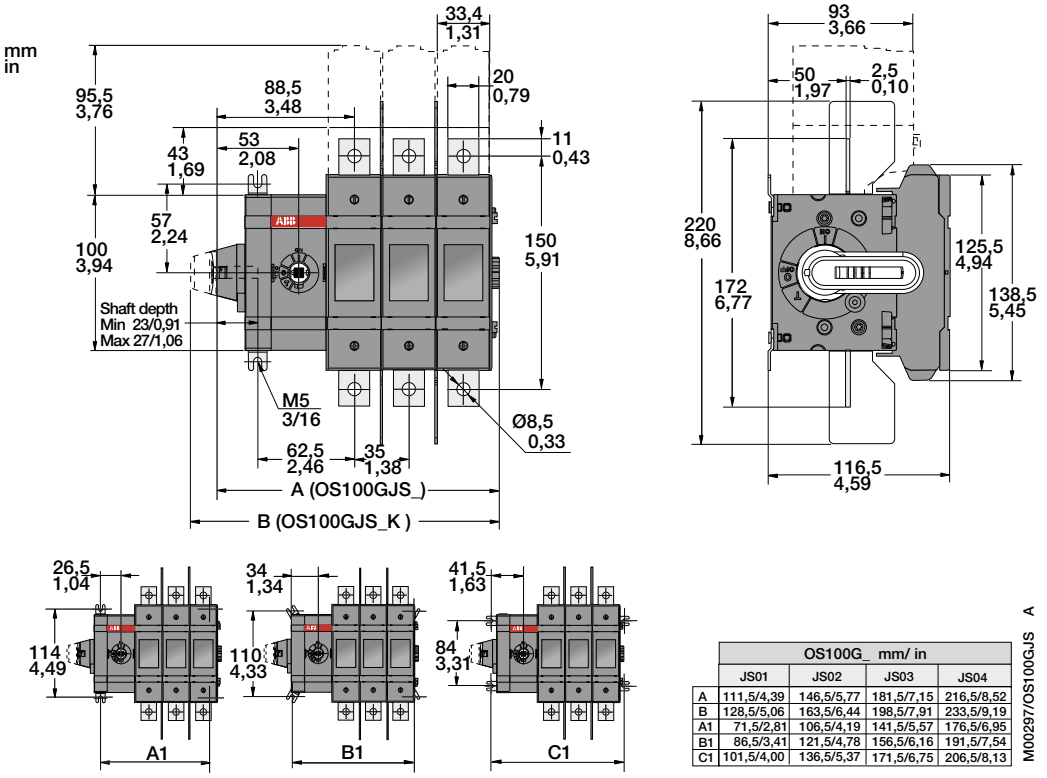

OS100G_ mm/ in				
	JS01	JS02	JS03	JS04
A	111,5/4,39	146,5/5,77	181,5/7,15	216,5/8,52
B	128,5/5,06	163,5/6,44	198,5/7,91	233,5/9,19
A1	71,5/2,81	106,5/4,19	141,5/5,57	176,5/6,95
B1	86,5/3,41	121,5/4,78	156,5/6,16	191,5/7,54
C1	101,5/4,00	136,5/5,37	171,5/6,75	206,5/8,13

M00297/OS100GJS A

OS 200...400_S_

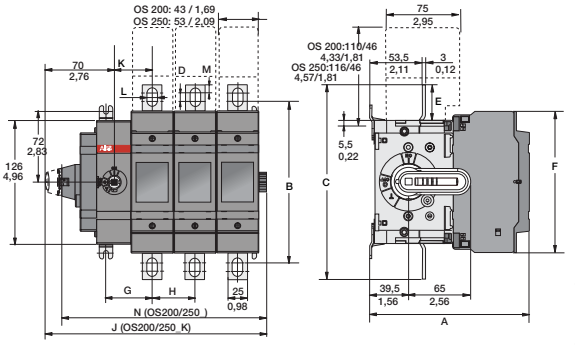

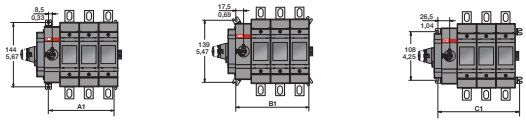

	OS200_, OS200_K														OS250_, OS250_K							
	DS01		BS01		DS02		BS02		DS03		BS03		DS04		BS04		DS01		DS02		DS03		DS04	
A	149,0	5,87	130,0	5,12	149,0	5,87	130,0	5,12	149,0	5,87	130,0	5,12	149,0	5,87	149,0	5,87	154,0	6,06	154,0	6,06	154,0	6,06	154,0	6,06
B	164,5	6,48	164,5	6,48	164,5	6,48	164,5	6,48	164,5	6,48	164,5	6,48	164,5	6,48	164,5	6,48	162,0	6,38	162,0	6,38	162,0	6,38	162,0	6,38
C	198,5	7,81	198,5	7,81	198,5	7,81	198,5	7,81	198,5	7,81	198,5	7,81	198,5	7,81	198,5	7,81	193,0	7,60	193,0	7,60	193,0	7,60	193,0	7,60
D	8,5	0,33	8,5	0,33	8,5	0,33	8,5	0,33	8,5	0,33	8,5	0,33	8,5	0,33	8,5	0,33	4,0	0,16	4,0	0,16	4,0	0,16	4,0	0,16
E	36,5	1,44	36,5	1,44	36,5	1,44	36,5	1,44	36,5	1,44	36,5	1,44	36,5	1,44	36,5	1,44	33,5	1,32	33,5	1,32	33,5	1,32	33,5	1,32
F	144,5	5,69	144,5	5,69	144,5	5,69	144,5	5,69	144,5	5,69	144,5	5,69	144,5	5,69	144,5	5,69	148,5	5,85	148,5	5,85	148,5	5,85	148,5	5,85
G	48,5	1,91	48,5	1,91	48,5	1,91	48,5	1,91	48,5	1,91	48,5	1,91	48,5	1,91	48,5	1,91	53,5	2,11	53,5	2,11	53,5	2,11	53,5	2,11
H	-	-	-	-	-	-	43,5	1,71	43,5	1,71	43,5	1,71	43,5	1,71	43,5	1,71	-	-	54,0	2,13	54,0	2,13	54,0	2,13
I	20,0	0,79	20,0	0,79	20,0	0,79	20,0	0,79	20,0	0,79	20,0	0,79	20,0	0,79	20,0	0,79	25,0	0,98	25,0	0,98	25,0	0,98	25,0	0,98
J	138,5	5,45	138,5	5,45	182,0	7,17	182,0	7,17	225,5	8,88	225,5	8,88	269,0	10,59	269,0	10,59	148,5	5,85	202,5	7,97	256,5	10,10	310,5	12,22
K	40,0	1,57	40,0	1,57	40,0	1,57	40,0	1,57	40,0	1,57	40,0	1,57	40,0	1,57	40,0	1,57	45,0	1,77	45,0	1,77	45,0	1,77	45,0	1,77
L	10,0	0,39	10,0	0,39	10,0	0,39	10,0	0,39	10,0	0,39	10,0	0,39	10,0	0,39	10,0	0,39	11,0	0,43	11,0	0,43	11,0	0,43	11,0	0,43
M	8,5	0,33	8,5	0,33	8,5	0,33	8,5	0,33	8,4	0,33	8,5	0,33	8,5	0,33	8,5	0,33	11,5	0,45	11,5	0,45	11,5	0,45	11,5	0,45
N	121,5	4,78	121,5	4,78	165,0	6,50	165,0	6,50	208,5	8,21	208,5	8,21	252,0	9,92	252,0	9,92	131,5	5,18	186,0	7,32	240,0	9,45	294,0	11,57
A1	60,5	2,38	60,5	2,38	104,0	4,09	104,0	4,09	147,5	5,81	147,5	5,81	191,0	7,52	191,0	7,52	70,5	2,78	124,5	4,90	178,5	7,03	232,5	9,15
B1	79,5	3,13	79,5	3,13	123,0	4,84	123,0	4,84	166,5	6,56	166,5	6,56	210,0	8,27	210,0	8,27	89,5	3,52	143,5	5,65	197,5	7,78	251,5	9,90
C1	96,5	3,80	96,5	3,80	140,0	5,51	140,0	5,51	183,5	7,22	183,5	7,22	227,0	8,94	227,0	8,94	106,5	4,19	214,5	8,44	268,5	10,57	322,5	12,70

M00153/OS200-250_S01-04_ A

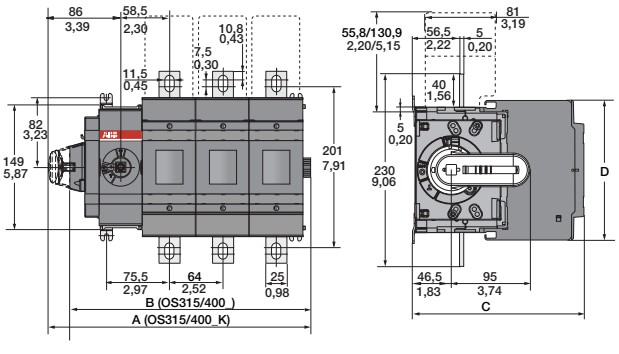

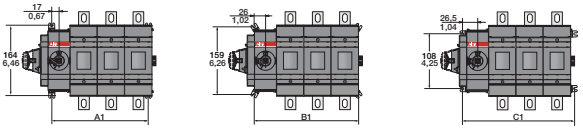

	OS315, OS315_K, OS400, OS400_K								OS400_, OS400_K							
	BS01/JS01		BS02/JS02		BS03/JS03		BS04/JS04		DS01		DS02		DS03		DS04	
	mm	in	mm	in	mm	in	mm	in	mm	in	mm	in	mm	in	mm	in
A	185,0	7,28	249,0	9,80	313,0	12,32	377,0	14,84	185,0	7,28	249,0	9,80	313,0	12,32	377,0	14,84
B	160,0	6,30	224,0	8,82	288,0	11,34	352,0	13,86	160,0	6,30	224,0	8,82	288,0	11,34	352,0	13,86
C	176,0	6,93	176,0	6,93	176,0	6,93	176,0	6,93	193,0	7,60	193,0	7,60	193,0	7,60	193,0	7,60
D	194,0	7,64	194,0	7,64	194,0	7,64	194,0	7,64	166,0	6,54	166,0	6,54	166,0	6,54	166,0	6,54
A1	98,5	3,88	162,5	6,40	226,5	8,92	290,5	11,44	98,5	3,88	162,5	6,40	226,5	8,92	290,5	11,44
B1	116,5	4,59	180,5	7,11	244,5	9,63	308,5	12,15	116,5	4,59	180,5	7,11	244,5	9,63	308,5	12,15
C1	134,5	5,30	198,5	7,81	262,5	10,33	326,5	12,85	134,5	5,30	198,5	7,81	262,5	10,33	326,5	12,85

M00154/OS315-400_S01-04_ A

Side operated and motorized switch fuses
Dimension drawings

OS 630_S_ and OS 800_S_

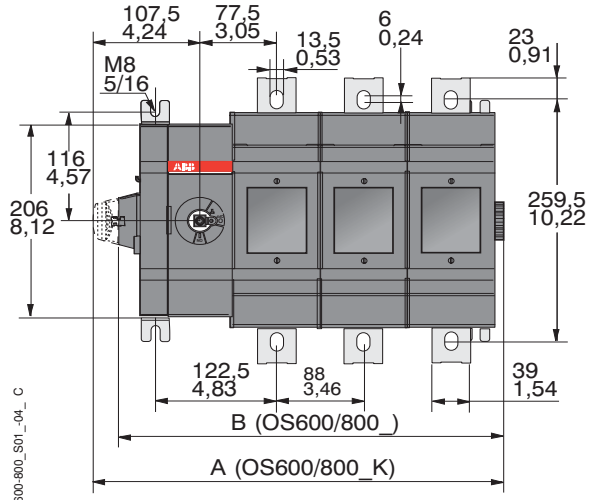

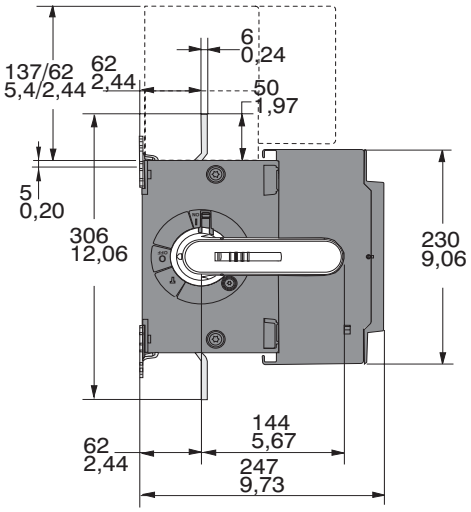

	OS600/630/800_ , OS600/630/800_K			
	DS/BS/JS/LS01	DS/BS/JS/LS02	DS/BS/JS/LS03	DS/BS/JS/LS04
	mm / in	mm / in	mm / in	mm / in
A	238/9,38	326/12,84	414/16,31	502/19,78
B	213/8,39	301/11,86	389/15,32	477/18,79
A1	147,5/5,81	235,5/9,28	323,5/12,75	411,5/16,21
B1	177,5/6,99	265,5/10,46	353,5/13,93	441,5/17,39
C1	203,5/8,02	291,5/11,48	379,5/14,95	467,5/18,42

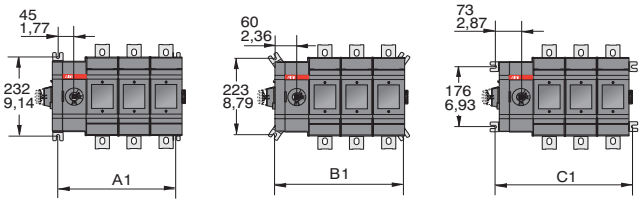

OSM32-63_M_

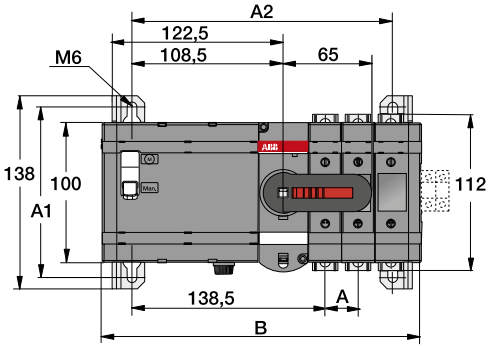

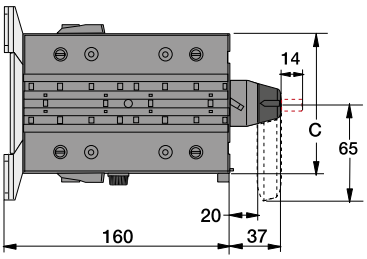

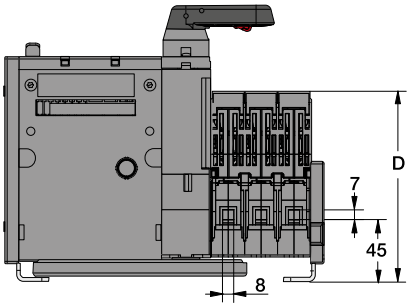

	OSM32-63_M_			
	D3	D4	B/F3	B/F4
A	23,5	23,5	23,5	23,5
A1	122	122	122	122
A2	187,5	211	187,5	211
B	229	252,5	229	252,5
C	100	100	100	100
D	136,5	136,5	124,5	124,5

M00293/OSM32-63-M_A

Motorized switch fuses
Dimension drawings

OSM100-160_M_

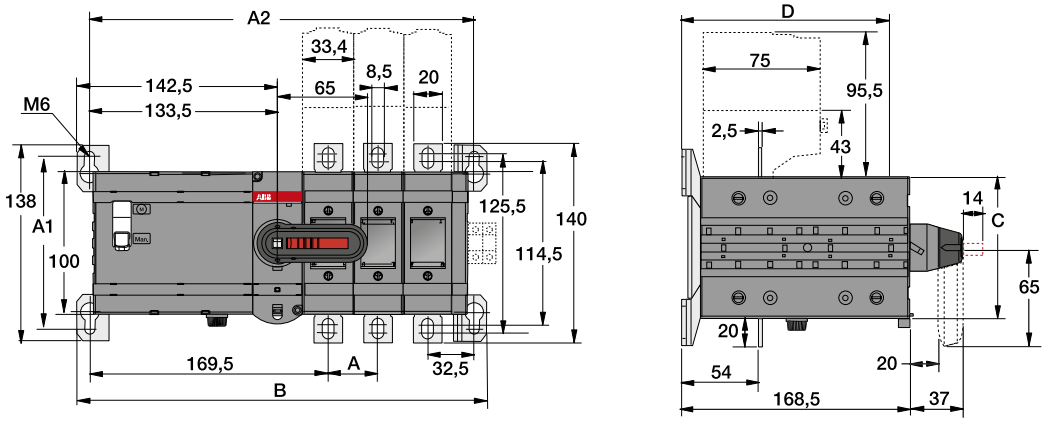

M00294/OSM100-160-M A

	OSM100-160_M_			
	D/F3	D/F4	B3	B4
A	35	35	35	35
A1	122	122	122	122
A2	272	307	272	307
B	290	325	290	325
C	100	100	118	118
D	146	146	130,5	130,5

OSM200_M_

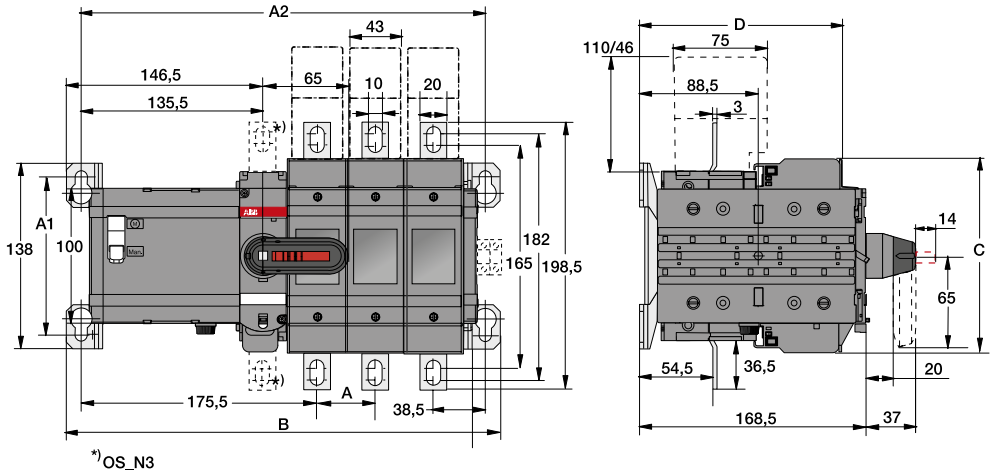

M00197/ OSM200-M B

	OSM200_M_			
	B3	B4	D3	D4
A	43,5	43,5	43,5	43,5
A1	118	118	118	118
A2	301,5	345	301,5	345
B	323,5	367	323,5	367
C	144,5	144,5	144,5	144,5
D	132	132	151	151

Motorized switch fuses
Dimension drawings

OSM250_M_

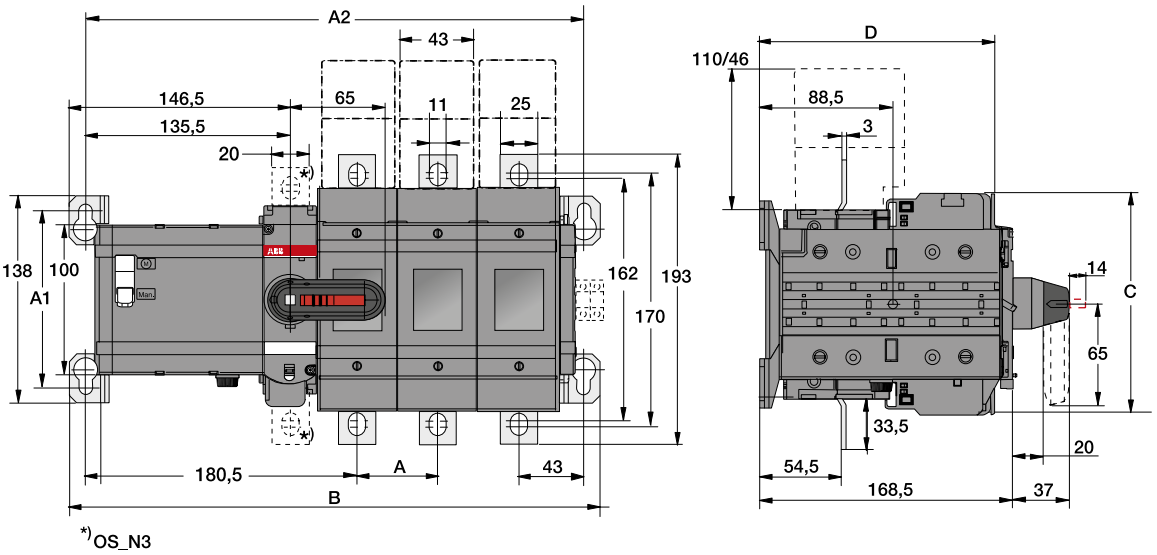

M00198/ OSM250-M B

	OSM250_M_	
	D3/B3	D4/B4
A	54	54
A1	118	118
A2	332	386
B	354	408
C	148,5	148,5
D	156	156

OSM315-400_M_

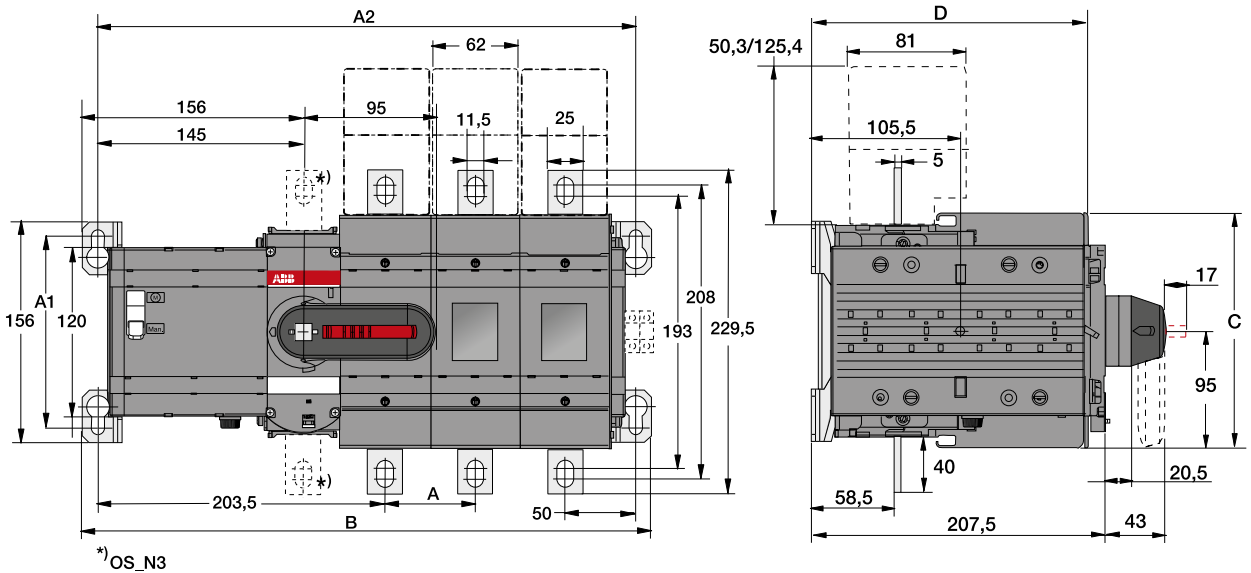

M00199/ OSM315-400-M C

	OSM315_M_		OSM400_M_			
	B3	B4	B3	B4	D3	D4
A	64	64	64	64	64	64
A1	136	136	136	136	136	136
A2	382	446	382	446	382	446
B	404	468	404	468	404	468
C	194	194	194	194	166	166
D	178,5	178,5	178,5	178,5	195,5	195,5

Motorized switch fuses
Dimension drawings

OSM630-800_M_

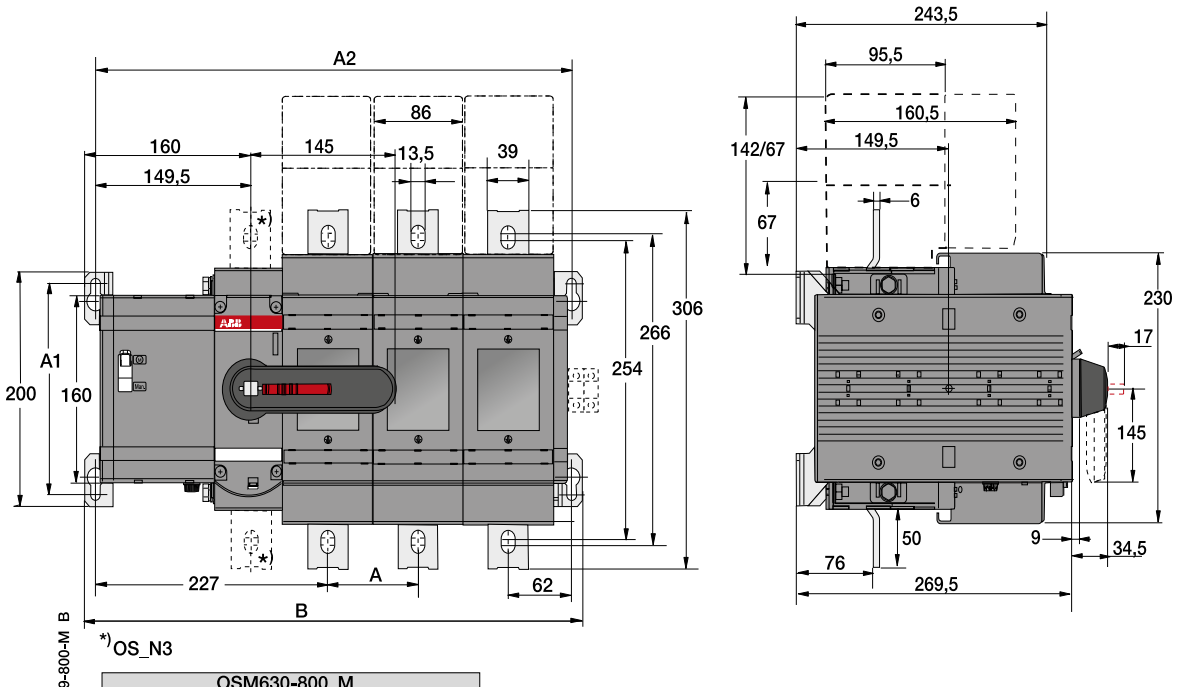

OSM630-800_M_		
	D3/B3	D4/B4
A	88	88
A1	180	180
A2	465,5	553,5
B	486,5	574,5

OSM1250_M_

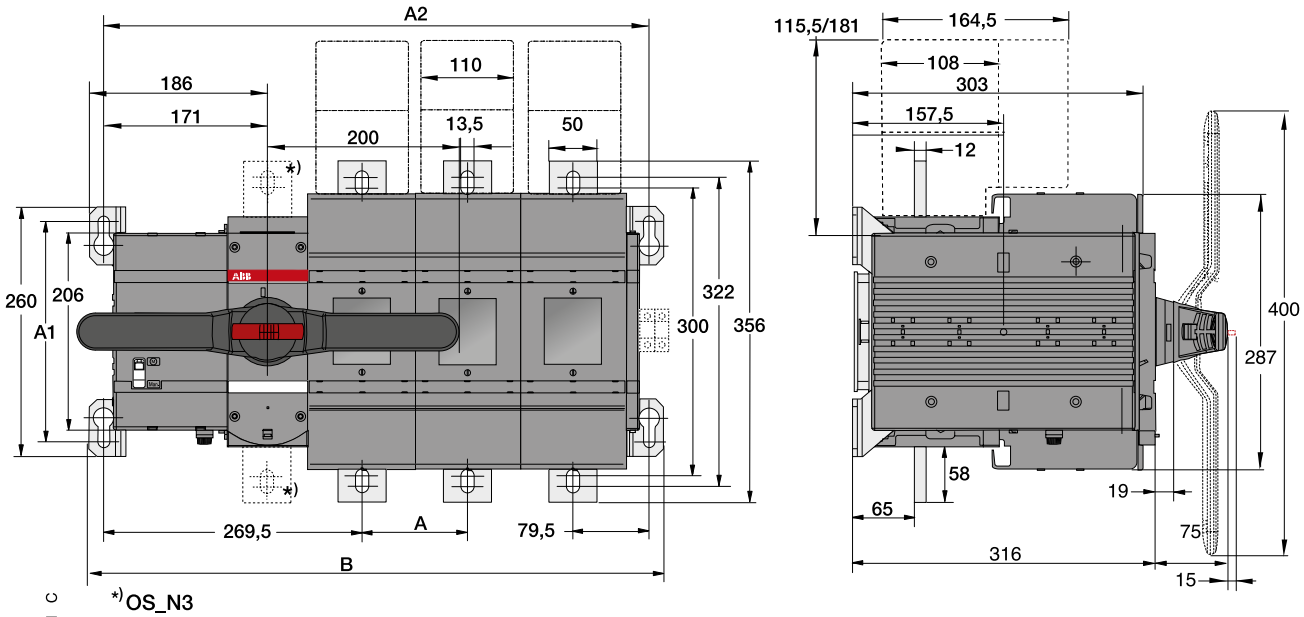

OSM1250_M_		
	B3/D3	B4/D4
A	110	110
A1	230	230
A2	569,5	679,5
B	599,5	709,5

Accessories
Dimension drawings

Plastic handles

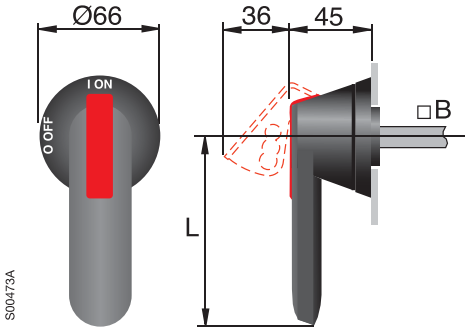

Type	L handle length [mm]	B shaft diameter
OH_45J6	45	6
OH_65J6	65	6
OH_95J12	95	12
OH_125J12	125	12
OH_145J12	145	12
OH_175J12	175	12
OH_275J12	275	12

Door drilling for OH_ handles:

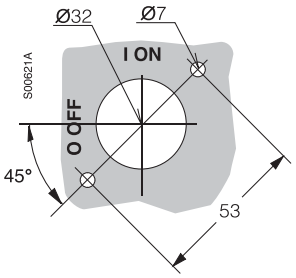

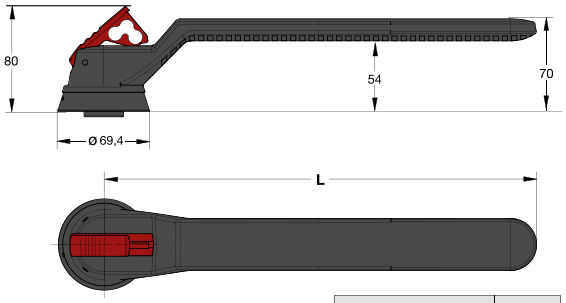

Type	L
OH_274J12	274
OH_330J12	330

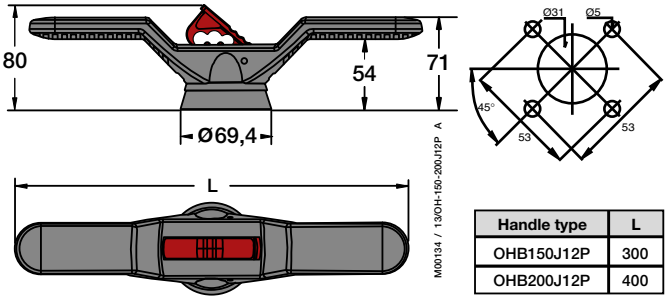

Handle type	L
OHB150J12P	300
OHB200J12P	400

Metallic handles

YASDA 7, 8, 21 (A=220)
YASDA 6, 35 (A=320)

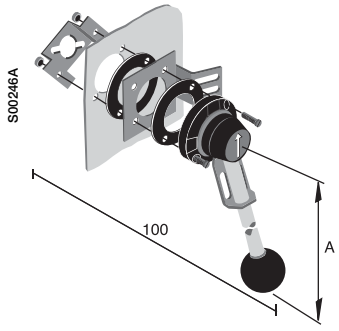

Door drilling for YASDA:

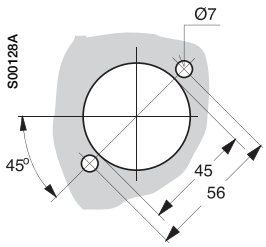

Stainless steel handles

OHM_

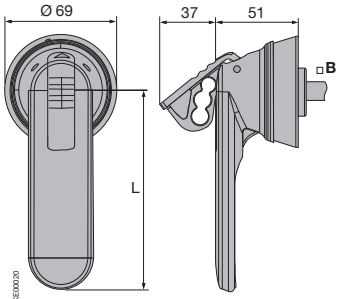

Handle type	OHM65L6	OHM125L12	OHM175L12	OHM275L12
L	65	125	175	275
□B	6	12	12	12

Door drilling for OHM_

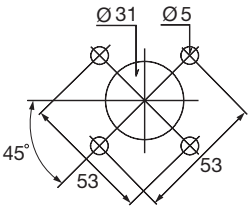

Minimum distance L between the hinge and the rotating shaft

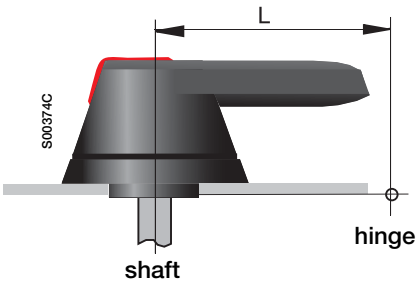

Sizes [A]	L [mm]	Suitable handles
30...250	60	OH_65J_
315...400	95	OH_95J_
630...800	150	OH_125J_, OH_145J_
630...800	175 275	OH_175J_ OH_275J_
630...800	220	YASDA7, 8
1200...1250	274 330	OH_274J_ OH_330J_

Accessories
Dimension drawings

6 and 8-pole switch fuses

OESAZW 2

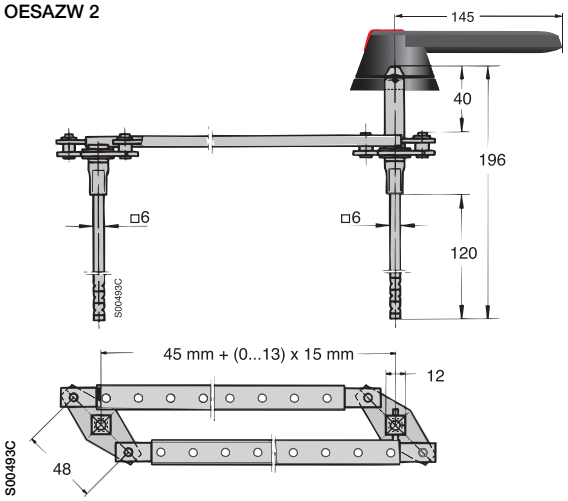

OETLZW 9

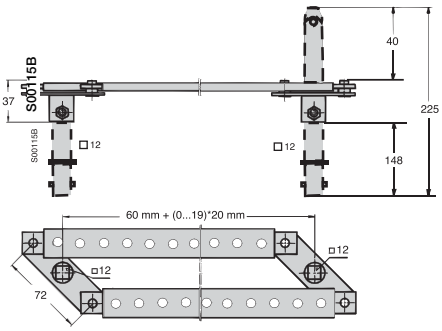

Change-over and by-pass switch fuses

OETLZW11

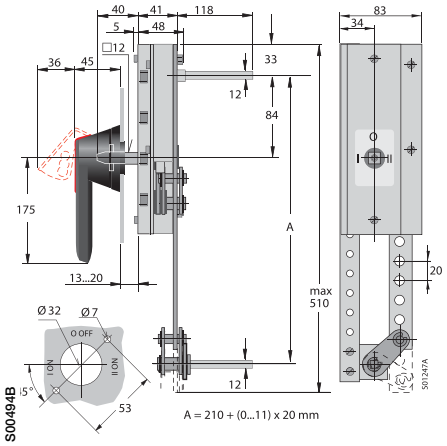

OETLZW12, 13

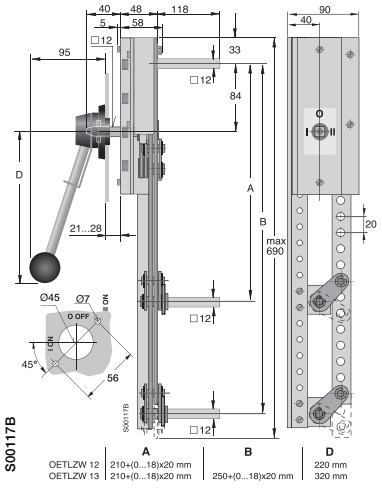

Mechanical interlock

OETLZW 3, 14, 15

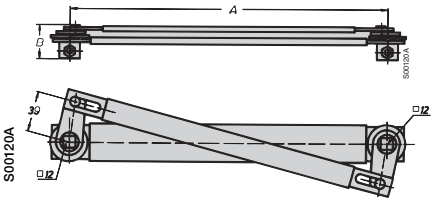

OETLZW 3: A= 300, B= 31
OETLZW 14: A= 250, B= 31
OETLZW 15: A0=500, B= 36

OTZW 25

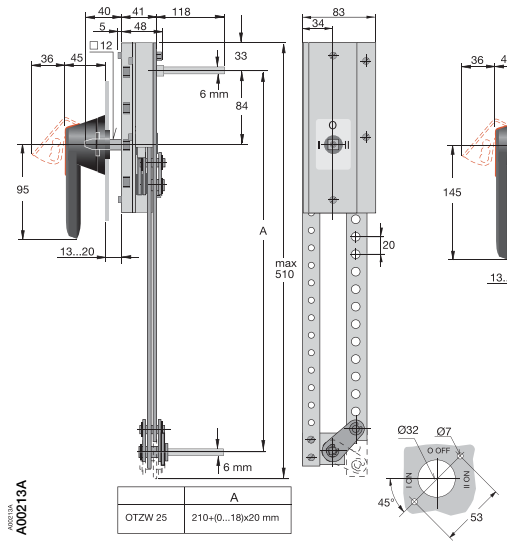

	A
OTZW 25	210+(0...18)x20 mm

OTZW 26

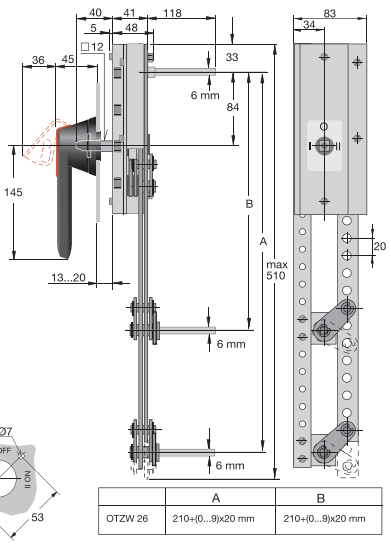

	A	B
OTZW 26	210+(0...9)x20 mm	210+(0...9)x20 mm

OTZW 10, OTZW 24

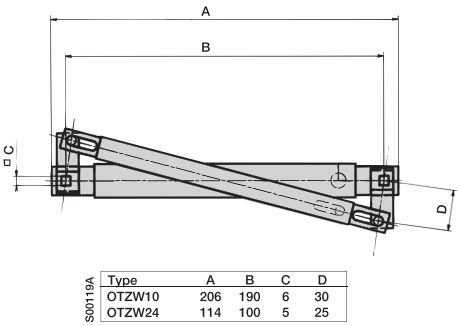

S00119A

Type	A	B	C	D
OTZW10	206	190	6	30
OTZW24	114	100	5	25

Switch fuses
Contact functions

Handle indications and functions

- The handle indicates the position of the contacts with complete reliability in all situations.
  If the contacts are welded together, the handle doesn´t reach the OFF-position but remains between ON and OFF, maintaining the door interlock and padlocking is not possible to do.
- When operating the switch fuse to the Test-position with a test handle the test auxiliary contacts change position.
  The main contacts remain open.

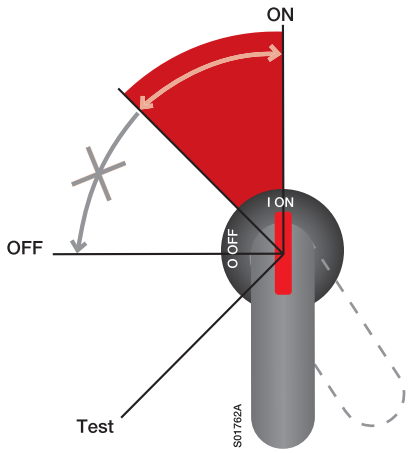

ON and OFF-functions of main and auxiliary contacts

Example

Places of auxiliary contacts and Test ind.

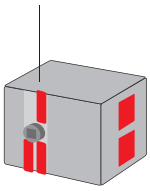

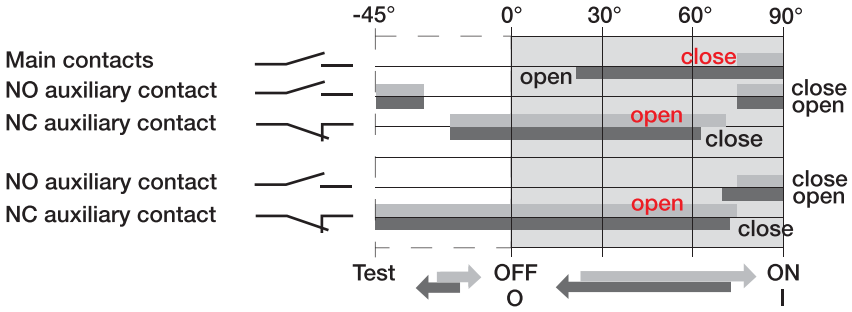

OS Mini

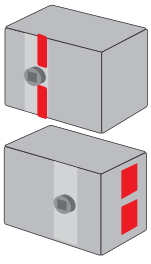

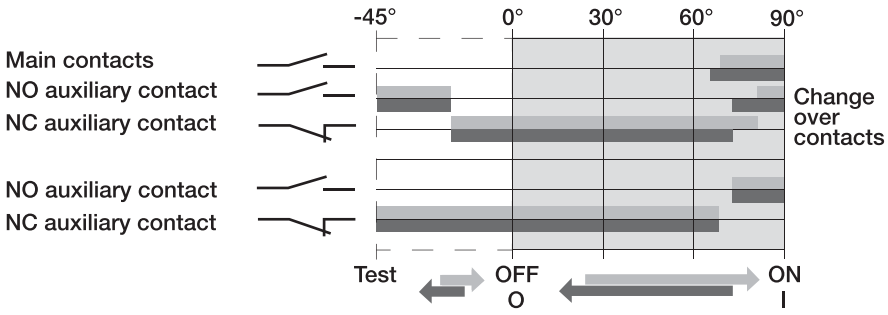

MCB-10
+ OESAZX 169 1 NO
MCB-01
+ OESAZX 169 1 NC

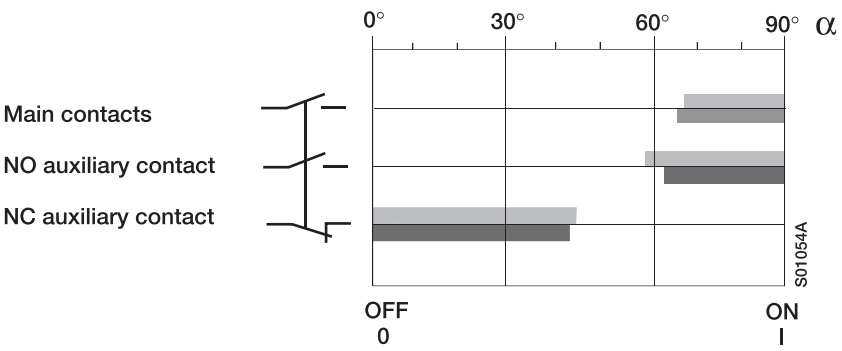

ON and OFF-functions of main and auxiliary contacts

OS32G...1250

Auxiliary contact	Contact configuration
OA1G10	1NO
OA3G01	1NC

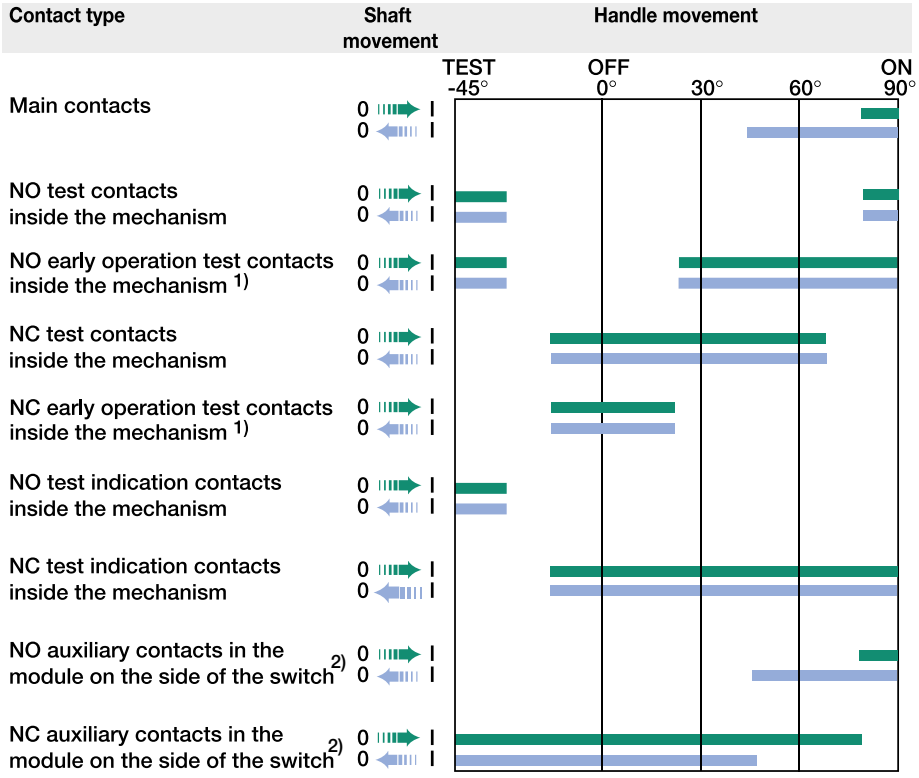

1) OSM1200...1250 only

2) Also OSM32G...1250

Index

Type	Order number	Page	Description
MCB-01	1SCA022150R5370	40	Auxiliary contact
MCB-10	1SCA022150R5110	40	Auxiliary contact
OA1G10	1SCA022353R4970	40	Auxiliary contact
OA1G10	1SCA022353R4970	41	Auxiliary contact
OA1G10AU	1SCA022436R7910	40	Auxiliary contact
OA1G10AU	1SCA022436R7910	41	Auxiliary contact
OA3G01	1SCA022456R7410	40	Auxiliary contact
OA3G01	1SCA022456R7410	41	Auxiliary contact
OA3G01AU	1SCA022819R5260	40	Auxiliary contact
OA3G01AU	1SCA022819R5260	41	Auxiliary contact
OA4B01	1SCA022276R9210	40	Auxiliary contact
OA4B10	1SCA022276R9050	40	Auxiliary contact
OA4B1C	1SCA022193R0150	40	Auxiliary contact
OEA28	1SCA022714R8810	41	Module for auxiliary contacts
OESAZG5	1SCA022057R1380	43	Solid link
OESAZG98	1SCA022354R9650	43	Solid link
OESAZK98	1SCA022067R7370	43	Solid link
OESAZL79	1SCA022067R7110	43	Solid link
OESAZS175	1SCA022354R9570	43	Solid link
OESAZS36	1SCA022044R4600	43	Solid link
OESAZW2	1SCA022078R1600	47	Conversion kit
OESAZX160	1SCA022186R3960	42	Neutral link
OESAZX162	1SCA022193R0400	42	Neutral link
OESAZX164	1SCA022202R9520	42	Neutral link
OESAZX165	1SCA022202R9790	42	Neutral link
OESAZX169	1SCA022196R9360	40	Mounting frame for auxiliary contacts
OESAZX171	1SCA022197R2580	42	Neutral link
OETLZK19	1SCA022093R1850	39	Adapter for extension socket
OETLZW11	1SCA022078R0030	47	Conversion kit
OETLZW12	1SCA022078R0200	47	Conversion kit
OETLZW13	1SCA022078R0460	47	Conversion kit
OETLZW14	1SCA022077R3410	47	Conversion kit
OETLZW15	1SCA022081R9340	47	Conversion kit
OETLZW16	1SCA022095R2070	50	Cam attachment
OETLZW3	1SCA022049R0380	47	Conversion kit
OETLZW5	1SCA022052R3900	50	Cam attachment
OETLZW9	1SCA022061R3300	47	Conversion kit
OETLZX95	1SCA022083R5620	39	Shaft extension socket
OEZNL1	1SCA022723R7400	43	Solid link
OEZNL10	1SCA116437R1001	43	Solid link
OEZNL8	1SCA113998R1001	43	Solid link
OFAE 504	1SCA022007R6880	37	Fuse replacement handle
OFAE 505	2CMA125276R1000	37	Fuse replacement handle
OFAW00	1SCA022003R9680	43	Solid link
OFAW1	1SCA022003R9760	43	Solid link
OFAW2	1SCA022003R9840	43	Solid link
OFAW3	1SCA022003R9920	43	Solid link
OFM260	1SCA022459R8560	49	Electronic fuse monitor
OFM690	1SCA022459R8480	49	Electronic fuse monitor
OFMZX2	1SCA022475R9910	49	Mounting accessory for fuse monitor
OFS260	1SCA022716R0180	49	Electronic fuse monitor
OFS690	1SCA022715R9920	49	Electronic fuse monitor
OHB125J12	1SCA022381R1560	36	Handle
OHB125J12T	1SCA022652R2220	36	Handle
OHB145J12	1SCA022381R2110	36	Handle
OHB145J12E00S	1SCA022679R9700	37	Handle
OHB145J12T	1SCA022652R2570	36	Handle
OHB150J12P	1SCA022865R9430	36	Handle
OHB175J12	1SCA022381R2450	36	Handle
OHB175J12T	1SCA022708R0740	36	Handle
OHB200J12P	1SCA022865R9510	36	Handle
OHB200J12PT	1SCA106510R1001	36	Handle
OHB274J12	1SCA115920R1001	36	Handle
OHB274J12T	1SCA120250R1001	36	Handle
OHB330J12	1SCA115922R1001	36	Handle
OHB330J12T	1SCA120252R1001	36	Handle
OHB4	1SCA022439R4050	37	Handle
OHB45J6	1SCA022380R8770	36	Handle
OHB45J6T	1SCA109870R1001	36	Handle
OHB65J6	1SCA022380R9660	36	Handle
OHB65J6E00S	1SCA022382R9850	37	Handle
OHB65J6T	1SCA022399R8110	36	Handle
OHB65J6TE00S	1SCA109016R1001	37	Handle
OHB80J6	1SCA022381R0240	36	Handle
OHB80J6T	1SCA022399R8290	36	Handle
OHB95J12	1SCA022381R0830	36	Handle
OHB95J12T	1SCA022736R1750	36	Handle
OHBS5	1SCA109015R1001	37	Handle
OHG125J12	1SCA022381R1640	36	Handle
OHG145J12	1SCA022381R2290	36	Handle
OHG175J12	1SCA022381R2610	36	Handle
OHG45J6	1SCA022380R8850	36	Handle
OHG65J6	1SCA022380R9740	36	Handle
OHG65J6E00S	1SCA022383R4510	37	Handle
OHG65J6T	1SCA022456R9620	36	Handle
OHG65J6TE00S	1SCA109014R1001	37	Handle
OHG95J12	1SCA022381R0910	36	Handle
OHM125L12	1SCA022739R1150	37	Handle
OHM175L12	1SCA022739R1230	37	Handle
OHM275L12	1SCA022832R4840	37	Handle
OHM65L6	1SCA022739R1070	36	Handle
OHY125J12	1SCA022381R1720	36	Handle
OHY125J12T	1SCA022652R2310	36	Handle
OHY145J12	1SCA022381R2370	36	Handle
OHY145J12T	1SCA022652R2650	36	Handle
OHY150J12P	1SCA101586R1001	36	Handle
OHY175J12	1SCA022381R2700	36	Handle
OHY200J12P	1SCA101587R1001	36	Handle
OHY200J12PT	1SCA111512R1001	36	Handle
OHY274J12	1SCA115919R1001	36	Handle
OHY300J12	1SCA115921R1001	36	Handle
OHY45J6	1SCA022380R8930	36	Handle
OHY65J6	1SCA022380R9820	36	Handle
OHY65J6E00S	1SCA022382R9930	37	Handle
OHY65J6T	1SCA022456R9540	36	Handle
OHY65J6TE00S	1SCA022688R0140	37	Handle
OHY95J12	1SCA022381R1050	36	Handle
OHY95J12T	1SCA022736R1910	36	Handle
OHZX14	1SCA022851R6590	37	Extension ring for pistol type handles
OS100GB02P	1SCA116723R1001	19	Front operated switch fuse
OS100GB03K	1SCA116747R1001	21	Front operated switch fuse
OS100GB03P	1SCA114613R1001	19	Front operated switch fuse
OS100GB04N1K	1SCA116748R1001	21	Front operated switch fuse
OS100GB04N1P	1SCA114614R1001	19	Front operated switch fuse
OS100GB11P	1SCA116851R1001	19	Front operated switch fuse
OS100GB12P	1SCA114586R1001	19	Front operated switch fuse
OS100GB22N1P	1SCA114602R1001	19	Front operated switch fuse
OS100GBS30	1SCA116758R1001	27	Side operated switch fuse
OS100GBS40N1	1SCA116759R1001	27	Side operated switch fuse
OS100GBS40N2	1SCA116760R1001	27	Side operated switch fuse

Type	Order number	Page	Description
OS100GJ03P	1SCA114639R1001	23	Front operated switch fuse
OS100GJ04FP	1SCA115439R1001	23	Front operated switch fuse
OS100GJ04N1P	1SCA115909R1001	23	Front operated switch fuse
OS100GJ12P	1SCA115666R1001	23	Front operated switch fuse
OS100GJ22FP	1SCA114636R1001	23	Front operated switch fuse
OS100GJ22N1P	1SCA115910R1001	23	Front operated switch fuse
OS100GJS30	1SCA115971R1001	30	Side operated switch fuse
OS100GJS30K	1SCA115942R1001	30	Side operated switch fuse
OS100GJS40F	1SCA115972R1001	30	Side operated switch fuse
OS100GJS40FK	1SCA115943R1001	30	Side operated switch fuse
OS100GJS40N1	1SCA116764R1001	30	Side operated switch fuse
OS100GJS40N2	1SCA116765R1001	30	Side operated switch fuse
OS1200L02P	1SCA116925R1001	24	Front operated switch fuse
OS1200L03P	1SCA105468R1001	24	Front operated switch fuse
OS1200L04FP	1SCA105466R1001	24	Front operated switch fuse
OS1250B02P	1SCA114070R1001	20	Front operated switch fuse
OS1250B03K	1SCA108715R1001	21	Front operated switch fuse
OS1250B03N3P	1SCA107936R1001	20	Front operated switch fuse
OS1250B03P	1SCA105250R1001	20	Front operated switch fuse
OS1250B04N2K	1SCA108717R1001	21	Front operated switch fuse
OS1250B04N2P	1SCA105469R1001	20	Front operated switch fuse
OS1250B12P	1SCA105470R1001	20	Front operated switch fuse
OS1250B22N2P	1SCA107937R1001	20	Front operated switch fuse
OS1250D02P	1SCA114051R1001	17	Front operated switch fuse
OS1250D03K	1SCA108718R1001	18	Front operated switch fuse
OS1250D03N3P	1SCA107932R1001	17	Front operated switch fuse
OS1250D03P	1SCA105475R1001	17	Front operated switch fuse
OS1250D04FP	1SCA105473R1001	17	Front operated switch fuse
OS1250D04N2K	1SCA108719R1001	18	Front operated switch fuse
OS1250D04N2P	1SCA105248R1001	17	Front operated switch fuse
OS1250D12P	1SCA105246R1001	17	Front operated switch fuse
OS1250D22N2P	1SCA107933R1001	17	Front operated switch fuse
OS1250DA02P	1SCA114059R1001	17	Front operated switch fuse
OS1250DA03K	1SCA108720R1001	18	Front operated switch fuse
OS1250DA03N3P	1SCA107934R1001	17	Front operated switch fuse
OS1250DA03P	1SCA105238R1001	17	Front operated switch fuse
OS1250DA04FP	1SCA105240R1001	17	Front operated switch fuse
OS1250DA04N2K	1SCA108721R1001	18	Front operated switch fuse
OS1250DA04N2P	1SCA105243R1001	17	Front operated switch fuse
OS1250DA12P	1SCA105241R1001	17	Front operated switch fuse
OS1250DA22N2P	1SCA107935R1001	17	Front operated switch fuse
OS125GB02P	1SCA116724R1001	19	Front operated switch fuse
OS125GB03K	1SCA116751R1001	21	Front operated switch fuse
OS125GB03P	1SCA115634R1001	19	Front operated switch fuse
OS125GB04N1K	1SCA116752R1001	21	Front operated switch fuse
OS125GB04N1P	1SCA115901R1001	19	Front operated switch fuse
OS125GB11P	1SCA116853R1001	19	Front operated switch fuse
OS125GB12P	1SCA114603R1001	19	Front operated switch fuse
OS125GB22N1P	1SCA115903R1001	19	Front operated switch fuse
OS125GBS30	1SCA116048R1001	27	Side operated switch fuse
OS125GBS30K	1SCA116400R1001	27	Side operated switch fuse
OS125GBS40N1	1SCA115959R1001	27	Side operated switch fuse
OS125GBS40N1K	1SCA115926R1001	27	Side operated switch fuse
OS125GBS40N2	1SCA116761R1001	27	Side operated switch fuse
OS125GD02P	1SCA116716R1001	16	Front operated switch fuse
OS125GD03K	1SCA116878R1001	18	Front operated switch fuse
OS125GD03P	1SCA115639R1001	16	Front operated switch fuse
OS125GD04FK	1SCA116741R1001	18	Front operated switch fuse
OS125GD04FP	1SCA115686R1001	16	Front operated switch fuse
OS125GD04N2K	1SCA116740R1001	18	Front operated switch fuse
OS125GD04N2P	1SCA115877R1001	16	Front operated switch fuse
OS125GD11P	1SCA116712R1001	16	Front operated switch fuse
OS125GD12P	1SCA115641R1001	16	Front operated switch fuse
OS125GD22FP	1SCA116732R1001	16	Front operated switch fuse
OS125GD22N2P	1SCA115880R1001	16	Front operated switch fuse
OS125GDS30	1SCA115966R1001	25	Side operated switch fuse
OS125GDS30K	1SCA115933R1001	25	Side operated switch fuse
OS125GDS40F	1SCA116756R1001	25	Side operated switch fuse
OS125GDS40N2	1SCA115967R1001	25	Side operated switch fuse
OS125GDS40N2K	1SCA115934R1001	25	Side operated switch fuse
OS125GF02P	1SCA116727R1001	22	Front operated switch fuse
OS125GF03P	1SCA115602R1001	22	Front operated switch fuse
OS125GF04FP	1SCA115606R1001	22	Front operated switch fuse
OS125GF04N1P	1SCA115888R1001	22	Front operated switch fuse
OS125GF11P	1SCA116726R1001	22	Front operated switch fuse
OS125GF12P	1SCA114624R1001	22	Front operated switch fuse
OS125GF22FP	1SCA115614R1001	22	Front operated switch fuse
OS125GF22N1P	1SCA115893R1001	22	Front operated switch fuse
OS125GFS30	1SCA115973R1001	29	Side operated switch fuse
OS125GFS30K	1SCA115944R1001	29	Side operated switch fuse
OS125GFS40F	1SCA115975R1001	29	Side operated switch fuse
OS125GFS40FK	1SCA115946R1001	29	Side operated switch fuse
OS125GFS40N1	1SCA115974R1001	29	Side operated switch fuse
OS125GFS40N1K	1SCA115945R1001	29	Side operated switch fuse
OS160GB02P	1SCA116725R1001	19	Front operated switch fuse
OS160GB03K	1SCA116753R1001	21	Front operated switch fuse
OS160GB03P	1SCA115413R1001	19	Front operated switch fuse
OS160GB04N1K	1SCA116754R1001	21	Front operated switch fuse
OS160GB04N1P	1SCA115896R1001	19	Front operated switch fuse
OS160GB11P	1SCA117430R1001	19	Front operated switch fuse
OS160GB12P	1SCA115637R1001	19	Front operated switch fuse
OS160GB22N1P	1SCA115899R1001	19	Front operated switch fuse
OS160GBS30	1SCA115960R1001	27	Side operated switch fuse
OS160GBS30K	1SCA115927R1001	27	Side operated switch fuse
OS160GBS40N1	1SCA115961R1001	27	Side operated switch fuse
OS160GBS40N1K	1SCA115928R1001	27	Side operated switch fuse
OS160GBS40N2	1SCA116762R1001	27	Side operated switch fuse
OS160GD02P	1SCA116717R1001	16	Front operated switch fuse
OS160GD03K	1SCA116742R1001	18	Front operated switch fuse
OS160GD03P	1SCA115399R1001	16	Front operated switch fuse
OS160GD04FK	1SCA116880R1001	18	Front operated switch fuse
OS160GD04FP	1SCA115402R1001	16	Front operated switch fuse
OS160GD04N2K	1SCA116743R1001	18	Front operated switch fuse
OS160GD04N2P	1SCA115882R1001	16	Front operated switch fuse
OS160GD11P	1SCA116713R1001	16	Front operated switch fuse
OS160GD12P	1SCA115643R1001	16	Front operated switch fuse
OS160GD22FP	1SCA116855R1001	16	Front operated switch fuse
OS160GD22N2P	1SCA115884R1001	16	Front operated switch fuse
OS160GDS30	1SCA115968R1001	25	Side operated switch fuse
OS160GDS30K	1SCA115935R1001	25	Side operated switch fuse
OS160GDS40F	1SCA116757R1001	25	Side operated switch fuse
OS160GDS40N2	1SCA115969R1001	25	Side operated switch fuse
OS160GDS40N2K	1SCA115939R1001	25	Side operated switch fuse
OS16FD1201	1SCA108788R1001	23	Front operated switch fuse
OS16FD2201F	1SCA108993R1001	23	Front operated switch fuse
OS16FD2201N1	1SCA108789R1001	23	Front operated switch fuse
OS16FDS3001	1SCA108994R1001	30	Side operated switch fuse
OS16FDS4001F	1SCA108996R1001	30	Side operated switch fuse
OS16FDS4001N1	1SCA108995R1001	30	Side operated switch fuse
OS200B02P	1SCA022769R7820	20	Front operated switch fuse
OS200B03K	1SCA022763R6950	21	Front operated switch fuse
OS200B03N3P	1SCA022750R0620	20	Front operated switch fuse
OS200B03P	1SCA022709R9330	20	Front operated switch fuse
OS200B04N2K	1SCA022763R7090	21	Front operated switch fuse
OS200B04N2P	1SCA022709R9410	20	Front operated switch fuse
OS200B12P	1SCA022721R3210	20	Front operated switch fuse
OS200B22N2P	1SCA022721R3300	20	Front operated switch fuse
OS200BS03	1SCA022860R3810	28	Side operated switch fuse
OS200BS03K	1SCA022860R3990	28	Side operated switch fuse
OS200BS04N2	1SCA022870R7510	28	Side operated switch fuse
OS200BS04N2K	1SCA022870R7690	28	Side operated switch fuse
OS200BS30	1SCA022870R7770	28	Side operated switch fuse
OS200BS30K	1SCA022870R7850	28	Side operated switch fuse
OS200BS40N2	1SCA022870R8150	28	Side operated switch fuse
OS200BS40N2K	1SCA022870R8230	28	Side operated switch fuse
OS200D02P	1SCA022759R9220	17	Front operated switch fuse
OS200D03K	1SCA022764R7130	18	Front operated switch fuse
OS200D03N3P	1SCA022749R8710	17	Front operated switch fuse
OS200D03P	1SCA022709R9500	17	Front operated switch fuse
OS200D04FP	1SCA022725R4750	17	Front operated switch fuse
OS200D04N2K	1SCA022768R7430	18	Front operated switch fuse
OS200D04N2P	1SCA022709R9680	17	Front operated switch fuse
OS200D11P	1SCA022759R9650	17	Front operated switch fuse
OS200D12P	1SCA022721R3050	17	Front operated switch fuse

Type	Order number	Page	Description
OS200D22N2P	1SCA022721R3130	17	Front operated switch fuse
OS200DS03	1SCA022871R0720	26	Side operated switch fuse
OS200DS03K	1SCA022871R0810	26	Side operated switch fuse
OS200DS04F	1SCA022871R0990	26	Side operated switch fuse
OS200DS04FK	1SCA022871R1020	26	Side operated switch fuse
OS200DS30	1SCA022871R1370	26	Side operated switch fuse
OS200DS30K	1SCA022871R1450	26	Side operated switch fuse
OS200DS40F	1SCA022871R1530	26	Side operated switch fuse
OS200DS40FK	1SCA022871R1610	26	Side operated switch fuse
OS200DZ03P	1SCA022797R3440	17	Front operated switch fuse
OS200DZ04N2P	1SCA022820R9230	17	Front operated switch fuse
OS200DZ12P	1SCA022820R9150	17	Front operated switch fuse
OS200J02P	1SCA107598R1001	24	Front operated switch fuse
OS200J03P	1SCA022709R9760	24	Front operated switch fuse
OS200J04FP	1SCA022758R9770	24	Front operated switch fuse
OS20FB12A1	1SCA108790R1001	19	Front operated switch fuse
OS20FB22A1N1	1SCA108796R1001	19	Front operated switch fuse
OS20FBS30A1	1SCA108997R1001	27	Side operated switch fuse
OS20FBS40A1N1	1SCA108998R1001	27	Side operated switch fuse
OS250B02P	1SCA022769R9440	20	Front operated switch fuse
OS250B03K	1SCA022763R6010	21	Front operated switch fuse
OS250B03N3P	1SCA022750R8010	20	Front operated switch fuse
OS250B03P	1SCA022750R6660	20	Front operated switch fuse
OS250B04N2K	1SCA022763R6280	21	Front operated switch fuse
OS250B04N2P	1SCA022750R7800	20	Front operated switch fuse
OS250B12P	1SCA022778R9860	20	Front operated switch fuse
OS250B22N2P	1SCA022778R9940	20	Front operated switch fuse
OS250BS03	1SCA022860R4370	28	Side operated switch fuse
OS250BS03K	1SCA022860R4450	28	Side operated switch fuse
OS250BS04N2	1SCA022870R8310	28	Side operated switch fuse
OS250BS04N2K	1SCA022870R8400	28	Side operated switch fuse
OS250BS30	1SCA022870R8580	28	Side operated switch fuse
OS250BS30K	1SCA022870R8660	28	Side operated switch fuse
OS250BS40N2	1SCA022870R8910	28	Side operated switch fuse
OS250BS40N2K	1SCA022870R9040	28	Side operated switch fuse
OS250D02P	1SCA022760R0170	17	Front operated switch fuse
OS250D03K	1SCA022763R6360	18	Front operated switch fuse
OS250D03N3P	1SCA022749R9430	17	Front operated switch fuse
OS250D03P	1SCA022719R0090	17	Front operated switch fuse
OS250D04FP	1SCA022726R8620	17	Front operated switch fuse
OS250D04N2K	1SCA022763R6440	18	Front operated switch fuse
OS250D04N2P	1SCA022719R2380	17	Front operated switch fuse
OS250D11P	1SCA022752R8710	17	Front operated switch fuse
OS250D12P	1SCA022726R8380	17	Front operated switch fuse
OS250D22N2P	1SCA022726R8460	17	Front operated switch fuse
OS250DS03	1SCA022860R3050	26	Side operated switch fuse
OS250DS03K	1SCA022860R3130	26	Side operated switch fuse
OS250DS04F	1SCA022860R3210	26	Side operated switch fuse
OS250DS04FK	1SCA022860R3300	26	Side operated switch fuse
OS250DS30	1SCA022871R2180	26	Side operated switch fuse
OS250DS30K	1SCA022871R2260	26	Side operated switch fuse
OS250DS40F	1SCA022871R2340	26	Side operated switch fuse
OS250DS40FK	1SCA022871R2420	26	Side operated switch fuse
OS25FF1210	1SCA108636R1001	22	Front operated switch fuse
OS25FF2210F	1SCA108637R1001	22	Front operated switch fuse
OS25FF2210N1	1SCA108638R1001	22	Front operated switch fuse
OS25FFS3010	1SCA108639R1001	29	Side operated switch fuse
OS25FFS4010F	1SCA108640R1001	29	Side operated switch fuse
OS25FFS4010N1	1SCA108661R1001	29	Side operated switch fuse
OS30FACC12P	1SCA108817R1001	23	Front operated switch fuse
OS30FACC22FP	1SCA108821R1001	23	Front operated switch fuse
OS30FACCS30P	1SCA108999R1001	30	Side operated switch fuse
OS30FAJ12P	1SCA108828R1001	23	Front operated switch fuse
OS30FAJ22FP	1SCA108831R1001	23	Front operated switch fuse
OS30FAJS30P	1SCA108838R1001	30	Side operated switch fuse
OS315B02P	1SCA022817R3450	20	Front operated switch fuse
OS315B03K	1SCA022763R6520	21	Front operated switch fuse
OS315B03N3P	1SCA022753R8940	20	Front operated switch fuse
OS315B03P	1SCA022719R0680	20	Front operated switch fuse
OS315B04N2K	1SCA022763R6610	21	Front operated switch fuse
OS315B04N2P	1SCA022719R2710	20	Front operated switch fuse
OS315B12P	1SCA022753R2310	20	Front operated switch fuse

Type	Order number	Page	Description
OS315B22N2P	1SCA022753R3390	20	Front operated switch fuse
OS315BS03	1SCA022860R4700	28	Side operated switch fuse
OS315BS03K	1SCA022860R4880	28	Side operated switch fuse
OS315BS04N2	1SCA022870R9120	28	Side operated switch fuse
OS315BS04N2K	1SCA022870R9210	28	Side operated switch fuse
OS315BS30	1SCA022870R9390	28	Side operated switch fuse
OS315BS30K	1SCA022870R9470	28	Side operated switch fuse
OS315BS40N2	1SCA022870R9710	28	Side operated switch fuse
OS315BS40N2K	1SCA022870R9800	28	Side operated switch fuse
OS32FB12A1	1SCA108840R1001	19	Front operated switch fuse
OS32FB12A2	1SCA108847R1001	19	Front operated switch fuse
OS32FB12F1	1SCA108851R1001	19	Front operated switch fuse
OS32FB22A1N1	1SCA108853R1001	19	Front operated switch fuse
OS32FB22A2N1	1SCA108863R1001	19	Front operated switch fuse
OS32FB22F1N1	1SCA109003R1001	19	Front operated switch fuse
OS32FBS30A1	1SCA108877R1001	27	Side operated switch fuse
OS32FBS30A2	1SCA108882R1001	27	Side operated switch fuse
OS32FBS30F1	1SCA109004R1001	27	Side operated switch fuse
OS32FBS40A1N1	1SCA109006R1001	27	Side operated switch fuse
OS32FBS40A2N1	1SCA109007R1001	27	Side operated switch fuse
OS32FBS40F1N1	1SCA109005R1001	27	Side operated switch fuse
OS32FF1214	1SCA108642R1001	22	Front operated switch fuse
OS32FF2214F	1SCA108643R1001	22	Front operated switch fuse
OS32FF2214N1	1SCA108645R1001	22	Front operated switch fuse
OS32FFS3014	1SCA108646R1001	29	Side operated switch fuse
OS32FFS4014F	1SCA108647R1001	29	Side operated switch fuse
OS32FFS4014N1	1SCA108649R1001	29	Side operated switch fuse
OS32GB02P	1SCA116721R1001	19	Front operated switch fuse
OS32GB03K	1SCA116744R1001	21	Front operated switch fuse
OS32GB03P	1SCA115259R1001	19	Front operated switch fuse
OS32GB04N1K	1SCA116856R1001	21	Front operated switch fuse
OS32GB04N1P	1SCA114610R1001	19	Front operated switch fuse
OS32GB11P	1SCA116718R1001	19	Front operated switch fuse
OS32GB12P	1SCA115331R1001	19	Front operated switch fuse
OS32GB22N1P	1SCA115345R1001	19	Front operated switch fuse
OS32GBS30	1SCA115955R1001	27	Side operated switch fuse
OS32GBS30K	1SCA115918R1001	27	Side operated switch fuse
OS32GBS40N1	1SCA115956R1001	27	Side operated switch fuse
OS32GBS40N1K	1SCA115923R1001	27	Side operated switch fuse
OS32GD02P	1SCA116714R1001	16	Front operated switch fuse
OS32GD03K	1SCA116733R1001	18	Front operated switch fuse
OS32GD03P	1SCA115189R1001	16	Front operated switch fuse
OS32GD04FK	1SCA116737R1001	18	Front operated switch fuse
OS32GD04FP	1SCA115196R1001	16	Front operated switch fuse
OS32GD04N2K	1SCA116734R1001	18	Front operated switch fuse
OS32GD04N2P	1SCA115193R1001	16	Front operated switch fuse
OS32GD11P	1SCA116703R1001	16	Front operated switch fuse
OS32GD12P	1SCA114581R1001	16	Front operated switch fuse
OS32GD22FP	1SCA115205R1001	16	Front operated switch fuse
OS32GD22N2P	1SCA115202R1001	16	Front operated switch fuse
OS32GDS30	1SCA115963R1001	25	Side operated switch fuse
OS32GDS30K	1SCA115929R1001	25	Side operated switch fuse
OS32GDS40F	1SCA116755R1001	25	Side operated switch fuse
OS32GDS40N1K	1SCA115930R1001	25	Side operated switch fuse
OS32GDS40N2	1SCA116046R1001	25	Side operated switch fuse
OS32GDS40N2K	1SCA116402R1001	25	Side operated switch fuse
OS35FD1202	1SCA108908R1001	23	Front operated switch fuse
OS35FD2202F	1SCA109008R1001	23	Front operated switch fuse
OS35FD2202N1	1SCA108911R1001	23	Front operated switch fuse
OS35FDS3002	1SCA109009R1001	30	Side operated switch fuse
OS35FDS4002F	1SCA109011R1001	30	Side operated switch fuse
OS35FDS4002N1	1SCA109010R1001	30	Side operated switch fuse
OS400B02P	1SCA022813R7220	20	Front operated switch fuse
OS400B03K	1SCA022763R6790	21	Front operated switch fuse
OS400B03N3P	1SCA022753R9160	20	Front operated switch fuse
OS400B03P	1SCA022719R0840	20	Front operated switch fuse
OS400B04N2K	1SCA022763R6870	21	Front operated switch fuse
OS400B04N2P	1SCA022719R2890	20	Front operated switch fuse
OS400B12P	1SCA022753R3470	20	Front operated switch fuse
OS400B22N2P	1SCA022753R7200	20	Front operated switch fuse
OS400BS03	1SCA022860R5180	28	Side operated switch fuse
OS400BS03K	1SCA022860R5260	28	Side operated switch fuse

Type	Order number	Page	Description
OS400BS04N2	1SCA022870R9980	28	Side operated switch fuse
OS400BS04N2K	1SCA022871R0050	28	Side operated switch fuse
OS400BS30	1SCA022871R0130	28	Side operated switch fuse
OS400BS30K	1SCA022871R0210	28	Side operated switch fuse
OS400BS40N2	1SCA022871R0560	28	Side operated switch fuse
OS400BS40N2K	1SCA022871R0640	28	Side operated switch fuse
OS400D02P	1SCA022811R2740	17	Front operated switch fuse
OS400D03K	1SCA022779R5410	18	Front operated switch fuse
OS400D03N3P	1SCA022753R9320	17	Front operated switch fuse
OS400D03P	1SCA022719R0250	17	Front operated switch fuse
OS400D04FP	1SCA022753R7110	17	Front operated switch fuse
OS400D04N2K	1SCA022763R7250	18	Front operated switch fuse
OS400D04N2P	1SCA022719R2460	17	Front operated switch fuse
OS400D11P	1SCA110207R1001	17	Front operated switch fuse
OS400D12P	1SCA022753R3800	17	Front operated switch fuse
OS400D22N2P	1SCA022753R1770	17	Front operated switch fuse
OS400DS03	1SCA022860R3480	26	Side operated switch fuse
OS400DS03K	1SCA022860R3560	26	Side operated switch fuse
OS400DS04F	1SCA022860R3640	26	Side operated switch fuse
OS400DS04FK	1SCA022860R3720	26	Side operated switch fuse
OS400DS30	1SCA022871R2850	26	Side operated switch fuse
OS400DS30K	1SCA022871R2930	26	Side operated switch fuse
OS400DS40F	1SCA022871R3070	26	Side operated switch fuse
OS400DS40FK	1SCA022871R3150	26	Side operated switch fuse
OS400J02P	1SCA107596R1001	24	Front operated switch fuse
OS400J03P	1SCA022719R1140	24	Front operated switch fuse
OS400J04FP	1SCA022755R3740	24	Front operated switch fuse
OS40FD12000	1SCA108914R1001	16	Front operated switch fuse
OS40FD22000N1	1SCA108938R1001	16	Front operated switch fuse
OS40FDS30000	1SCA108942R1001	25	Side operated switch fuse
OS40FDS30000-N	1SCA109012R1001	25	Side operated switch fuse
OS40FDS40000N1	1SCA108954R1001	25	Side operated switch fuse
OS50GF02P	1SCA118345R1001	22	Front operated switch fuse
OS50GF03P	1SCA115492R1001	22	Front operated switch fuse
OS50GF04FP	1SCA115498R1001	22	Front operated switch fuse
OS50GF04N1P	1SCA115495R1001	22	Front operated switch fuse
OS50GF11P	1SCA116870R1001	22	Front operated switch fuse
OS50GF12P	1SCA115553R1001	22	Front operated switch fuse
OS50GF22FP	1SCA114623R1001	22	Front operated switch fuse
OS50GF22N1P	1SCA114622R1001	22	Front operated switch fuse
OS50GFS30	1SCA116050R1001	29	Side operated switch fuse
OS50GFS30K	1SCA116404R1001	29	Side operated switch fuse
OS50GFS40F	1SCA116014R1001	29	Side operated switch fuse
OS50GFS40FK	1SCA116425R1001	29	Side operated switch fuse
OS50GFS40N1	1SCA116058R1001	29	Side operated switch fuse
OS50GFS40N1K	1SCA116013R1001	29	Side operated switch fuse
OS600J02P	1SCA107595R1001	24	Front operated switch fuse
OS600J03P	1SCA022825R8870	24	Front operated switch fuse
OS600J04FP	1SCA022839R4030	24	Front operated switch fuse
OS60GJ03P	1SCA115443R1001	23	Front operated switch fuse
OS60GJ04FP	1SCA115446R1001	23	Front operated switch fuse
OS60GJ04N1P	1SCA116736R1001	23	Front operated switch fuse
OS60GJ12P	1SCA115449R1001	23	Front operated switch fuse
OS60GJ22FP	1SCA115469R1001	23	Front operated switch fuse
OS60GJ22N1P	1SCA116735R1001	23	Front operated switch fuse
OS60GJS30	1SCA116051R1001	30	Side operated switch fuse
OS60GJS30K	1SCA116426R1001	30	Side operated switch fuse
OS60GJS40F	1SCA115970R1001	30	Side operated switch fuse
OS60GJS40FK	1SCA115941R1001	30	Side operated switch fuse
OS60GJS40N1	1SCA116763R1001	30	Side operated switch fuse
OS630B02P	1SCA113529R1001	20	Front operated switch fuse
OS630B03K	1SCA108708R1001	21	Front operated switch fuse
OS630B03N3P	1SCA100860R1001	20	Front operated switch fuse
OS630B03P	1SCA022825R5850	20	Front operated switch fuse
OS630B04N2K	1SCA108710R1001	21	Front operated switch fuse
OS630B04N2P	1SCA022825R6230	20	Front operated switch fuse
OS630B12P	1SCA022825R6400	20	Front operated switch fuse
OS630B22N2P	1SCA022825R6660	20	Front operated switch fuse
OS630BS03	1SCA108141R1001	28	Side operated switch fuse
OS630BS03K	1SCA108142R1001	28	Side operated switch fuse
OS630BS04N2	1SCA108145R1001	28	Side operated switch fuse
OS630BS04N2K	1SCA108146R1001	28	Side operated switch fuse

Type	Order number	Page	Description
OS630BS30	1SCA108147R1001	28	Side operated switch fuse
OS630BS30K	1SCA108148R1001	28	Side operated switch fuse
OS630BS40N2	1SCA108152R1001	28	Side operated switch fuse
OS630BS40N2K	1SCA108151R1001	28	Side operated switch fuse
OS630D02P	1SCA107745R1001	17	Front operated switch fuse
OS630D03K	1SCA108704R1001	18	Front operated switch fuse
OS630D03N3P	1SCA100858R1001	17	Front operated switch fuse
OS630D03P	1SCA022825R2830	17	Front operated switch fuse
OS630D04FP	1SCA022825R4610	17	Front operated switch fuse
OS630D04N2K	1SCA108705R1001	18	Front operated switch fuse
OS630D04N2P	1SCA022825R4290	17	Front operated switch fuse
OS630D11P	1SCA116381R1001	17	Front operated switch fuse
OS630D12P	1SCA022825R3810	17	Front operated switch fuse
OS630D22N2P	1SCA022825R4450	17	Front operated switch fuse
OS630DS03	1SCA108128R1001	26	Side operated switch fuse
OS630DS03K	1SCA108129R1001	26	Side operated switch fuse
OS630DS04F	1SCA108131R1001	26	Side operated switch fuse
OS630DS04FK	1SCA108132R1001	26	Side operated switch fuse
OS630DS30	1SCA108135R1001	26	Side operated switch fuse
OS630DS30K	1SCA108136R1001	26	Side operated switch fuse
OS630DS40F	1SCA108137R1001	26	Side operated switch fuse
OS630DS40FK	1SCA108138R1001	26	Side operated switch fuse
OS63GB02P	1SCA116854R1001	19	Front operated switch fuse
OS63GB03K	1SCA116745R1001	21	Front operated switch fuse
OS63GB03P	1SCA115235R1001	19	Front operated switch fuse
OS63GB04N1K	1SCA116746R1001	21	Front operated switch fuse
OS63GB04N1P	1SCA115238R1001	19	Front operated switch fuse
OS63GB11P	1SCA116872R1001	19	Front operated switch fuse
OS63GB12P	1SCA115325R1001	19	Front operated switch fuse
OS63GB22N1P	1SCA114601R1001	19	Front operated switch fuse
OS63GBS30	1SCA115957R1001	27	Side operated switch fuse
OS63GBS30K	1SCA115924R1001	27	Side operated switch fuse
OS63GBS40N1	1SCA115978R1001	27	Side operated switch fuse
OS63GBS40N1K	1SCA115979R1001	27	Side operated switch fuse
OS63GD02P	1SCA116715R1001	16	Front operated switch fuse
OS63GD03K	1SCA116738R1001	18	Front operated switch fuse
OS63GD03P	1SCA115207R1001	16	Front operated switch fuse
OS63GD04FK	1SCA116739R1001	18	Front operated switch fuse
OS63GD04FP	1SCA115228R1001	16	Front operated switch fuse
OS63GD04N2K	1SCA116876R1001	18	Front operated switch fuse
OS63GD04N2P	1SCA115209R1001	16	Front operated switch fuse
OS63GD11P	1SCA116711R1001	16	Front operated switch fuse
OS63GD12P	1SCA115227R1001	16	Front operated switch fuse
OS63GD22FP	1SCA115232R1001	16	Front operated switch fuse
OS63GD22N2P	1SCA115230R1001	16	Front operated switch fuse
OS63GDS30	1SCA116007R1001	25	Side operated switch fuse
OS63GDS30K	1SCA115931R1001	25	Side operated switch fuse
OS63GDS40F	1SCA116877R1001	25	Side operated switch fuse
OS63GDS40N1K	1SCA115932R1001	25	Side operated switch fuse
OS63GDS40N2	1SCA116047R1001	25	Side operated switch fuse
OS63GDS40N2K	1SCA116403R1001	25	Side operated switch fuse
OS800B02P	1SCA022837R6480	20	Front operated switch fuse
OS800B03K	1SCA108713R1001	21	Front operated switch fuse
OS800B03N3P	1SCA100861R1001	20	Front operated switch fuse
OS800B03P	1SCA022825R7550	20	Front operated switch fuse
OS800B04N2K	1SCA108714R1001	21	Front operated switch fuse
OS800B04N2P	1SCA022825R8010	20	Front operated switch fuse
OS800B12P	1SCA022825R8280	20	Front operated switch fuse
OS800B22N2P	1SCA022825R8440	20	Front operated switch fuse
OS800BS03	1SCA108076R1001	28	Side operated switch fuse
OS800BS03K	1SCA108077R1001	28	Side operated switch fuse
OS800BS04N2	1SCA108081R1001	28	Side operated switch fuse
OS800BS04N2K	1SCA108082R1001	28	Side operated switch fuse
OS800BS30	1SCA108083R1001	28	Side operated switch fuse
OS800BS30K	1SCA108084R1001	28	Side operated switch fuse
OS800BS40N2	1SCA108086R1001	28	Side operated switch fuse
OS800BS40N2K	1SCA108087R1001	28	Side operated switch fuse
OS800D02P	1SCA022837R2650	17	Front operated switch fuse
OS800D03K	1SCA108725R1001	18	Front operated switch fuse
OS800D03N3P	1SCA100859R1001	17	Front operated switch fuse
OS800D03P	1SCA022825R4880	17	Front operated switch fuse
OS800D04FP	1SCA022825R5000	17	Front operated switch fuse

Type	Order number	Page	Description
OS800D04N2K	1SCA108722R1001	18	Front operated switch fuse
OS800D04N2P	1SCA022825R5180	17	Front operated switch fuse
OS800D11P	1SCA116655R1001	17	Front operated switch fuse
OS800D12P	1SCA022825R5340	17	Front operated switch fuse
OS800D22N2P	1SCA022825R5510	17	Front operated switch fuse
OS800DS03	1SCA108092R1001	26	Side operated switch fuse
OS800DS03K	1SCA108093R1001	26	Side operated switch fuse
OS800DS04F	1SCA108094R1001	26	Side operated switch fuse
OS800DS04FK	1SCA108095R1001	26	Side operated switch fuse
OS800DS30	1SCA108098R1001	26	Side operated switch fuse
OS800DS30K	1SCA108093R1001	26	Side operated switch fuse
OS800DS40F	1SCA108100R1001	26	Side operated switch fuse
OS800DS40FK	1SCA108101R1001	26	Side operated switch fuse
OS800L02P	1SCA116921R1001	24	Front operated switch fuse
OS800L03P	1SCA022825R9920	24	Front operated switch fuse
OS800L04FP	1SCA022839R5430	24	Front operated switch fuse
OSD25P3	1SCA022192R9060	49	Blown fuse indicator (DPMM)
OSD25P4	1SCA022196R9520	49	Blown fuse indicator (DPMM)
OSGD125P3	1SCA115690R1001	49	Blown fuse indicator (DPMM)
OSGD125P4	1SCA115692R1001	49	Blown fuse indicator (DPMM)
OSGD50P3	1SCA116401R1001	49	Blown fuse indicator (DPMM)
OSGD50P4	1SCA115689R1001	49	Blown fuse indicator (DPMM)
OSGZD1	1SCA115688R1001	50	DIN-rail mounting kit
OSM100GB3M230C	1SCA116679R1001	32	Motorized switch fuse
OSM100GB4N1M230C	1SCA118779R1001	32	Motorized switch fuse
OSM1250B3M230C	1SCA112552R1001	32	Motorized switch fuse
OSM1250B3N3M230C	1SCA112550R1001	32	Motorized switch fuse
OSM1250B4N1M230C	1SCA118795R1001	32	Motorized switch fuse
OSM1250D3M230C	1SCA112549R1001	31	Motorized switch fuse
OSM1250D3N3M230C	1SCA112547R1001	31	Motorized switch fuse
OSM1250D4N2M230C	1SCA118850R1001	31	Motorized switch fuse
OSM1250DA3M230C	1SCA112546R1001	31	Motorized switch fuse
OSM1250DA3N3M230C	1SCA112544R1001	31	Motorized switch fuse
OSM1250DA4N2M230C	1SCA118851R1001	31	Motorized switch fuse
OSM125GB3M230C	1SCA116677R1001	32	Motorized switch fuse
OSM125GB4N1M230C	1SCA118780R1001	32	Motorized switch fuse
OSM125GD3M230C	1SCA116674R1001	31	Motorized switch fuse
OSM125GD4N2M230C	1SCA118828R1001	31	Motorized switch fuse
OSM125GF3M230C	1SCA116681R1001	32	Motorized switch fuse
OSM125GF4N1M230C	1SCA118798R1001	32	Motorized switch fuse
OSM160GB3M230C	1SCA116670R1001	32	Motorized switch fuse
OSM160GB4N1M230C	1SCA118781R1001	32	Motorized switch fuse
OSM160GD3M230C	1SCA116673R1001	31	Motorized switch fuse
OSM160GD4N2M230C	1SCA118831R1001	31	Motorized switch fuse
OSM200B3M230C	1SCA104272R1001	32	Motorized switch fuse
OSM200B3N3M230C	1SCA104323R1001	32	Motorized switch fuse
OSM200B4N1M230C	1SCA118784R1001	32	Motorized switch fuse
OSM200D3M230C	1SCA104284R1001	31	Motorized switch fuse
OSM200D3N3M230C	1SCA104282R1001	31	Motorized switch fuse
OSM200D4N2M230C	1SCA118836R1001	31	Motorized switch fuse
OSM250B3M230C	1SCA104287R1001	32	Motorized switch fuse
OSM250B3N3M230C	1SCA104290R1001	32	Motorized switch fuse
OSM250B4N1M230C	1SCA118785R1001	32	Motorized switch fuse
OSM250D3M230C	1SCA104295R1001	31	Motorized switch fuse
OSM250D3N3M230C	1SCA104297R1001	31	Motorized switch fuse
OSM250D4N2M230C	1SCA118838R1001	31	Motorized switch fuse
OSM315B3M230C	1SCA104303R1001	32	Motorized switch fuse
OSM315B3N3M230C	1SCA104306R1001	32	Motorized switch fuse
OSM315B4N1M230C	1SCA118788R1001	32	Motorized switch fuse
OSM32GB3M230C	1SCA116662R1001	32	Motorized switch fuse
OSM32GB4N1M230C	1SCA118775R1001	32	Motorized switch fuse
OSM32GD3M230C	1SCA116664R1001	31	Motorized switch fuse
OSM32GD4N2M230C	1SCA118822R1001	31	Motorized switch fuse
OSM400B3M230C	1SCA104310R1001	32	Motorized switch fuse
OSM400B3N3M230C	1SCA104312R1001	32	Motorized switch fuse
OSM400B4N1M230C	1SCA118789R1001	32	Motorized switch fuse
OSM400D3M230C	1SCA104315R1001	31	Motorized switch fuse
OSM400D3N3M230C	1SCA104317R1001	31	Motorized switch fuse
OSM400D4N2M230C	1SCA118842R1001	31	Motorized switch fuse
OSM50GF3M230C	1SCA116666R1001	32	Motorized switch fuse
OSM50GF4N1M230C	1SCA118871R1001	32	Motorized switch fuse
OSM630B3M230C	1SCA104516R1001	32	Motorized switch fuse
OSM630B3N3M230C	1SCA104535R1001	32	Motorized switch fuse
OSM630B4N1M230C	1SCA118791R1001	32	Motorized switch fuse
OSM630D3M230C	1SCA104518R1001	31	Motorized switch fuse
OSM630D3N3M230C	1SCA104533R1001	31	Motorized switch fuse
OSM630D4N2M230C	1SCA118846R1001	31	Motorized switch fuse
OSM63GB3M230C	1SCA116657R1001	32	Motorized switch fuse
OSM63GB4N1M230C	1SCA118776R1001	32	Motorized switch fuse
OSM63GD3M230C	1SCA116660R1001	31	Motorized switch fuse
OSM63GD4N2M230C	1SCA118865R1001	31	Motorized switch fuse
OSM800B3M230C	1SCA104520R1001	32	Motorized switch fuse
OSM800B3N3M230C	1SCA104536R1001	32	Motorized switch fuse
OSM800B4N1M230C	1SCA118792R1001	32	Motorized switch fuse
OSM800D3M230C	1SCA104522R1001	31	Motorized switch fuse
OSM800D3N3M230C	1SCA104534R1001	31	Motorized switch fuse
OSM800D4N2M230C	1SCA118847R1001	31	Motorized switch fuse
OSP1250B	1SCA107950R1001	42	Fourth pole
OSP1250D	1SCA107946R1001	42	Fourth pole
OSP1250DA	1SCA112402R1001	42	Fourth pole
OSP1250N	1SCA107943R1001	42	Fourth pole
OSP160GB	1SCA114769R1001	42	Fourth pole
OSP160GD	1SCA114768R1001	42	Fourth pole
OSP160GN	1SCA114770R1001	42	Fourth pole
OSP200B	1SCA022735R9180	42	Fourth pole
OSP200D	1SCA022735R8960	42	Fourth pole
OSP200N	1SCA022735R8700	42	Fourth pole
OSP250B	1SCA022770R4030	42	Fourth pole
OSP250D	1SCA022735R9340	42	Fourth pole
OSP250N	1SCA022735R9260	42	Fourth pole
OSP400B	1SCA022770R3140	42	Fourth pole
OSP400D	1SCA022770R3220	42	Fourth pole
OSP400N	1SCA022770R3490	42	Fourth pole
OSP800B	1SCA100434R1001	42	Fourth pole
OSP800D	1SCA100433R1001	42	Fourth pole
OSP800N	1SCA100432R1001	42	Fourth pole
OSS1250G1L/3	1SCA107938R1001	44	Terminal shroud
OSS1250G1L/4	1SCA107940R1001	44	Terminal shroud
OSS1250G1S/3	1SCA107939R1001	44	Terminal shroud
OSS1250G1S/4	1SCA107941R1001	44	Terminal shroud
OSS160GG1L/3	1SCA114764R1001	44	Terminal shroud
OSS160GG1L/4	1SCA114765R1001	44	Terminal shroud
OSS160GG1S/3	1SCA114766R1001	44	Terminal shroud
OSS160GG1S/4	1SCA114767R1001	44	Terminal shroud
OSS200G1L/3	1SCA022731R8910	44	Terminal shroud
OSS200G1L/4	1SCA022731R9040	44	Terminal shroud
OSS200G1S/3	1SCA022732R0130	44	Terminal shroud
OSS200G1S/4	1SCA022732R0050	44	Terminal shroud
OSS250G1L	1SCA022727R5080	44	Terminal shroud
OSS250G1L/3	1SCA022731R9390	44	Terminal shroud
OSS250G1L/4	1SCA022731R9470	44	Terminal shroud
OSS250G1S	1SCA022727R4940	44	Terminal shroud
OSS250G1S/3	1SCA022731R9550	44	Terminal shroud
OSS250G1S/4	1SCA022731R9630	44	Terminal shroud
OSS400G1L/3	1SCA022776R6650	44	Terminal shroud
OSS400G1L/4	1SCA022776R6730	44	Terminal shroud
OSS400G1S/3	1SCA022776R6900	44	Terminal shroud
OSS400G1S/4	1SCA022776R7030	44	Terminal shroud
OSS800G1L/3	1SCA022776R7200	44	Terminal shroud
OSS800G1L/4	1SCA022776R7380	44	Terminal shroud
OSS800G1S/3	1SCA022776R7540	44	Terminal shroud
OSS800G1S/4	1SCA022776R7460	44	Terminal shroud
OSV1250DK	1SCA107797R1001	37	Handle
OSV200BK	1SCA022779R7530	37	Handle
OSV250DK	1SCA022763R3510	37	Handle
OSV400BK	1SCA022763R3930	37	Handle
OSV400DK	1SCA022763R4230	37	Handle
OSV800DK	1SCA107794R1001	37	Handle
OSVY1250DK	1SCA108702R1001	37	Handle
OSVY200BK	1SCA022779R7700	37	Handle
OSVY250DK	1SCA022778R6500	37	Handle
OSVY400BK	1SCA022779R5830	37	Handle
OSVY400DK	1SCA022779R5590	37	Handle
OSVY800DK	1SCA108703R1001	37	Handle

Type	Order number	Page	Description
OSZ1	1SCA022481R3710	42	Neutral link
OSZ2	1SCA022481R3800	42	Neutral link
OSZ4	1SCA022530R0200	40	Mounting frame for auxiliary contacts
OSZ4	1SCA022530R0200	49	Mounting accessory for fuse monitor
OSZT1A	1SCA106532R1001	50	Mechanism interlock kit & Electrical
OSZT1L	1SCA106538R1001	50	Mechanism interlock kit & Electrical
OSZT2A	1SCA106534R1001	50	Mechanism interlock kit & Electrical
OSZT2L	1SCA106539R1001	50	Mechanism interlock kit & Electrical
OSZT3A	1SCA106535R1001	50	Mechanism interlock kit & Electrical
OSZT3L	1SCA106540R1001	50	Mechanism interlock kit & Electrical
OSZT4A	1SCA106536R1001	50	Mechanism interlock kit & Electrical
OSZT4L	1SCA106541R1001	50	Mechanism interlock kit & Electrical
OSZX3	1SCA101224R1001	49	Blown fuse indicator (DPMM)
OSZX4	1SCA101225R1001	49	Blown fuse indicator (DPMM)
OTS1600G1L	1SCA106134R1001	44	Terminal shroud
OTS1600G1S	1SCA102667R1001	44	Terminal shroud
OTS250G1L	1SCA022715R5340	44	Terminal shroud
OTS250G1S	1SCA022715R5260	44	Terminal shroud
OTS800G1L	1SCA022776R7710	44	Terminal shroud
OTS800G1S	1SCA022776R8010	44	Terminal shroud
OTVS1	1SCA111413R1001	43	Solid link
OTVS2	1SCA111414R1001	43	Solid link
OTZT1A	1SCA106522R1001	50	Mechanism interlock kit & Electrical
OTZT1L	1SCA106527R1001	50	Mechanism interlock kit & Electrical
OTZW10	1SCA022431R5280	47	Conversion kit
OTZW25	1SCA022778R6920	47	Conversion kit
OTZW26	1SCA022778R7060	47	Conversion kit
OWC6DSH1	1SCA105251R1001	47	Conversion kit
OWC6DSH2	1SCA105252R1001	47	Conversion kit
OWM6DS1	1SCA105253R1001	47	Conversion kit
OWM6DS2	1SCA105254R1001	47	Conversion kit
OWP6DS1	1SCA105255R1001	47	Conversion kit
OWP6DS2	1SCA105256R1001	47	Conversion kit
OXN1250S	1SCA104163R1001	42	Neutral link
OXN250	1SCA022752R9950	42	Neutral link
OXN250	1SCA022752R9950	42	Neutral link
OXN400	1SCA022770R3060	42	Neutral link
OXN800S	1SCA022831R4880	42	Neutral link
OXP12X250	1SCA022325R6980	39	Extended shaft
OXP12X280	1SCA022137R5140	39	Extended shaft
OXP12X280-45	1SCA022382R0800	39	Extended shaft
OXP12X325	1SCA022042R5810	39	Extended shaft
OXP12X325-45	1SCA022304R4450	39	Extended shaft
OXP12X395	1SCA022042R5990	39	Extended shaft
OXP12X465	1SCA022042R6020	39	Extended shaft
OXP12X535	1SCA022042R6110	39	Extended shaft
OXP6X130	1SCA022057R0570	38	Extended shaft
OXP6X150-45	1SCA022294R4400	38	Extended shaft
OXP6X150	1SCA022295R5600	38	Extended shaft
OXP6X161	1SCA022067R1760	38	Extended shaft
OXP6X170	1SCA108224R1001	38	Extended shaft
OXP6X170-45	1SCA108227R1001	38	Extended shaft
OXP6X210	1SCA022295R6080	38	Extended shaft
OXP6X210-45	1SCA022294R4230	38	Extended shaft
OXP6X265	1SCA108225R1001	38	Extended shaft
OXP6X265-45	1SCA108228R1001	38	Extended shaft
OXP6X290	1SCA022042R6370	38	Extended shaft
OXP6X290-45	1SCA022304R4290	38	Extended shaft
OXP6X360	1SCA022042R6530	38	Extended shaft
OXP6X360-45	1SCA022341R4640	38	Extended shaft
OXP6X400	1SCA108226R1001	38	Extended shaft
OXP6X400-45	1SCA108229R1001	38	Extended shaft
OXP6X430	1SCA022056R6030	38	Extended shaft
OXP6X63	1SCA111010R1001	38	Extended shaft
OXP6X90	1SCA022064R1180	38	Extended shaft
OZXB1L	1SCA022169R2030	45	Terminal clamp set
OZXB1L/1	1SCA022194R0030	45	Terminal clamp set
OZXB2	1SCA022119R7610	45	Terminal clamp set
OZXB2/1	1SCA022194R0200	45	Terminal clamp set
OZXB2K	1SCA022264R0010	44	Terminal shroud for terminal clamps
OZXB2K/1	1SCA022644R6700	44	Terminal shroud for terminal clamps
OZXB2L	1SCA022158R7750	45	Terminal clamp set
OZXB2L/1	1SCA022194R0460	45	Terminal clamp set
OZXB3	1SCA022136R8100	45	Terminal clamp set
OZXB3	1SCA022136R8100	46	Terminal clamp set
OZXB3/1	1SCA022194R0620	45	Terminal clamp set
OZXB3/1	1SCA022194R0620	46	Terminal clamp set
OZXB3K	1SCA022264R0440	44	Terminal shroud for terminal clamps
OZXB3K/1	1SCA022644R6880	44	Terminal shroud for terminal clamps
OZXB4	1SCA022137R4760	45	Terminal clamp set
OZXB4	1SCA022137R4760	46	Terminal clamp set
OZXB4/1	1SCA022194R0890	45	Terminal clamp set
OZXB4/1	1SCA022194R0890	46	Terminal clamp set
OZXB4K	1SCA022199R2850	44	Terminal shroud for terminal clamps
OZXB4K/1	1SCA022644R6960	44	Terminal shroud for terminal clamps
OZXB5	1SCA022137R2470	45	Terminal clamp set
OZXB5	1SCA022137R2470	46	Terminal clamp set
OZXB5/1	1SCA022194R1010	45	Terminal clamp set
OZXB5/1	1SCA022194R1010	46	Terminal clamp set
OZXB5K	1SCA022283R8040	44	Terminal shroud for terminal clamps
OZXB5K/1	1SCA022644R7000	44	Terminal shroud for terminal clamps
OZXB6	1SCA022137R4920	45	Terminal clamp set
OZXB6	1SCA022137R4920	46	Terminal clamp set
OZXB6/1	1SCA022194R1270	45	Terminal clamp set
OZXB6/1	1SCA022194R1270	46	Terminal clamp set
OZXB7	1SCA022185R0040	45	Terminal clamp set
OZXB7/1	1SCA022194R1430	45	Terminal clamp set
OZXB7L	1SCA022185R7130	45	Terminal clamp set
OZXB7L	1SCA022185R7130	46	Terminal clamp set
OZXB7L/1	1SCA022194R1600	45	Terminal clamp set
OZXB7L/1	1SCA022194R1600	46	Terminal clamp set
OZXB8	1SCA022744R1510	45	Terminal clamp set
OZXB8	1SCA022744R1510	46	Terminal clamp set
OZXB8/1	1SCA022744R1600	45	Terminal clamp set
OZXB8/1	1SCA022744R1600	46	Terminal clamp set
OZXB9	1SCA022750R3210	45	Terminal clamp set
OZXB9	1SCA022750R3210	46	Terminal clamp set
OZXB9/1	1SCA022750R3300	45	Terminal clamp set
OZXB9/1	1SCA022750R3300	46	Terminal clamp set
OZXP120	1SCA115540R1001	46	Terminal clamp set
OZXP150	1SCA115541R1001	46	Terminal clamp set
OZXP240	1SCA115542R1001	46	Terminal clamp set
OZXP2X240	1SCA115544R1001	46	Terminal clamp set
OZXP300	1SCA115543R1001	46	Terminal clamp set
OZXP95	1SCA115539R1001	46	Terminal clamp set
OZXR185	1SCA115531R1001	46	Terminal clamp set
OZXR240	1SCA115532R1001	46	Terminal clamp set
OZXR2X185	1SCA115534R1001	46	Terminal clamp set
OZXR2X300	1SCA115535R1001	46	Terminal clamp set
OZXR300	1SCA115533R1001	46	Terminal clamp set
OZXR70	1SCA115529R1001	46	Terminal clamp set
OZXR95	1SCA115530R1001	46	Terminal clamp set
OZXT1	1SCA022469R6310	45	Terminal clamp set
OZXT1/1	1SCA022469R6490	45	Terminal clamp set
PB100 low	1SDA054970R1	44	Phase barrier
PB100 low	1SDA054971R1	44	Phase barrier
PB200 high	1SDA054972R1	44	Phase barrier
PB200 high	1SDA054973R1	44	Phase barrier
PDAL2/110AC50Hz	1SCA106543R1001	50	Coil
PDAL2/110AC60Hz	1SCA107100R1001	50	Coil
PDAL2/110DC	1SCA107105R1001	50	Coil
PDAL2/120AC60Hz	1SCA111353R1001	50	Coil
PDAL2/125DC	1SCA111338R1001	50	Coil
PDAL2/208AC60Hz	1SCA107101R1001	50	Coil
PDAL2/220DC	1SCA112503R1001	50	Coil
PDAL2/230AC50Hz	1SCA107102R1001	50	Coil
PDAL2/240AC60Hz	1SCA111356R1001	50	Coil
PDAL2/24AC60Hz	1SCA111350R1001	50	Coil
PDAL2/24DC	1SCA106542R1001	50	Coil
PDAL2/48DC	1SCA107103R1001	50	Coil
PDAL2/60DC	1SCA107104R1001	50	Coil
YASDA 7	1SCA022071R3010	36	Handle
YASDA 8	1SCA022071R3270	36	Handle
YASDA35	1SCA104400R1001	36	Handle

Contact us

ABB Oy
Low Voltage Switches
P.O. Box 622
FI-65101 Vaasa, Finland
Phone: +358 10 22 11
Fax: +358 10 22 45708
E-Mail: firstname.surname@fi.abb.com

www.abb.com

The technical data and dimensions are valid at the time of printing. We reserve the right to subsequent alterations.

Producted by A&V Insinöörit Oy / Tekninen viestintä, Vaasa, Finland
Catalogue OS1GB 10-12, 1SCC311013C0201

Power and productivity for a better world™