Pressure transmitter Model A–10
Type A–10
Item no.: 48779963

MEASURING RANGE	
Measuring range	0...1.6 bar abs
Overpressure limit	2 times
Vacuum tightness	yes
OUTPUT SIGNAL	
Output signal	4 ... 20 mA, 2-wire
Permissible load in Ω	≤ (power supply - 8 V) / 0.02 A
Settling time	< 1 ms
POWER SUPPLY	
Power supply	8...30 V DC
Total current consumption	Current signal, max. 25 mA
ACCURACY INFORMATION	
Non-linearity	0.5% BFSL
Accuracy at room temperature	≤ ±1.0 % of span
Measuring deviation of the zero signal	≤ ±0.3 % of span
Long-term drift	≤ ±0.1 % of span
TEMPERATURE ERROR	
	typ. 1 %, max. 2.5 %
OPERATING ENVIRONMENT CONDITIONS	
Permissible medium temperature	0...+80 °C
Permissible ambient temperature	0 ... 80 °C
Vibration resistance	10 g (IEC 60068-2-6, under resonance)
Shock resistance	500 g (IEC 60068-2-27, mechanical)
Service life	100 million load cycle
MATERIALS	
Wetted parts	Stainless steel 316L
Non-wetted parts	Stainless steel 316L, HNBR, PA
PROCESS CONNECTION	
Process connection	G 1/4 A DIN EN ISO 1179-2
Sealing	NBR
ELECTRICAL CONNECTION	
Electrical connection	flying lead, IP 67
Cable length	2 m
Ingress Protection	IP67
pin assignment	UB=BN, 0V=BU
ELECTRICAL SAFETY	
Short-circuit resistance	S+ vs. U-
Reverse polarity protection	U+ vs. U- (no reverse polarity protection with ratiometric output signal)
Insulation voltage	DC 500 V
CE-CONFORMITY, APPROVALS AND CERTIFICATES	
CE conformity	PED 2014/68/EU
Approvals	cULus

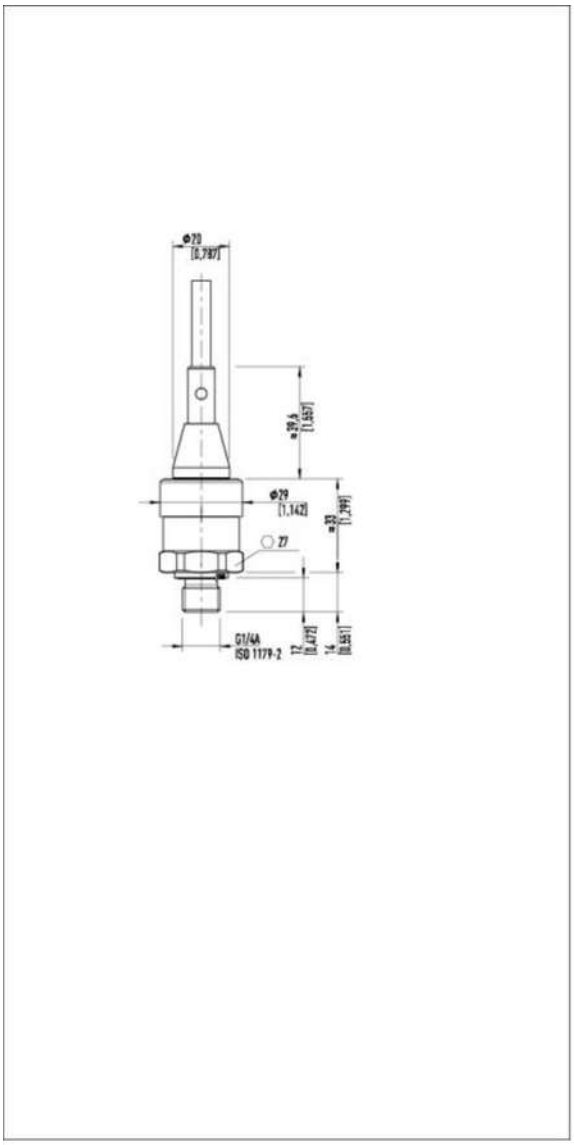

WIKA Instruments – 38 Avenue du Gros Chêne – 95220 HERBLAY
Phone0 820 95 10 10
info_fr@wika.com • http://www.wika.fr