O6S203

Through-beam sensor transmitter

O6S-OOKG/AS/4P

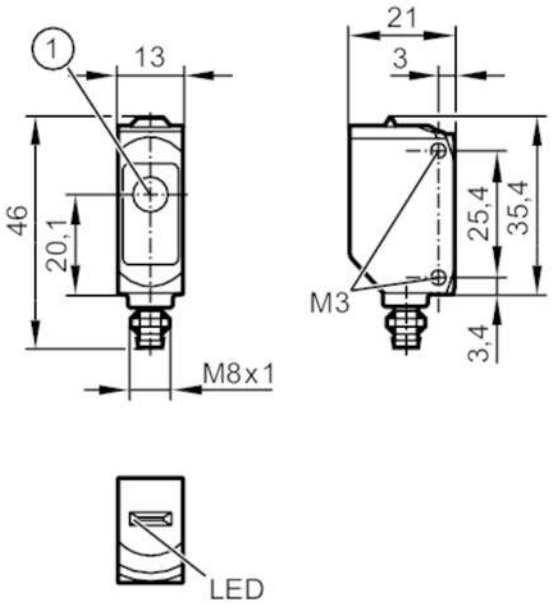

1: light emission

Product characteristics			
Type of light		red light	
Housing		rectangular	
Application			
Function principle		Through-beam sensor	
Electrical data			
Operating voltage	[V]	10...30 DC	
Current consumption	[mA]	11; ((24 V))	
Protection class		III	
Type of light		red light	
Wave length	[nm]	633	
Detection zone			
Transmitter / receiver		transmitter	
Range	[m]	< 10	
Max. light spot diameter	[mm]	300	
Light spot dimensions refer to		at maximum range	
Operating conditions			
Ambient temperature	[°C]	-25...60	
Protection		IP 65; IP 67	
Tests / approvals			
EMC		EN 60947-5-2	
MTTF	[years]	2600	
UL approval		UL Approval no.	E002

O6S203

Through-beam sensor transmitter

O6S-OOKG/AS/4P

Mechanical data		
Weight	[g]	17.6
Housing		rectangular
Dimensions	[mm]	35.4 x 13 x 21
Materials		housing: ABS; PPSU
Lens material		PMMA
Lens alignment		side lens
Sealing material		EPDM
Tightening torque	[Nm]	0.5

Displays / operating elements		
Display	operation	1 x LED, green

Remarks	
Remarks	operating voltage "supply class 2" according to cULus
Pack quantity	1 pcs.

Electrical connection

Connector: 1 x M8; coding: A; Locking: brass, coated; Sealing: EPDM

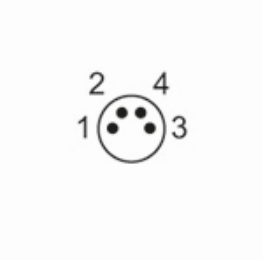

Connection

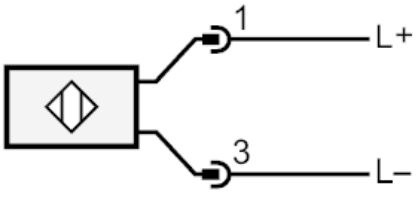

O6S203

Through-beam sensor transmitter

O6S-OOKG/AS/4P

Diagrams and graphs

excess gain graph

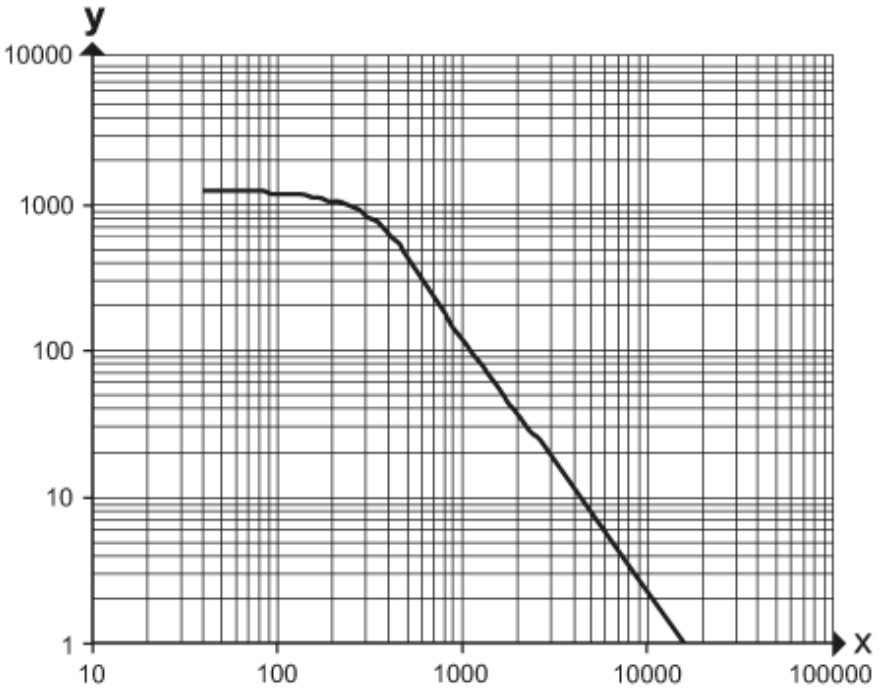

x: distance [mm]

y: excess gain factor