PRODUCT DETAILS

**ARTICLE: 12286FR**

## WHEEL B 200X50/60 RB SWIVEL FORK M22 + BRAKE



### Wheel series B

Wheels with black rubber ring on welded steel discs fitted with ball bearings, roller bearings or nylon friction bearings.
Wheel fitted with standard roller bearing.

### Castor series M22

M22 series, Medium-light pressed steel fork assemblies; swivel version has double ball raceways. Zincplated.
Trailing foot brake - total stop.

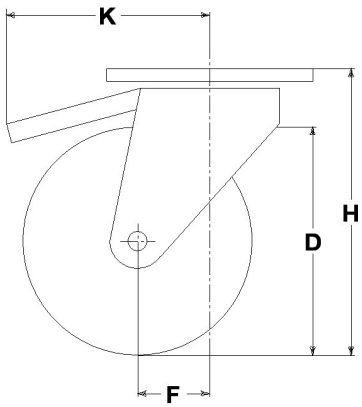


### Technical data

| | | |
|---|---|---|
| Wheel diameter | D | 200 mm |
| Tyre width | E | 50,0 mm |
| Bore diameter | d | 20 mm |
| Weight article | | 3,370 kg |
| Hub width | L | 60 mm |
| Overall height | H | 240 mm |
| Top plate outer dimensions | AxB | 135x110 mm |
| Bolt hole spacing | axb | 105x75 mm |
| Bolt hole spacing | axb | 105x80 mm |
| Fixing bolt diameter | g | M10 |
| Offset | F | 59 mm |
| Fork width | U | 60 mm |
| Load Capacity | | 230 kg |

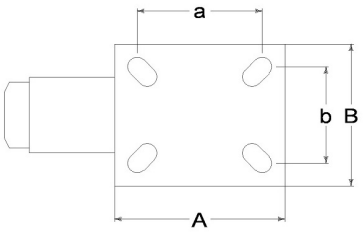


#### Related Articles

Spare part wheel: 12086
Basic version: 12286
Version with thread-guards: 12286PF
Version with footguard: 12286PP
Version with trailing brake and thread-guards: 12286FRPF
Version with trailing brake and footguard: 12286FRPP

**GENERAL INFORMATION / RECOMMENDATIONS AND WARNINGS**
The cited text and the complete catalogue in their most up-dated versions are available in the OEM's website page www.lagspa.it/downloads. The dimensions, descriptions, specifications and illustrations herein are indicative and subject to variations without notice. The fact that products are illustrated herein does not necessarily imply they are available from stock nor does it place us under any obligation to supply them.
Tests carried out refer to the original products with original accessories: the replacement of one of the components with others of different manufacture might prevent the same results from being achieved and will automatically invalidate any guarantee. Please contact our technical service concerning any special application.