Magnifier luminaire

SNL 319 111961000-00065101

Waldmann
ENGINEER OF LIGHT.



fitted with	3 x compact fluorescent lamp TC-S 9W/840 G23 light colour neutral white, 4000 K, Color Rendering Index (CRI)=85 Energy efficiency category A
work equipment	conventional ballast Energy efficiency index (EEI): B2
connected load	230 V/ 50 Hz
power consumption	approx. 36 W
system of protection	IP 20
class of protection	I
technology	multi-stage switchable
usage	switch
luminaire body	plastic, light grey
lamp cover	screen, milky
tubular sections	steel tube, painted, light grey
balance of articulation joints	spring
weight (net)	approx. 4.5 kg
mains lead	approx. 3.0 m; mains plug CEE 7/VII
fastening	screw-down flange, table clamp (accessory), wall bracket (accessory)
lens; dimensions	162 x 105
lens; diopters	3
add-on lens; dimensions	not available
special features	light output controlled with 2-way-switch



CEE 7/VII

illuminance

measuring conditions: d=15cm

Em: **4252 lx**
Emax: 6096 lx
Emin: 1967 lx

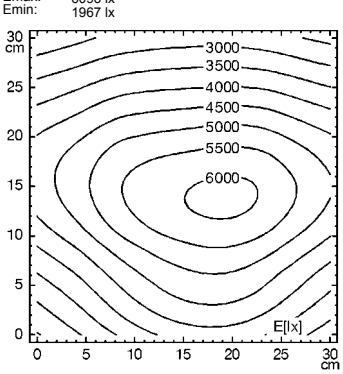

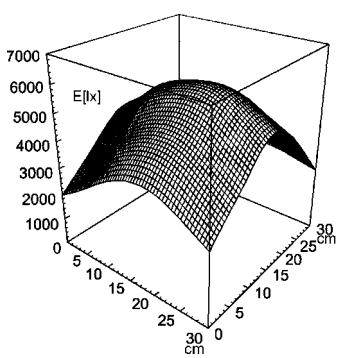

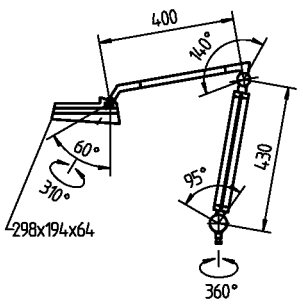

Errors and technical changes excepted. Images can vary from original.

© 10.2014 H. Waldmann GmbH & Co. KG