HKP

1/4" x 1 1/4" Panel-mount fuse holders

RoHS



Product features

- For 1/4" x 1 1/4" (6.3 mm x 32 mm) fuses
- Maximum panel thickness 5/16" (7.9 mm) thick
- Bayonet-type knob
- Vibration resistant
- Military version is designated FHN26G1
- Standard plastic nut
- Optional metal nut
- Cap – 9435-1/2
- Neoprene washer – 9732

Agency information

- UL Recognized: IZLT2, E14853
- CSA Component Acceptance: Class 6225-01, File 47235
- CE (HKP, HKP-L, HKP-W, HKP-OO)

Environmental data

- Temperature rating (RTI): The mounting body for all devices has a temperature rating of 150 °C. The knob for these devices are molded plastic with a temperature rating of 150 °C.
- Meets UL 94HB
- Terminal Strength: 5 pounds
- Torque: Mounting – 20 inch-pound
- Salt Spray (corrosion): Test condition B

Ordering information

- Specify packaging, product, and option code
- Optional metal nut, order separately part number BK/1A4806-2 (100 parts minimum)

	Specifications		
Product Code	Feature	Voltage Rating	Current Rating
HKP	Standard	250 V	30 A
HKP-BBHH	¼" Quick-Connects, nut and washer assembled	250 V	15 A
HKP-HH	¼" Quick-Connects	250 V	15 A
HKP-L	2250 stand-off barrier	250 V	30 A
HKP-LW-HH	Drip-proof knob, 2250V stand-off barrier and ¼" quick connects[1]	250 V	15 A
HKP-OO	Snap-lock	250 V	30 A
HKP-W	Drip-proof knob[1]	250 V	30 A

1. IP53 rating for exposed locations

Dimensions - in (mm)

Drawing Not to Scale

HKP-BBHH, HKP-HH, HKP-LW-HH

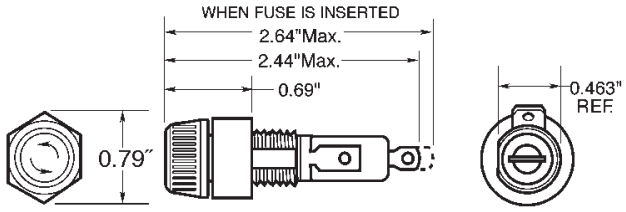

Punched Mounting Hole

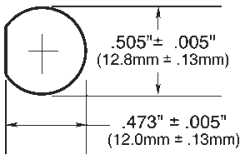

HKP, HKP-L, and HKP-W

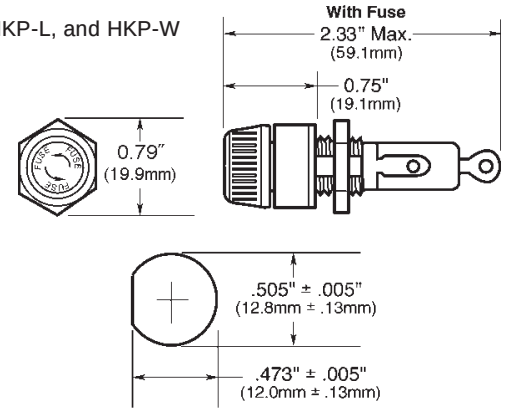

HKP-OO

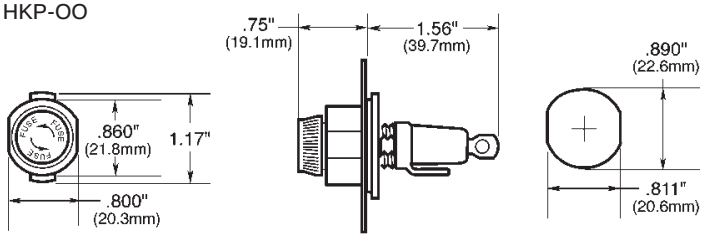

Component	Material
Terminal	Tin-Plated Brass
Body	Thermoset
Cap	Thermoset
Nut	Thermoplastic

Packaging	
Packaging Code Prefix	Description
Blank	10 fuseholders packed into a carton
BK	100 fuseholder components packed separately into a carton

Option Code

Option Code Suffix	Description
-R	RoHS compliant version

Life Support Policy: Eaton does not authorize the use of any of its products for use in life support devices or systems without the express written approval of an officer of the Company. Life support systems are devices which support or sustain life, and whose failure to perform, when properly used in accordance with instructions for use provided in the labeling, can be reasonably expected to result in significant injury to the user.

Eaton reserves the right, without notice, to change design or construction of any products and to discontinue or limit distribution of any products. Eaton also reserves the right to change or update, without notice, any technical information contained in this bulletin.

Eaton
Electronics Division
1000 Eaton Boulevard
Cleveland, OH 44122
United States
www.eaton.com/electronics

© 2017 Eaton
All Rights Reserved
Printed in USA
Publication No. 2106 BU-SB07473
June 2017

Eaton is a registered trademark.

All other trademarks are property of their respective owners.

Powering Business Worldwide