Datenblatt - Fiche technique - Data sheet

11.04.5687



ROLINE HDMI Ultra HD Kabel mit Ethernet, ST/ST, 20,0 m

ROLINE Câble HDMI Ultra HD avec Ethernet, M/M, 20,0 m

ROLINE HDMI Ultra HD Cable + Ethernet, M/M, 20.0 m

REV.	DESCRIPTION	DATE
A		2016-7-27
B		

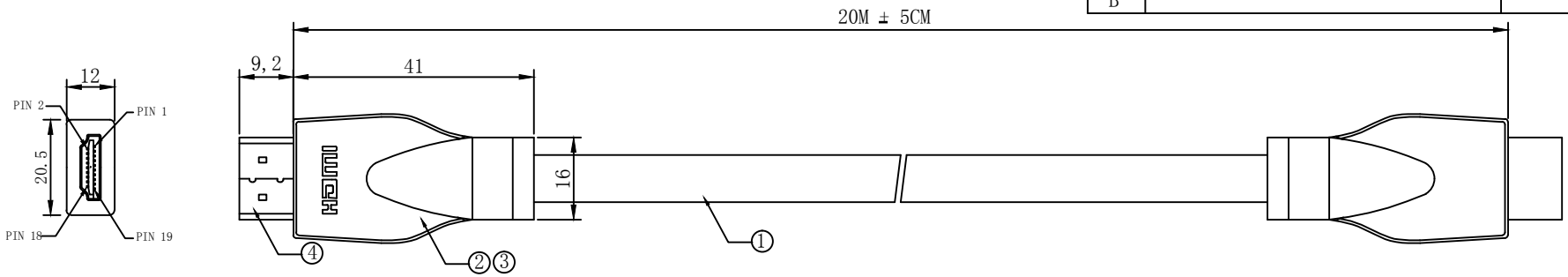

Cable Specifications:

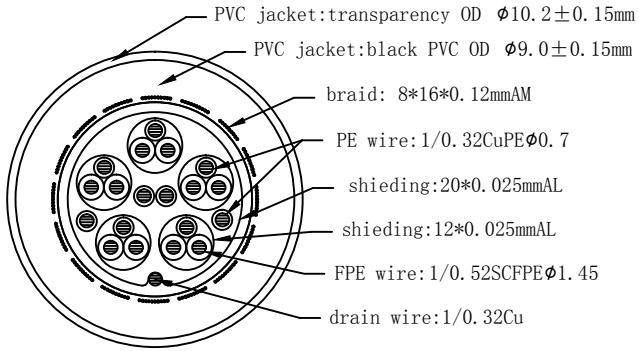

Pin Assignment

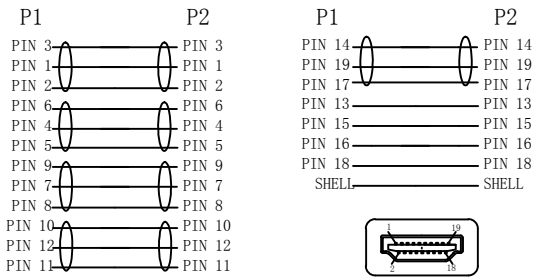

test standard:
1、100% pass open circuit, short circuit, dislocation test.
2、On-resistance: 3Ω Max
3、Insulation resistance: 5MBΩ Min/DC300V/10ms
4、100% pass 4k TV test

NO.	BOM LIST SPECIFICATIONS
1	HDMI2.0V 24-28AWG OD:10.2 (1/0.52SC*1P+1/0.32Cu+AL)*5+1/0.32Cu*4C+AL+D1/0.32Cu+128AM+PVC
2	Gun black zinc alloy shell
3	clear PE inner molding
4	HDMI 19 Pin connector nickel plated

ITEM NUMBER	11.04.5687			DRAWER	YU
TITLE	ROLINE HDMI Ultra HD Cable + Ethernet, 20m, black			CHECKED	
				APPROVED	
MATERIAL		SCALE			
REV.	A	UNIT	INCH		
DRAWING NO:					

SECOMP