FS Relay Unit
Part Number : S1384
Product Data Sheet

DIMENSIONS

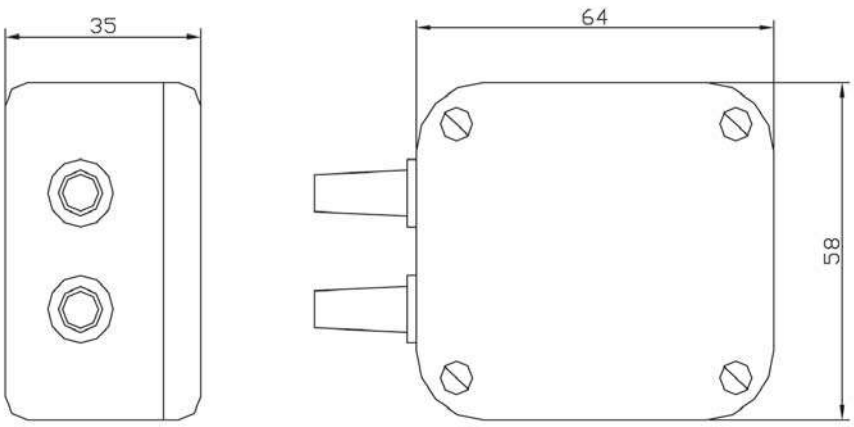

Drawings not to scale
All dimensions in mm nominal

SPECIFICATION

Supply Voltage	12Vdc
Switching Current	5 A Max
Switching Voltage	240 V Max
Operating Temperature	-10°C to +50°C
Storage Temperature	-25°C to +70°C
Case Material	ABS
Relay Coil Diode Protected	
Output Contacts Varistor Protected	
IP65 sealed case subject to cable exit	

FS Relay Unit is designed to be used in conjunction with standard liquid sensors in order to enhance and increase their switching capabilities. It can also be used with most of our proximity and tilt switches.

Applications

- Position and limit sensing.
- Security system switch.
- Levelling systems.

Rev. No.	Revision Note	Date	Signature
2	Revised text	7-01-11	ML

FORM AE043 ISS.2

As part of the company policy of continued product improvement, specifications may change without notice. Our sales office will be pleased to help you with the latest information on this product range and the details of our full design and manufacturing service. All products are supplied to our standard conditions of sale unless otherwise agreed in writing.

ISO 9001:2000
Reg. No. FM 21080

Phone : +44 (0)1255 862236 www.assemtech.co.uk Fax: +44 (0)1255 862014

©2006 Copyright Assemtech Europe Ltd, Unit 7, Rice Bridge Industrial Estate, Thorpe - Le - Soken, Essex, CO16 0HL, ENGLAND.