Keysight Technologies
Choosing the Best Passive and Active Oscilloscope Probes for Your Tasks

Application Note

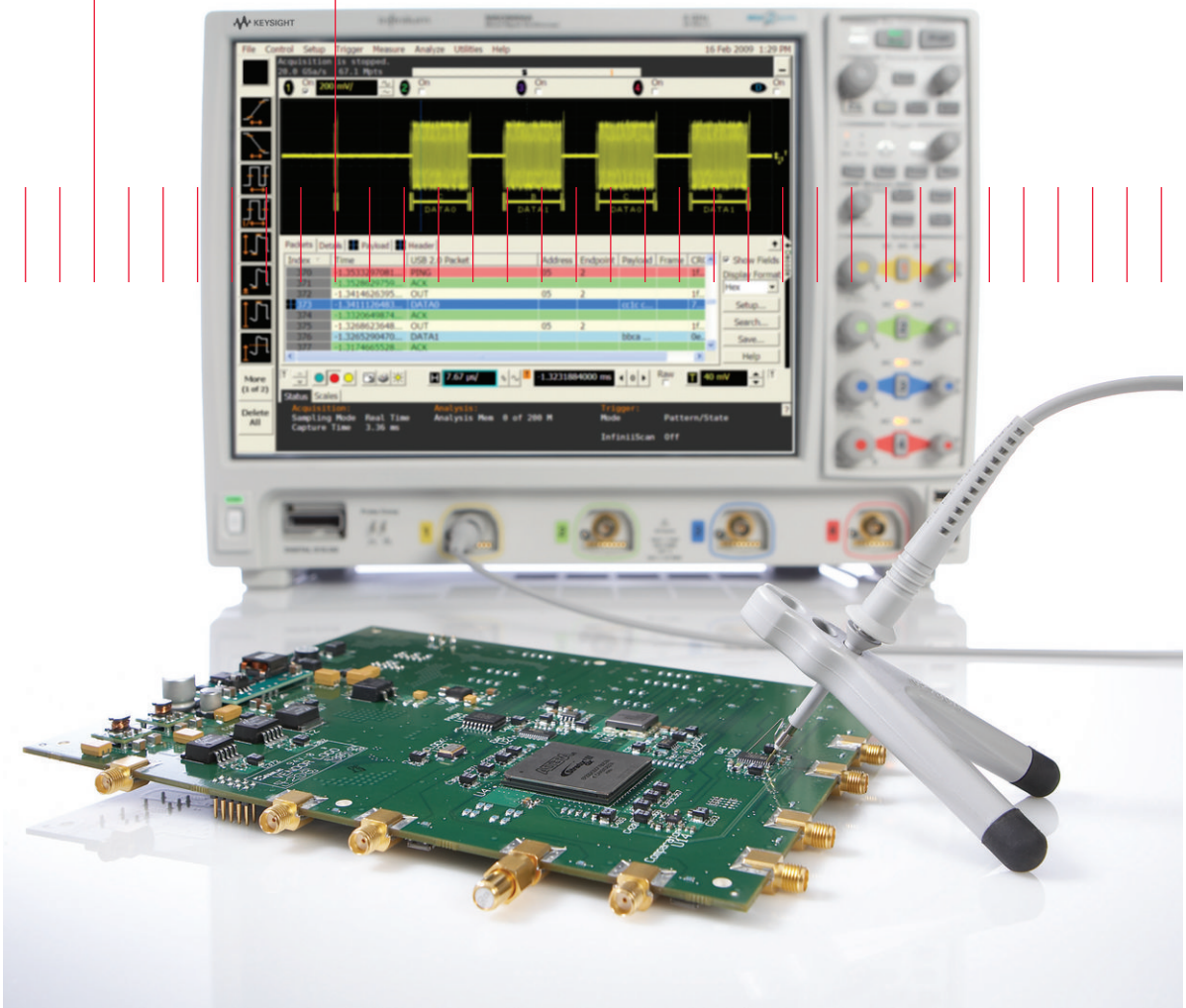

KEYSIGHT TECHNOLOGIES

Introduction

The passive voltage probe is the most commonly used type of scope probe today

Selecting the right probe for your application is the first step toward making reliable oscilloscope measurements. Although you can choose from a number of different types of oscilloscope probes, they fall into two major categories: passive and active. Passive probes do not require external probe power. Active probes do require external probe power for the active components in the probe, such as transistors and amplifiers, and provide higher bandwidth performance than passive probes. Each category offers many different types of probes, and each probe has an application for which it performs best.

Passive Probes

The most common type of scope probe today is the passive voltage probe. Passive probes can be divided into two main types: high-impedance-input probes and low-impedance resistor-divider probes. The high-impedance-input passive probe with a 10:1 division ratio is probably the most commonly used probe today. This probe is shipped with most low- to mid-range oscilloscopes today. The probe tip resistance is typically 9 MΩ, which gives a 10:1 division ratio (or attenuation ratio) with the scope's input when the probe is connected to the 1 MΩ input of a scope. The net input resistance seen from the probe tip is 10 MΩ. The voltage level at the scope's input is then 1/10th the voltage level at the probe tip, which can be expressed as follows: Vscope = Vprobe * (1 MΩ/ (9 MΩ + 1 MΩ))

Passive Probes

Compared to active probes, passive probes are more rugged and less expensive. They offer a wide dynamic range (>300 V for a typical 10:1 probe) and high input resistance to match a scope's input impedance. However, high-impedance-input probes impose heavier capacitive loading and have lower bandwidths than active probes or low-impedance (z0) resistor-divider passive probes.

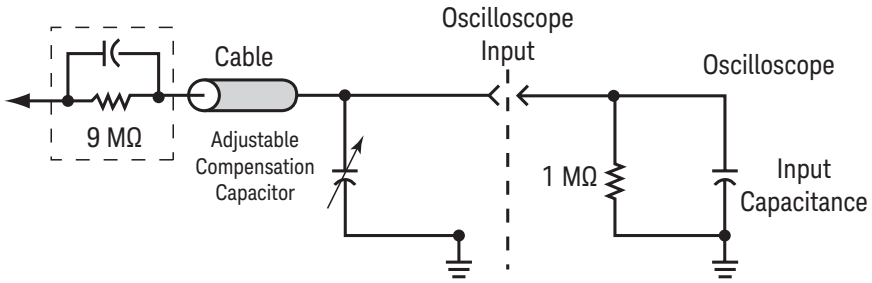

Figure 2. High-impedance passive probes offer a rugged and inexpensive solution for general-purpose probing and troubleshooting.

The low-impedance resistor-divider probe has either 450 Ω or 950 Ω input resistance to give 10:1 or 20:1 attenuation with the 50 Ω input of the scope. The input resistor is followed by a 50 Ω cable that is terminated in the 50 Ω input of the scope. Remember that the scope must have a 50 Ω input to use this type of probe. The key benefits of this probe include low capacitive loading and very high bandwidth—in the range of a couple of GHz—which helps to make high-accuracy timing measurements. In addition, this is a low-cost probe compared to an active probe in a similar bandwidth range. You would use this probe in applications such as probing electronic circuit logic (ECL) circuits, microwave devices or 50 Ω transmission lines. The one critical trade-off is that this probe has relatively heavy resistive loading, which can affect the measured amplitude of the signal.

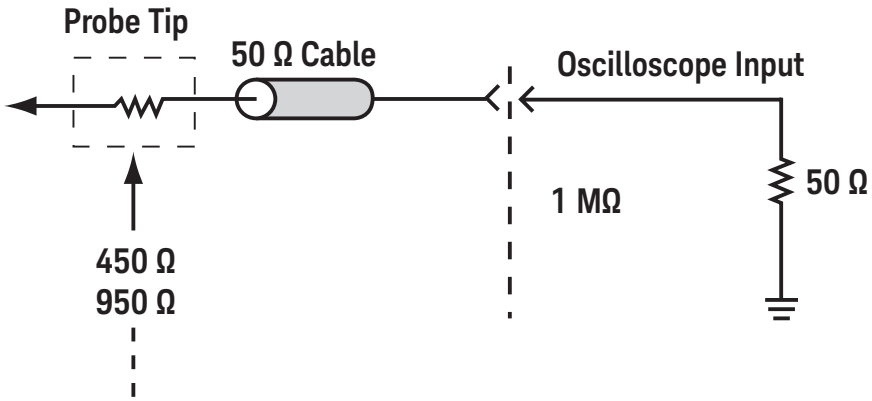

Figure 3. The low-impedance resistor-divider probe features low capacitive loading and wide bandwidth.

Active Probes

If your scope has more than 500 MHz of bandwidth, you are probably using an active probe—or should be. Despite its high price, the active probe is the tool of choice when you need high-bandwidth performance. Active probes typically cost more than passive probes and feature limited input voltage but, because of their significantly lower capacitive loading, they give you more accurate insight into fast signals.



Figure 4. Many modern active probes rely on intelligent probe interfaces that provide power and serve as communication links between compatible probes and the scope.

By definition, active probes require probe power. Many modern active probes rely on intelligent probe interfaces that provide power and serve as communication links between compatible probes and the scope. Typically the probe interface identifies the type of probe attached and sets up the proper input impedance, attenuation ratio, probe power and offset range needed.

Typically you would choose a single-ended active probe for measuring single-ended signals (a voltage referenced to ground) and differential active probes for measuring differential signals (a plus voltage versus a minus voltage). The effective ground plane between the signal connections in differential probes is more ideal than most of the ground connections in single-ended probes. This ground plane effectively connects the probe tip ground to the device-under-test (DUT) ground with very low impedance. Therefore differential probes can make even better measurements on single-ended signals than single-ended probes can. The Keysight Technologies, Inc. InfiniiMax 1130A Series probing system allows either differential or single-ended probing with a single probe amplifier by using interchangeable probe heads that are optimized for hand browsing, plug-on socket connections or solder-in connections.



Figure 5. The InfiniiMax probing system offers a variety of single-ended and differential probe head accessories for a cost-effective single-ended and differential probing solution.

Bandwidth Considerations

Higher bandwidth is a clear advantage of active probes over passive probes. One issue probe users often overlook is the effect of the connection to the target, which is called "connection bandwidth." Even though a particular active probe may have an impressive bandwidth specification, the published specified performance may be given for ideal probing conditions. In a real-world probing situation, which would include using probing accessories to attach to the probe tips, the active probe's performance may be much worse than the published specified performance. The real-world performance of an active probing system is dominated primarily by the "connection" system. Parasitic components to the left of the point labeled VAtn in Figure 5 are the driving factors in determining the performance of a real-world active probing system in high-frequency applications.

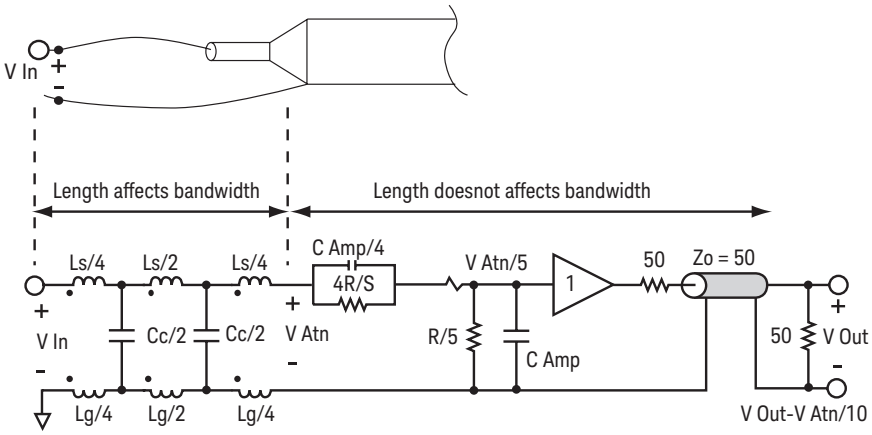

Figure 6. Parasitic components to the left of the point labeled VAtn are the driving factors in determining the performance of a real-world active probing system in high-frequency applications.

As an example, Keysight's N2796A 2 GHz single-ended active probe provides 2 GHz of bandwidth with a probe tip and a 2 cm-long offset ground. With this best-case setup, you get 2 GHz of probe bandwidth. If you take the tip and ground off and replace them with a 10 cm dual-lead adapter, the probe bandwidth drops to 1 GHz. With additional clips attached to the dual-lead adapter, the probe bandwidth is further reduced to 500 MHz. So the key here is that shorter input leads improve probe performance.

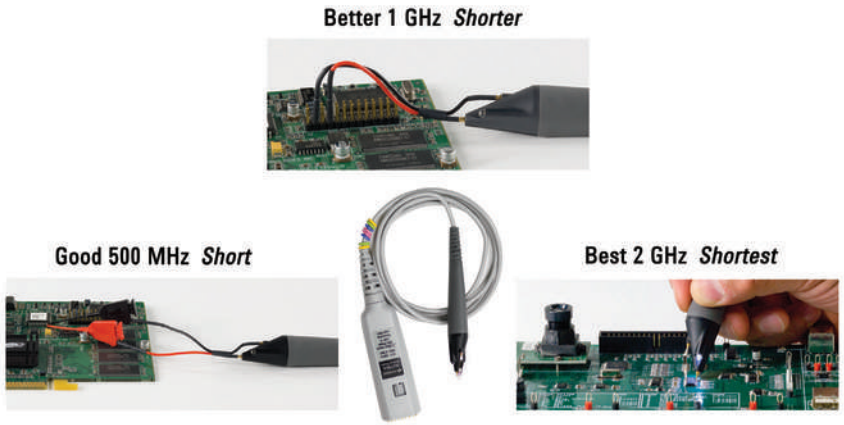

Figure 7. You will achieve higher probe bandwidths with shorter leads.

Probe Loading Effect

Now let's discuss a probe's input impedance and input loading. Many people think that probe input impedance is a constant number. You might hear that the probe has a kΩ, MΩ, or even a 10 MΩ input impedance, but that isn't constant over frequency. Input impedance decreases over frequency

At DC and low frequency ranges, the probe's input impedance starts out at the rated input resistance, say 10 MΩ for a 10:1 passive probe, but as the frequency goes up, the input capacitance of the probe starts to become a short, and the impedance of the probe starts to drop. The higher the input capacitance, the faster the impedance slope drops.

Figure 8 shows a comparison between a 500 MHz passive probe and a 2 GHz active probe. You'll see that at a crossover point of ~10 kHz and beyond, the input impedance of the active probe is higher than that of the passive probe. Higher input impedance means less loading on the target signal, and less loading means less effect on or less disruption of the signal.

At about 70 MHz bandwidth on the chart, the input impedance of the passive probe decreases to ~150 Ω, while the input impedance of the active probe is about 2.5 kΩ. The difference between them is significant. If, for example, you had a system that had 50 Ω or 100 Ω source impedance, the passive probe would have a significantly higher effect on the signal due to probe loading.

In that frequency range, connecting the passive probe is like hanging a 150 Ω resistor on your circuit. If you can tolerate that, this passive probe is going to be fine. If you can't tolerate that, then this probe would be an issue, and you'd be better off choosing a probe with higher impedance at a high frequency range, like an active probe.

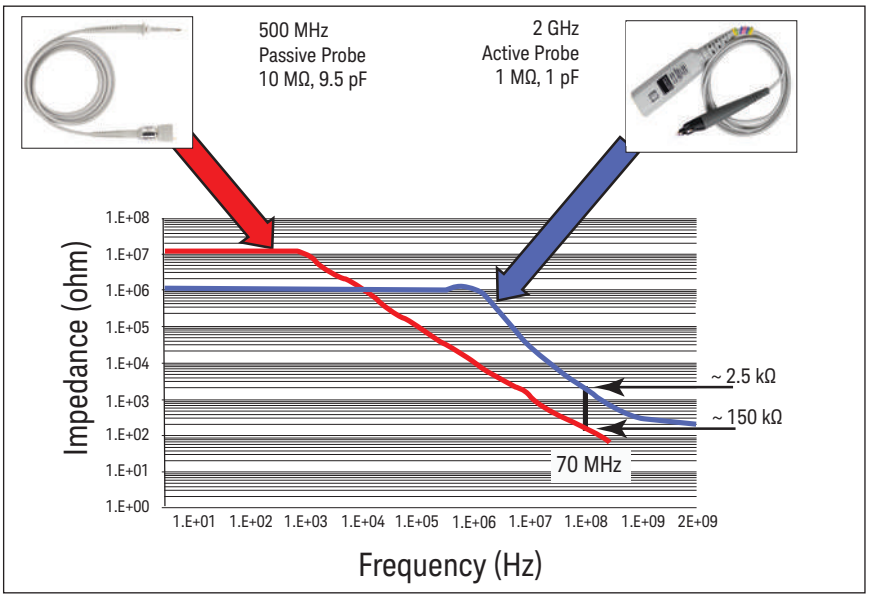

Figure 8. At a crossover point of ~10 kHz and beyond, the input impedance of the active probe is higher than that of the passive probe.

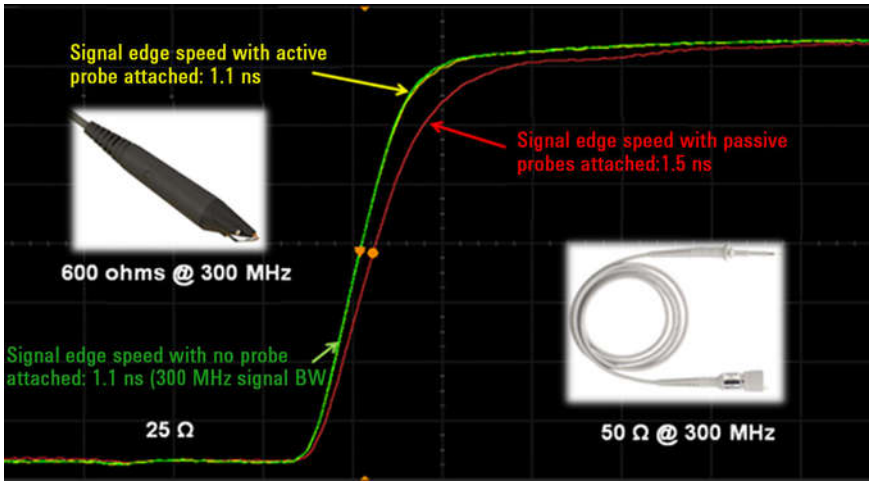

Figure 9. Signal edge speeds measured with a 2 GHz active probe (yellow trace) and a 500 MHz passive probe (red trace).

Figure 9 above is an example of an actual signal measured with two different probes. The green trace shows the 1.1 nsec signal edge speed with no probe attached. That turns out to be a 300 MHz bandwidth in that signal (=0.35/1.1 nsec). With a 2 GHz active probe attached to measure the 1.1 nsec signal, you can't even see the difference between the original signal and the probed signal, as shown by the yellow trace underneath the green trace. Obviously the active probe did not disturb the signal on the target much.

If you take the same signal and attach a 500 MHz passive probe, the edge speed of the signal on the target now measures 1.5 nsec. The passive probe actually disrupted the signal on the target and slowed it down.

Conclusion

When considering the right measurement tools for scope applications, probing is often an afterthought. Many engineers select the scope first based on the bandwidth, sample rate and channel count needed, and then worry about how to get the signal into the scope later. But selecting the right probe for your application and using the probe correctly is the first step toward reliable scope measurements.

A passive probe is a safe choice for general-purpose probing and troubleshooting; but for high-frequency applications, an active probe gives you much more accurate insight into fast signals. Although many active probes on the market have an impressive bandwidth specification, remember that the real-world performance of an active probe is dominated primarily by how you connect the probe to the target. A simple rule of thumb is that a shorter input lead is better if you're looking for high-fidelity measurements.



Keysight Technologies Oscilloscopes

Multiple form factors from 20 MHz to >90 GHz | Industry leading specs | Powerful applications

Evolving Since 1939

Our unique combination of hardware, software, services, and people can help you reach your next breakthrough. We are unlocking the future of technology.
From Hewlett-Packard to Agilent to Keysight.


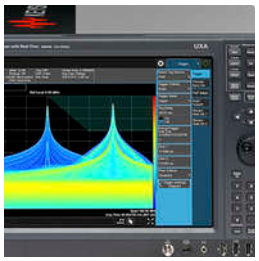


myKeysight

myKeysight
www.keysight.com/find/mykeysight
A personalized view into the information most relevant to you.

http://www.keysight.com/find/emt_product_registration
Register your products to get up-to-date product information and find warranty information.

KEYSIGHT SERVICES
Accelerate Technology Adoption.
Lower costs.

Keysight Services
www.keysight.com/find/service
Keysight Services can help from acquisition to renewal across your instrument's lifecycle. Our comprehensive service offerings—one-stop calibration, repair, asset management, technology refresh, consulting, training and more—helps you improve product quality and lower costs.

CALIBRATION UP TO 10 YEARS WARRANTY
ASSURANCE PLANS

Keysight Assurance Plans
www.keysight.com/find/AssurancePlans
Up to ten years of protection and no budgetary surprises to ensure your instruments are operating to specification, so you can rely on accurate measurements.

Keysight Channel Partners
www.keysight.com/find/channelpartners
Get the best of both worlds: Keysight's measurement expertise and product breadth, combined with channel partner convenience.

www.keysight.com/find/probes

For more information on Keysight Technologies' products, applications or services, please contact your local Keysight office. The complete list is available at:
www.keysight.com/find/contactus

Americas

Canada	(877) 894 4414
Brazil	55 11 3351 7010
Mexico	001 800 254 2440
United States	(800) 829 4444

Asia Pacific

Australia	1 800 629 485
China	800 810 0189
Hong Kong	800 938 693
India	1 800 11 2626
Japan	0120 (421) 345
Korea	080 769 0800
Malaysia	1 800 888 848
Singapore	1 800 375 8100
Taiwan	0800 047 866
Other AP Countries	(65) 6375 8100

Europe & Middle East

Austria	0800 001122
Belgium	0800 58580
Finland	0800 523252
France	0805 980333
Germany	0800 6270999
Ireland	1800 832700
Israel	1 809 343051
Italy	800 599100
Luxembourg	+32 800 58580
Netherlands	0800 0233200
Russia	8800 5009286
Spain	800 000154
Sweden	0200 882255
Switzerland	0800 805353 Opt. 1 (DE) Opt. 2 (FR) Opt. 3 (IT)
United Kingdom	0800 0260637

For other unlisted countries:
www.keysight.com/find/contactus
(BP-9-7-17)

DEKRA Certified
ISO9001 Quality Management System

www.keysight.com/go/quality
Keysight Technologies, Inc.
DEKRA Certified ISO 9001:2015
Quality Management System

KEYSIGHT TECHNOLOGIES

This information is subject to change without notice.
© Keysight Technologies, 2017
Published in USA, December 2, 2017
5990-8576EN
www.keysight.com