

4300 Series Tubeaxial

119x119x32mm

- DC fans with electronically commutated external rotor motor. Fully integrated commutation electronics.
- With electronic protection against reverse polarity, blocking and overloading by PTC-resistor; partially impedance protected.
- Mounting from either face using four 4.3 mm holes.
- Fan of fiberglass reinforced plastic. PBTP housing, PA impeller.
- Air exhaust over struts. Rotational direction CW looking at rotor.
- Electrical connection via leads AWG 22, TR 64. Stripped and tinned ends.
- UL, CSA, VDE approvals on some models, please contact application engineering.

Part Number	CFM @ 0	Curve	Volts	Voltage Range	Power (W)	dBA	Max Ambient Temp C	Wgt. (lbs)	Type Of Bearing	Features
4312GL	56	1	12	6 to 15	1.2	30	75	0.5	Sintec	Leads
4312L	56	1	12	6 to 15	1.2	30	75	0.5	Ball	Leads
4312LS	56	1	12	6 to 15	1.2	30	75	0.5	Ball	Leads
4392L	56	1	12	6 to 15	1.2	30	75	0.5	Ball	Terminals
4312GM	82	2	12	6 to 15	2.6	39	75	0.5	Sintec	Leads
4312M	82	2	12	6 to 15	2.6	39	75	0.5	Ball	Leads
4312MS	82	2	12	6 to 15	2.6	39	75	0.5	Ball	Leads
4392M	82	2	12	6 to 15	2.6	39	75	0.5	Ball	Terminals
4312	100	3	12	6 to 15	5.0	45	75	0.5	Ball	Leads
4312G	100	3	12	6 to 15	5.0	45	75	0.5	Sintec	Leads
4312S	100	3	12	6 to 15	5.0	45	75	0.5	Ball	Leads
4392	100	3	12	6 to 15	5.0	45	75	0.5	Ball	Terminals
4312-143	106	4	12	6 to 15	5.8	47	75	0.5	Ball	Leads
4312-179	120	5	12	6 to 13.2	8.5	51	75	0.5	Ball	Leads
4314L	56	1	24	12 to 28	1.2	30	75	0.5	Ball	Leads

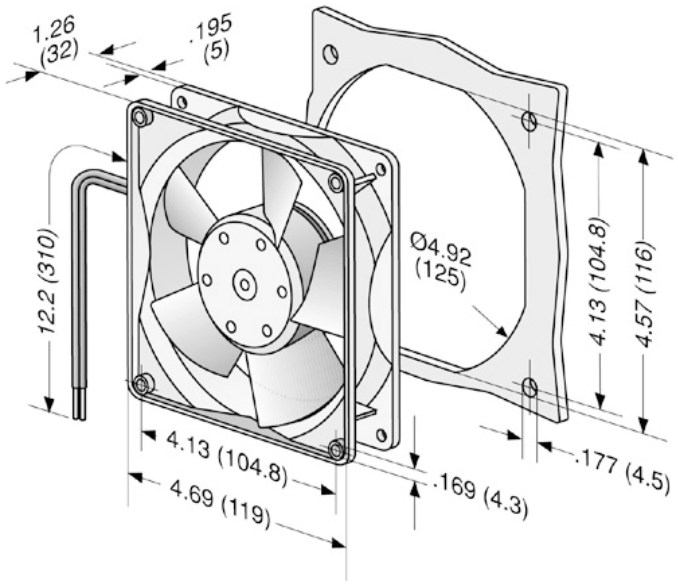

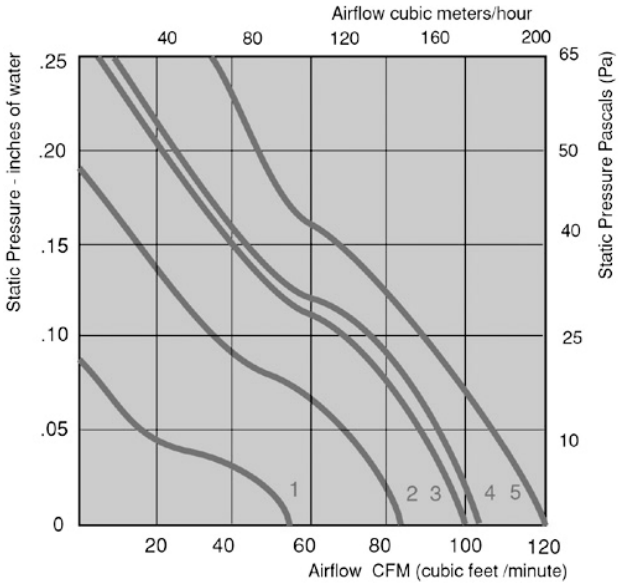

ebm INDUSTRIES, INC.

e-mail: sales@ebm.com · TEL: 860-674-1515 · FAX: 860-674-8536
ebm Industries, Inc., 100 Hyde Road, Farmington, CT 06034 USA
ebm Industries, Inc., 2003 © ebm Industries, Inc. reserves the right to change any specifications or data without notice



4300 Series Tubeaxial

119x119x32mm

- DC fans with electronically commutated external rotor motor. Fully integrated commutation electronics.
- With electronic protection against reverse polarity, blocking and overloading by PTC-resistor; partially impedance protected.
- Mounting from either face using four 4.3 mm holes.
- Fan of fiberglass reinforced plastic. PBTP housing, PA impeller.
- Air exhaust over struts. Rotational direction CW looking at rotor.
- Electrical connection via leads AWG 22, TR 64. Stripped and tinned ends.
- UL, CSA, VDE approvals on some models, please contact application engineering.

Part Number	CFM @ 0	Curve	Volts	Voltage Range	Power (W)	dBA	Max Ambient Temp C	Wgt. (lbs)	Type Of Bearing	Features
4314LS	56	1	24	12 to 28	1.2	30	75	0.5	Ball	Leads
4394L	56	1	24	12 to 28	1.2	30	75	0.5	Ball	Terminals
4314M	82	2	24	12 to 28	2.6	39	75	0.5	Ball	Leads
4394M	82	2	24	12 to 28	2.6	39	75	0.5	Ball	Terminals
4314	100	3	24	12 to 28	5.0	45	75	0.5	Ball	Leads
4314/12	100	3	24	12 to 28	5.0	45	75	0.5	Ball	Leads
4314G	100	3	24	12 to 28	5.0	45	75	0.5	Sintec	Leads
4314S	100	3	24	12 to 28	5.0	45	75	0.5	Ball	Leads
4374	100	3	24	12 to 28	5.0	45	75	0.5	Ball	Terminals
4394	100	3	24	12 to 28	5.0	45	75	0.5	Ball	Terminals
4314-147	106	4	24	12 to 28	5.8	47	75	0.5	Ball	Leads
4314-180	120	5	24	12 to 26.5	9.5	51	75	0.5	Ball	Leads
4318	100	3	48	36 to 53	5.0	45	75	0.5	Ball	Leads
4318/2	100	3	48	36 to 53	5.0	45	75	0.5	Ball	Leads
4398	100	3	48	36 to 53	5.0	45	75	0.5	Ball	Terminals

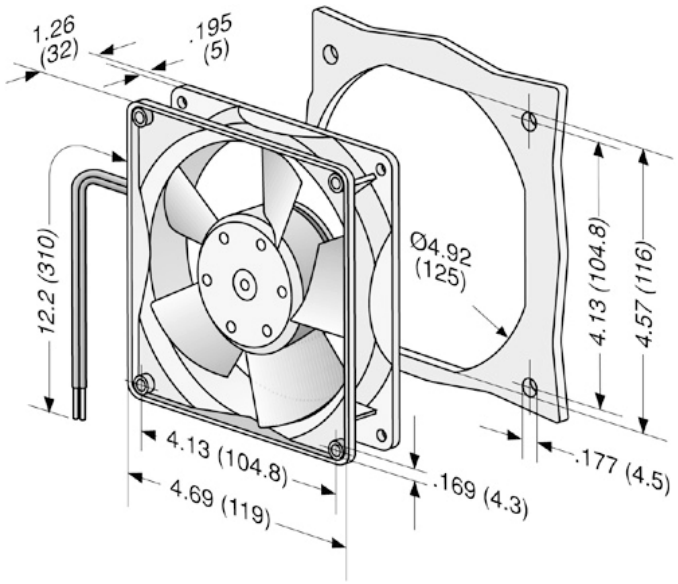

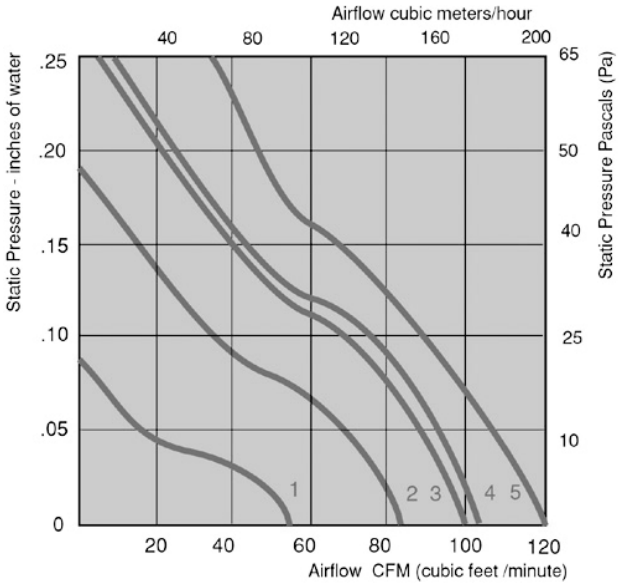

ebm INDUSTRIES, INC.

e-mail: sales@ebm.com · TEL: 860-674-1515 · FAX: 860-674-8536
ebm Industries, Inc., 100 Hyde Road, Farmington, CT 06034 USA
ebm Industries, Inc., 2003 © ebm Industries, Inc. reserves the right to change any specifications or data without notice