# EVC843

## Y connection cable

YSDGH050MSS0002H05STGH040MSS

Please see the technical note under "Downloads"

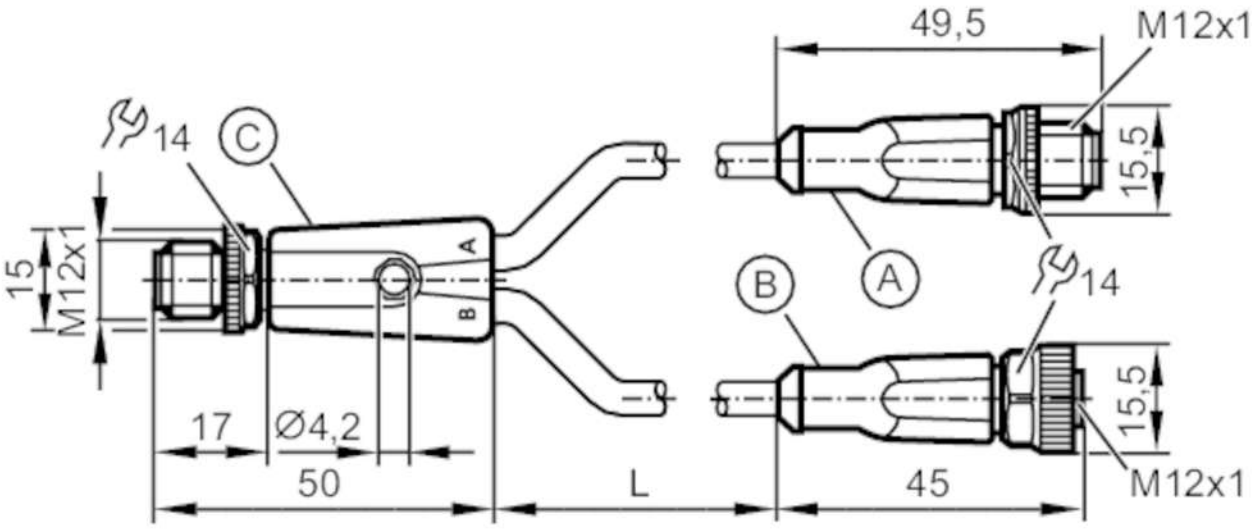


| | | | |
|---|---|---|---|
| **Application** | | | |
| Special feature | | | Free from silicone; Halogen-free; Gold-plated contacts; Drag chain suitability |
| Free from silicone | | | yes |
| **Electrical data** | | | |
| Operating voltage | [V] | | 24 DC |
| Protection class | | | III |
| Max. current load total | [A] | | 3 |
| **Operating conditions** | | | |
| Ambient temperature | [°C] | | -25...90 |
| Protection | | | IP 65; IP 67; IP 68; IP 69K |
| **Mechanical data** | | | |
| Weight | [g] | | 183.1 |
| Moulded-body material | | | TPU / TPU |
| Material nut | | | brass, nickel-plated |
| Sealing material | | | Viton |
| Drag chain suitability | | | yes |
| Drag chain suitability | | bending radius for flexible use | min. 10 x cable diameter |
| | | travel speed | max. 3.3 m/s for a horizontal travel length of 5 m and max. acceleration of 5 m/s² |
| | | bending cycles | > 5 Mio. |
| | | torsional strain | ± 180 °/m |

# EVC843

## Y connection cable

YSDGH050MSS0002H05STGH040MSS

| Remarks | |
|---|---|
| Notes | Please see the technical note under "Downloads" |
| Pack quantity | 1 pcs. |

## Electrical connection - plug C

Connector:  M12, straight; coding: A; Moulded body: TPU, black; Locking: Lock nut, brass, nickel-plated; Contacts: gold-plated; Tightening torque: 0.6...1.5 Nm; Take into account the maximum value of the counterpart!




## Electrical connection

Cable: 2 m, PUR, Halogen-free, black, Ø 4.9 mm; 5 x 0.34 mm² (42 x Ø 0.1 mm ) + 5 x 0.34 mm² (42 x Ø 0.1 mm )

### Connection

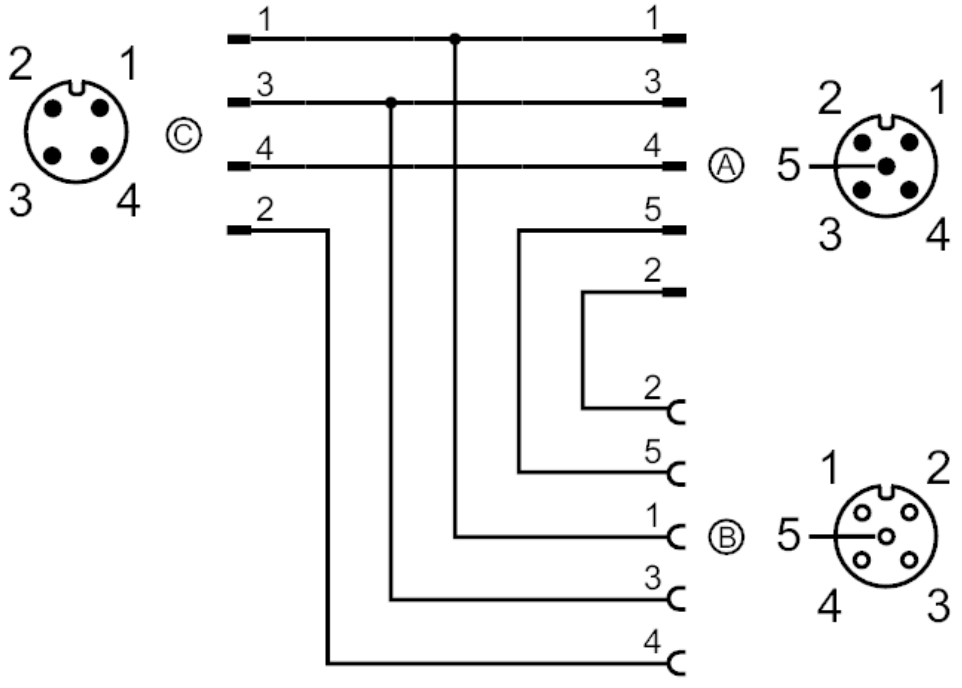

# EVC843

## Y connection cable

YSDGH050MSS0002H05STGH040MSS

### Electrical connection - plug A

Connector:  M12, straight; coding: A; Moulded body:  TPU, black; Locking: Lock nut, brass, nickel-plated; Contacts: gold-plated; Tightening torque: 0.6...1.5 Nm; Take into account the maximum value of the counterpart!

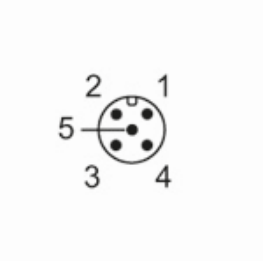


### Electrical connection - socket B

Connector:  M12, straight; coding: A; Moulded body:  TPU, black; Locking: Lock nut, brass, nickel-plated; Sealing: Viton; Contacts: gold-plated; Tightening torque: 0.6...1.5 Nm; Take into account the maximum value of the counterpart!

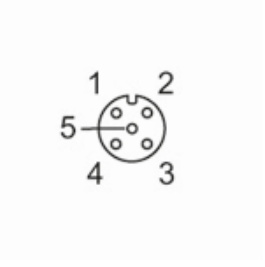


### Diagrams and graphs

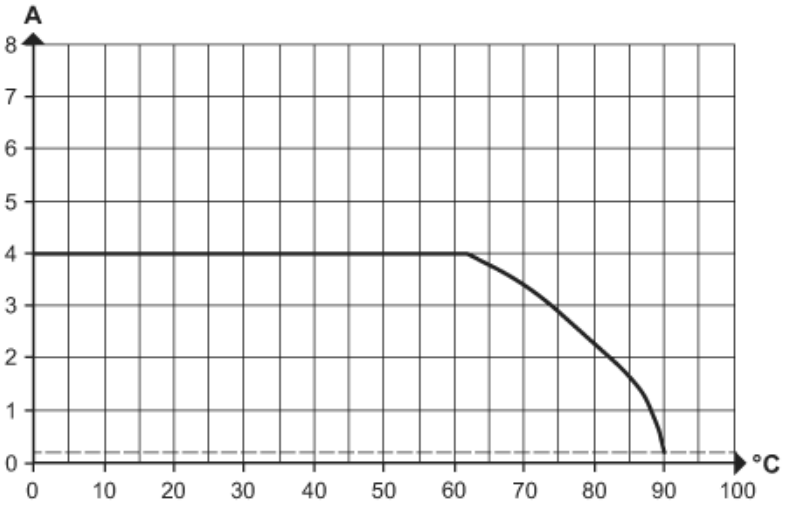


Derating Imax * 0.8 DIN EN 60512-5-2

X Ambient temperature [°C]

Y Current [A]