Instruction Leaflet

3½ Digit LCD DPM

DPM RS **stock no. 255-985**

- Ultra-low profile
- Ultra-low profile
- Snap in Bezel

The meter uses advanced components and construction techniques to provide a uniquely compact unit of high performance, elegant appearance and low cost. The meter is in a 40 pin DIL integrated circuit format which can be plugged directly into a DIL socket or panel mounted using snap-in bezel provided. It is pin compatible with the popular 7106, 26 and 36 range of A/D Converters and as a single component can be used to directly replace LCD, A/D and numerous passive components in existing applications. The low profile snap-in bezel incorporates a flat reverse printed window giving a superb appearance that cannot be damaged or rubbed off by contact.

The meter features Auto-Zero, Auto Polarity, 200mV FSD, 12.5mm (0.5") digit height and programmable decimal points. There are many useful engineering symbols and outputs for use in auto ranging. All relevant connections are brought out to the pins allowing operation in all modes available for the 71X6 range including single ended ratio metric and differential measurements. On card solder pads for essential inter-connections make selection of operating mode quick and easy with the minimum of external wiring. Very low current consumption allows long battery life making especially useful in portable equipment.

Specification	Min.	Typ.	Max.	Unit
Accuracy (± 1 count)		0.05	0.1	%
Linearity			± 1	Count
Sample rate		3		per sec
Temp stability		1000		ppm/˚C
Temp range	0		50	˚C
Supply voltage (V+ - V-)	7.5	9	15	V
Supply current		150		µA
Max d.c. input voltage			± 20	V
Input leakage current (Vin = 0V)		1	10	pA
Low battery threshold		7.25		V

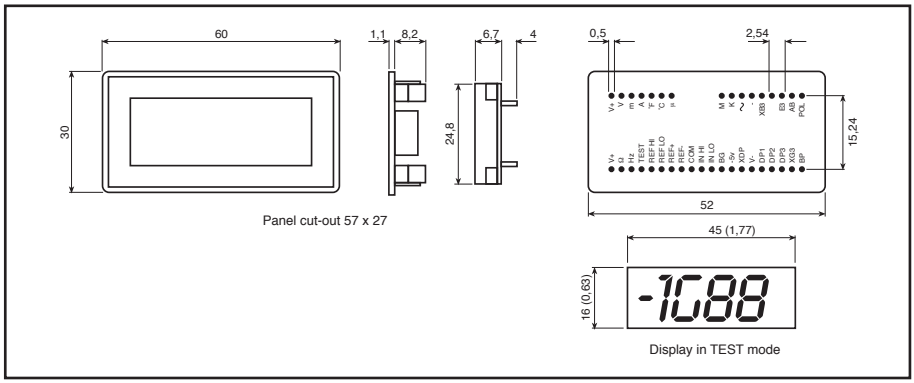

PIN Functions

1,40 Positive power supply.

2-7, 12-14, 17, 38, 39: ANNUNCIATORS, SPECIAL NOTE:
The DPM Annunciators (DP's ˚C etc.) can be illuminated by connecting to XDP (Pin 27). However, as these annunciators are normally floating under certain conditions they may appear when not wanted. If this occurs they can be suppressed either by connection to Back Plane (Pin 21) directly if not needed or via a 1M resistor if required at certain times. The 1m resistor does not effect normal operation and the annunciator will still appear when connected to XDP. ensure that annunciators are not directly connected to XDP and BP at the same time.

15. " - ": Input for the polarity annunciator. Internally linked to POL (Pin 20). If this is to be externally controlled cut Link 11.
16, 18,19, 22. XB3, E3, AB, XG3: Outputs for use in autoranging applications.
20. POL: Drive for " - " Annunciator. Internally connected via Link 11.
21. BP: LCD Back Plane drive waveform.
23. DP3: 1.999
24. DP2: 19.99 See special note: Annunciators.
25. DP1: 199.9
26. V-: Negative Power supply.
27. XDP: Connect to required annunciators/DP's (see note).
28. No connection.
29. BG: Input for bandgap reference (1.22V nom).
30. IN LO: Negative measuring input.
31. IN HI: Positive measuring input.
32. COM: The ground for the analogue section of the converter held actively at 2.8V (nom) below V+. COM must not be allowed to sink excessive current (>100µA) by connecting it directly to a higher voltage.
33. REF - : Negative output from internal reference.
34. REF + : Positive output from internal reference.
35. REF LO: Negative input for reference voltage.
36. REF HI: Positive input for reference voltage.
37. TEST: Connecting to this pin to V+ turns on the segments as illustrated. It should not be operated for more than a few seconds as the d.c. voltage applied to the LCD may "burn" the display.
This pin is nominally at 5V below V+ and is the ground for the digital section of the meter, it can be used as a negative supply to power external logic up to a maximum of 1mA.

Circuit Diagram

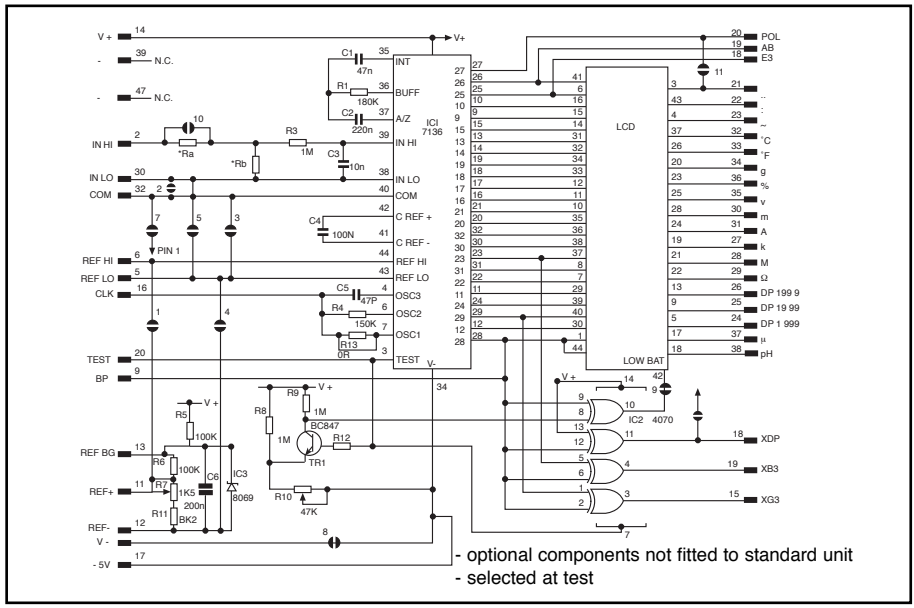

Differential inputs

IN, HI, IN LO, REF HI and REF LO are true differential inputs. They respond to the voltage across them and not their voltage with respect to the power supply. There is a limit to this response known as the common mode range. Any input must be no higher than V+, -0.5V and no lower than V-, +1.0V. If the power supply is floating with respect to the circuit being monitored connect IN LO and REF LO to common.

If there is a danger that any input may be taken beyond the power supply rails a series resistor must be fitted to limit the input current to less than 100µA.

Component Layout

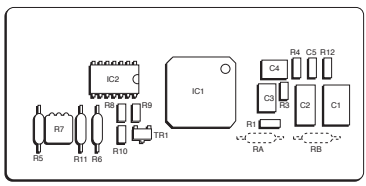

Applications

Input Scaling: Two resistors, RA and RB, may be fitted in order to alter the full scale reading of the meter. See table.

Panel fitting

Fit the bezel to the front of the panel and then locate the meter to the bezel from behind. Alternatively the meter and the bezel may be assembled before fitting into the front of the panel but care must be taken not to use excessive force.

Notes

1. Input must not exceed ± 500V
2. Ensure link across La is cut. Meter will need re-calibration.

Required F.S.D.		Ra	Rb
2V	2	910K	100K
20V	2	1M	10K
200V	2	1M	1K
2000V	1,2	1M	100R
200µA		LINK	1K
2mA		LINK	100R
20mA		LINK	10R
200mA		LINK	1R

8753

Circuit interconnections

The meter can be configured for any of the applications shown below. Interconnections can be made by one of two methods. 1: Via the user's conditioning PCB, terminating at the pins; or 2: Bridging the solder across the appropriate solder pad links provided (see circuit diagram).

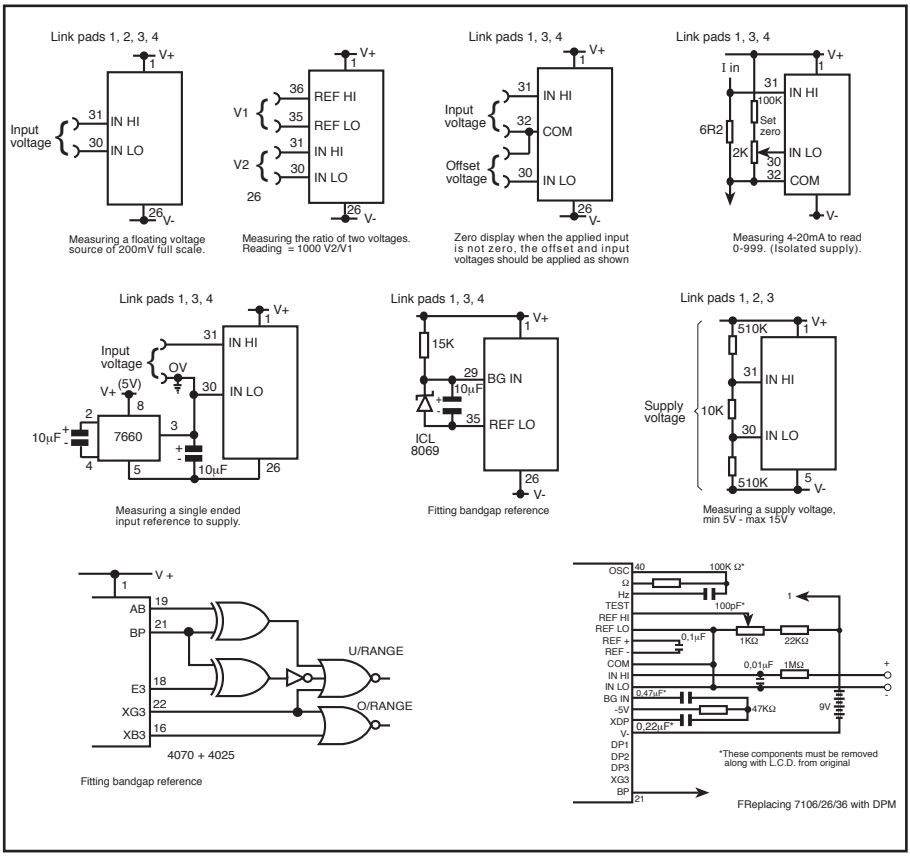

The information provided in RS technical literature is believed to be accurate and reliable; however, RS Components assumes no responsibility for inaccuracies or omissions, or for the use of this information, and all use of such information shall be entirely at the user's own risk.
No responsibility is assumed by RS Components for any infringements of patents or other rights of third parties which may result from its use.
Specifications shown in RS Components technical literature are subject to change without notice.

© RS Components 1997