Hardware Version V1.2

HARDWARE MANUAL

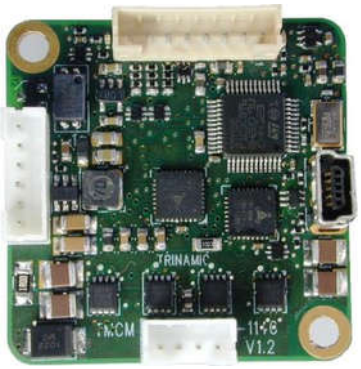

TMCM-1140

1-Axis Stepper
Controller / Driver
2 A / 24 V
sensOstep™ Encoder
USB, RS485, and CAN

UNIQUE FEATURES:

coolStep™

stallGuard2™

TRINAMIC Motion Control GmbH & Co. KG
Hamburg, Germany

www.trinamic.com

TRINAMIC
MOTION CONTROL

Table of Contents

1 Features ... 3
2 Order Codes ... 5
3 Mechanical and Electrical Interfacing ... 6
3.1 Dimensions and Mounting Holes ... 6
3.2 Connectors of TMCM-1140 ... 7
3.2.1 Power and Communication Connector ... 8
3.2.1.1 Power Supply ... 8
3.2.1.2 RS485 ... 9
3.2.1.3 CAN ... 10
3.2.2 Multipurpose I/O Connector ... 11
3.2.2.1 Digital Inputs IN_0, IN_1, IN_2 ... 12
3.2.2.2 Analog Input AIN_0 ... 13
3.2.2.3 Outputs OUT_0, OUT_1 ... 13
3.2.3 Motor Connector ... 15
3.2.4 Mini-USB Connector ... 16
4 Reset to Factory Defaults ... 17
5 On-Board LEDs ... 18
6 Operational Ratings ... 19
7 Functional Description ... 20
8 TMCM-1140 Operational Description ... 21
8.1 Calculation: Velocity and Acceleration vs. Microstep and Fullstep Frequency ... 21
9 Life Support Policy ... 23
10 Revision History ... 24
10.1 Document Revision ... 24
10.2 Hardware Revision ... 24
11 References ... 24

1 Features

The TMCM-1140 is a single axis controller/driver module for 2-phase bipolar stepper motors with state of the art feature set. It is highly integrated, offers a convenient handling and can be used in many decentralized applications. The module can be mounted on the back of NEMA 17 (42mm flange size) stepper motors and has been designed for coil currents up to 2 A RMS and 24 V DC supply voltage. With its high energy efficiency from TRINAMIC's coolStep™ technology cost for power consumption is kept down. The TMCL™ firmware allows for both, standalone operation and direct mode.

MAIN CHARACTERISTICS

Motion controller
- Motion profile calculation in real-time
- On the fly alteration of motor parameters (e.g. position, velocity, acceleration)
- High performance microcontroller for overall system control and serial communication protocol handling

Bipolar stepper motor driver
- Up to 256 microsteps per full step
- High-efficient operation, low power dissipation
- Dynamic current control
- Integrated protection
- stallGuard2 feature for stall detection
- coolStep feature for reduced power consumption and heat dissipation

Encoder
- sensOstep magnetic encoder (1024 increments per rotation) e.g. for step-loss detection under all operating conditions and positioning supervision

Interfaces
- RS485 2-wire communication interface
- CAN 2.0B communication interface
- USB full speed (12Mbit/s) device interface
- 4 multipurpose inputs:
  - 3x general-purpose digital inputs
    (Alternate functions: STOP_L / STOP_R / HOME switch inputs or A/B/N encoder input)
  - 1x dedicated analog input
- 2 general purpose outputs
  - 1x open-drain 1A max.
  - 1x +5V supply output (can be switched on/off in software)

Software
- TMCL: standalone operation or remote controlled operation,
  program memory (non volatile) for up to 2048 TMCL commands, and
  PC-based application development software TMCL-IDE available for free.

Electrical and mechanical data
- Supply voltage: +24 V DC nominal (9... 28 V DC)
- Motor current: up to 2 A RMS / 2.8 A peak (programmable)

Refer to separate TMCL Firmware Manual, too.

TRINAMICs Unique Features – Easy to Use with TMCL

stallGuard2™ stallGuard2 is a high-precision sensorless load measurement using the back EMF on the coils. It can be used for stall detection as well as other uses at loads below those which stall the motor. The stallGuard2 measurement value changes linearly over a wide range of load, velocity, and current settings. At maximum motor load, the value goes to zero or near to zero. This is the most energy-efficient point of operation for the motor.

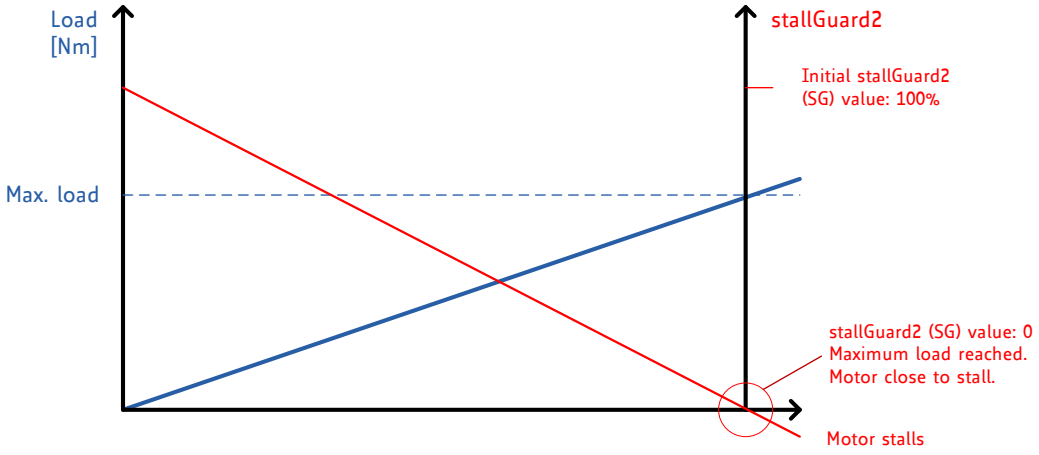

Figure 1.1 stallGuard2 load measurement SG as a function of load

coolStep™ coolStep is a load-adaptive automatic current scaling based on the load measurement via stallGuard2 adapting the required current to the load. Energy consumption can be reduced by as much as 75%. coolStep allows substantial energy savings, especially for motors which see varying loads or operate at a high duty cycle. Because a stepper motor application needs to work with a torque reserve of 30% to 50%, even a constant-load application allows significant energy savings because coolStep automatically enables torque reserve when required. Reducing power consumption keeps the system cooler, increases motor life, and allows reducing cost.

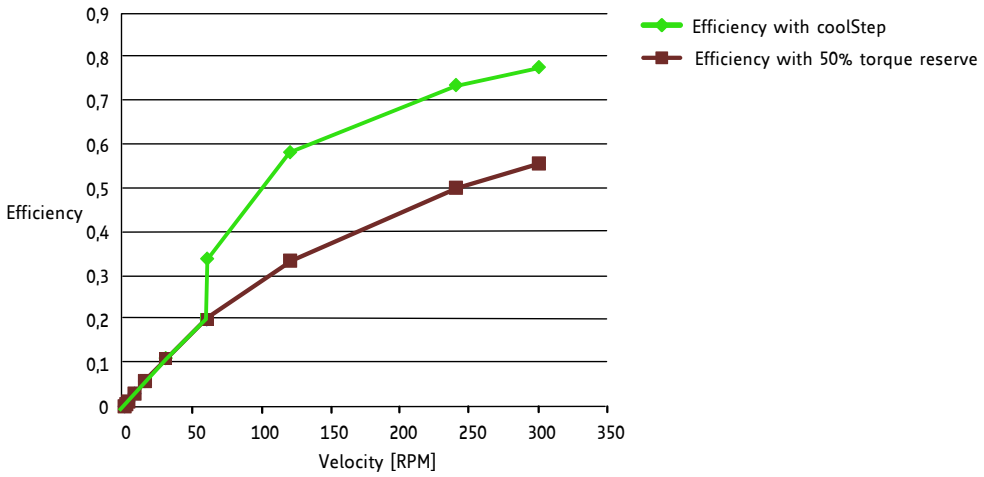

Figure 1.2 Energy efficiency example with coolStep

2 Order Codes

Order code	Description	Size (mm³)
TMCM-1140-*option*	Single axis bipolar stepper motor controller / driver electronics with integrated sensOstep encoder and coolStep feature	37 x 37 x 11.5

Table 2.1 Order codes

The following options are available:

Firmware option	Description	Order code example:
-TMCL	Module pre-programmed with TMCL firmware	TMCM-1140-*TMCL*

Table 2.2 Firmware options

A cable loom set is available for this module:

Order code	Description
TMCM-1140-CABLE	Cable loom for TMCM-1140: - 1x cable for power and communication connector (length 200mm) - 1x cable for multipurpose In/Out connector (length 200mm) - 1x cable for motor connector (length 200mm) - 1x USB type A connector to mini-USB type B connector cable (length 1.5m)

Table 2.2 Cable loom order codes

Please note that the TMCM-1140 is available with NEMA17 stepper motors, too. Refer to the PD-1140 documents for more information about these products.

3 Mechanical and Electrical Interfacing

3.1 Dimensions and Mounting Holes

The dimensions of the controller/driver board are approx. 37 mm x 37 mm x 11.5 mm in order to fit on the back of a 42 mm stepper motor. Maximum component height (height above PCB level) without mating connectors is around 8mm above PCB level and 2 mm below PCB level. There are two mounting holes for M3 screws for mounting to a NEMA17 stepper motor.

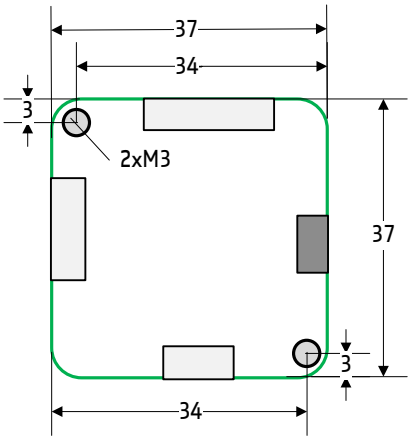

Figure 3.1 Dimensions of TMCM-1140 and position of mounting holes

3.2 Connectors of TMCM-1140

The controller/driver board of the TMCM-1140 offers four connectors including the motor connector which is used for attaching the motor coils to the electronics. The power and communication connector is used for power supply, CAN interface, and RS485 interface. The 8pin multipurpose I/O connector offers four multipurpose inputs and two general purpose outputs. Further, there is a connector for the USB interface.

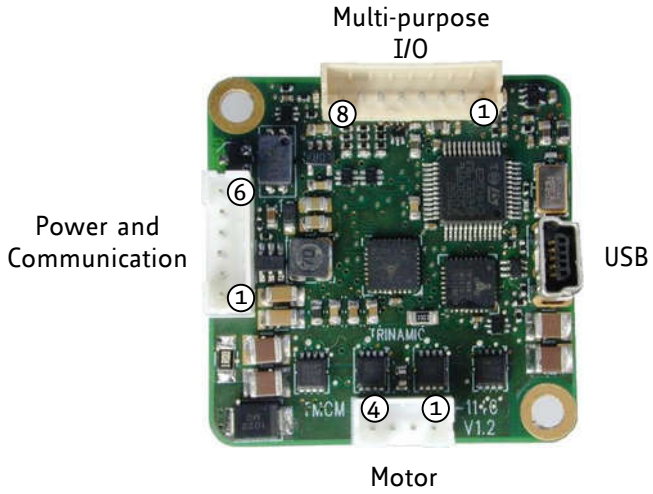

Figure 3.2 Overview connectors

Label	Connector type	Mating connector type
Power and Communication Connector	JST B6B-PH-K-S (JST PH series, 6pins, 2mm pitch)	Connector housing: JST PHR-6 Contacts: JST SPH-002T-P0.5S Wire: 0.22mm², AWG 24
Multipurpose I/O Connector	JST B8B-PH-K-S (JST PH series, 8pins, 2mm pitch)	Connector housing: JST PHR-8 Contacts: JST SPH-002T-P0.5S Wire: 0.22mm², AWG 24
Motor Connector	JST B4B-PH-K-S (JST PH series, 4pins, 2mm pitch)	Connector housing: JST PHR-4 Contacts: JST SPH-002T-P0.5S Wire: 0.22mm², AWG 24
Mini-USB Connector	Molex 500075-1517 Mini USB Type B vertical receptacle	Any standard mini-USB plug

Figure 3.3 Connectors and mating connectors, contacts and applicable wire

3.2.1 Power and Communication Connector

A 6pin JST PH-series 2mm pitch single row connector is used for power supply, RS485 and CAN serial communication. Please mention the additional power supply information in chapter 3.2.1.1.

Note: CAN interface will be de-activated in case USB is connected due to internal sharing of hardware resources.



Pin	Label	Direction	Description
1	GND	Power (GND)	System and signal ground
2	VDD	Power (Supply)	VDD (+9V...+28V)
3	RS485+	Bidirectional	RS485 interface, diff. signal (non-inverting)
4	RS485-	Bidirectional	RS485 interface, diff. signal (inverting)
5	CAN_H	Bidirectional	CAN interface, diff. signal (non-inverting)
6	CAN_L	Bidirectional	CAN interface, diff. signal (inverting)

Table 3.1 Connector for power supply and interfaces

3.2.1.1 Power Supply

For proper operation care has to be taken with regard to power supply concept and design. Due to space restrictions the TMCM-1140 includes about 40µF/35V of supply filter capacitors. These are ceramic capacitors which have been selected for high reliability and long life time. The module includes a 28V suppressor diode for over-voltage protection. There is no reverse polarity protection. The module will short any reversed supply voltage due to the suppressor diode (uni-directional version) and the internal diodes of the driver transistors.

It is important that the power supply voltage is kept below the upper limit of 28V (please see also chapter 6, operating values). Otherwise the driver electronics might be seriously damaged! Especially, when the selected operating voltage is near the upper limit a regulated power supply is highly recommended.

It is recommended to connect an electrolytic capacitor of significant size (e.g. 470µF/35V) to the power supply lines next to the TMCM-1140!

In addition to power stabilization (buffer) and filtering this added capacitor will also reduce any voltage spikes which might otherwise occur from a combination of high inductance power supply wires and the ceramic capacitors. In addition it will limit slew-rate of power supply voltage at the module. The low ESR of ceramic-only filter capacitors may cause stability problems with some switching power supplies.

3.2.1.2 RS485

For remote control and communication with a host system the TMCM-1140 provides a two wire RS485 bus interface. For proper operation the following items should be taken into account when setting up an RS485 network:

1. *BUS STRUCTURE*:
   The network topology should follow a bus structure as closely as possible. That is, the connection between each node and the bus itself should be as short as possible. Basically, it should be short compared to the length of the bus.

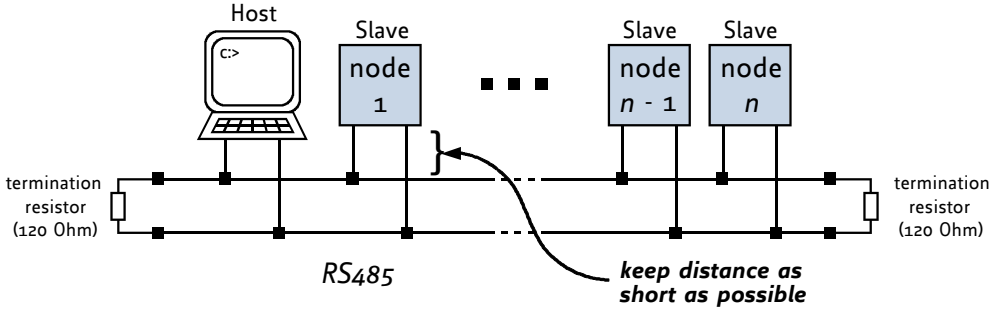

Figure 3.4 Bus structure

2. *BUS TERMINATION*:
   Especially for longer busses and/or multiple nodes connected to the bus and/or high communication speeds, the bus should be properly terminated at both ends. The TMCM-1140 does not integrate any termination resistor. Therefore, 120 Ohm termination resistors at both ends of the bus have to be added externally.

3. *NUMBER OF NODES*:
   The RS485 electrical interface standard (EIA-485) allows up to 32 nodes to be connected to a single bus. The bus transceiver used on the TMCM-1140 units (SN65HVD3082ED) has just 1/8th of the standard bus load and allows a maximum of 256 units to be connected to a single RS485 bus.

4. *NO FLOATING BUS LINES:*
   Avoid floating bus lines while neither the host/master nor one of the slaves along the bus line is transmitting data (all bus nodes switched to receive mode). Floating bus lines may lead to communication errors. In order to ensure valid signals on the bus it is recommended to use a resistor network connecting both bus lines to well defined logic levels. In contrast to the termination resistors this network is normally required just once per bus. Certain RS485 interface converters available for PCs already include these additional resistors (e.g. USB-2-485).

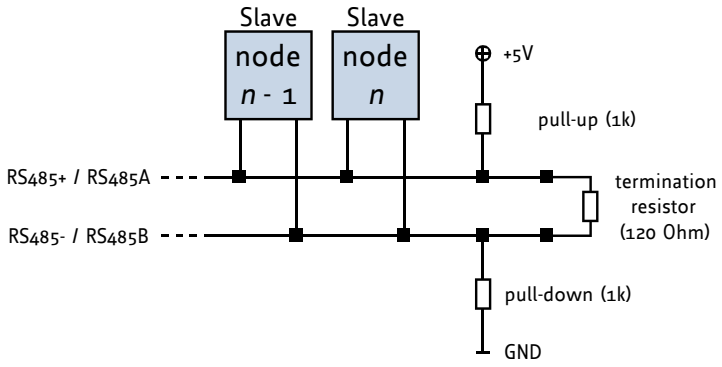

Figure 3.5 Bus lines with resistor network

3.2.1.3 CAN

For remote control and communication with a host system the TMCM-1140 provides a CAN bus interface. Please note that the CAN interface is not available in case USB is connected. For proper operation the following items should be taken into account when setting up a CAN network:

1. *BUS STRUCTURE*:
   The network topology should follow a bus structure as closely as possible. That is, the connection between each node and the bus itself should be as short as possible. Basically, it should be short compared to the length of the bus.

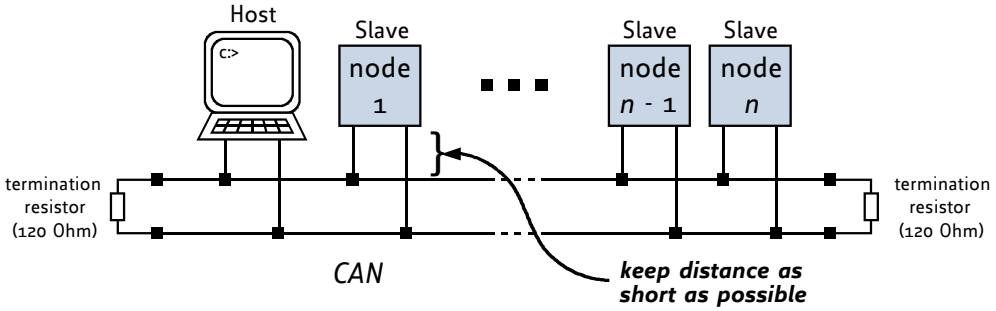

Figure 3.6: CAN bus structure

2. *BUS TERMINATION*:
   Especially for longer busses and/or multiple nodes connected to the bus and/or high communication speeds, the bus should be properly terminated at both ends. The TMCM-1140 does not integrate any termination resistor. Therefore, 120 Ohm termination resistors at both ends of the bus have to be added externally.

3. *NUMBER OF NODES*:
   The bus transceiver used on the TMCM-1140 units (TJA1050T) supports at least 110 nodes under optimum conditions. Practically achievable number of nodes per CAN bus highly depends on bus length (longer bus -> less nodes) and communication speed (higher speed -> less nodes).

3.2.2 Multipurpose I/O Connector

An 8pin JST PH-series 2mm pitch single row connector is available for all multipurpose inputs and outputs.



Pin	Label	Direction	Description
1	GND	Power (GND)	System and signal ground
2	VDD	Power (Supply)	VDD, connected to VDD pin of the power and communication connector
3	OUT_1	Output	Open-drain output (max. 1A) Integrated freewheeling diode to VDD
4	OUT_0	Output	+5V supply output (max. 100mA) Can be switched on/off in software
5	AIN_0	Input	Dedicated analog input, Input voltage range: 0..+10V Resolution: 12bit (0..4095)
6	IN_0, STOP_L, ENC_A	Input	General purpose digital input (+24V compatible)
			Alternate function 1: left stop switch input
			Alternate function 2: external incremental encoder channel A input
7	IN_1, STOP_R, ENC_B	Input	General purpose digital input (+24V compatible)
			Alternate function 1: right stop switch input
			Alternate function 2: external incremental encoder channel B input
8	IN_2, HOME, ENC_N	Input	General purpose digital input (+24V compatible)
			Alternate function 1: home switch input
			Alternate function 2: external incremental encoder index / zero channel input

Table 3.4 Multipurpose I/O connector

Note:

- All inputs have resistor based voltage input dividers with protection diodes. These resistors also ensure a valid GND level when left unconnected.
- For all digital inputs (IN_0, IN_1, IN_2) a 2k2 pull-up resistor to +5V can be activated. Then these inputs have a default (unconnected) logic level of 1 and an external switch to GND can be connected. This might be especially interesting in case these inputs are used as STOP_L / STOP_R and HOME switch inputs (alternate function 1) or as encoder input for an external incremental A/B/N encoder with open-collector outputs (pull-ups are not necessary for encoder with push-pull outputs).

3.2.2.1 Digital Inputs IN_0, IN_1, IN_2

The eight pin connector of the TMCM-1140 provides three multipurpose digital inputs IN_0, IN_1 and IN_2.

All three inputs accept up to +24V input signals. They are protected against these higher voltages using voltage resistor dividers together with limiting diodes against voltages below 0V (GND) and above +3.3V DC (see figure below).

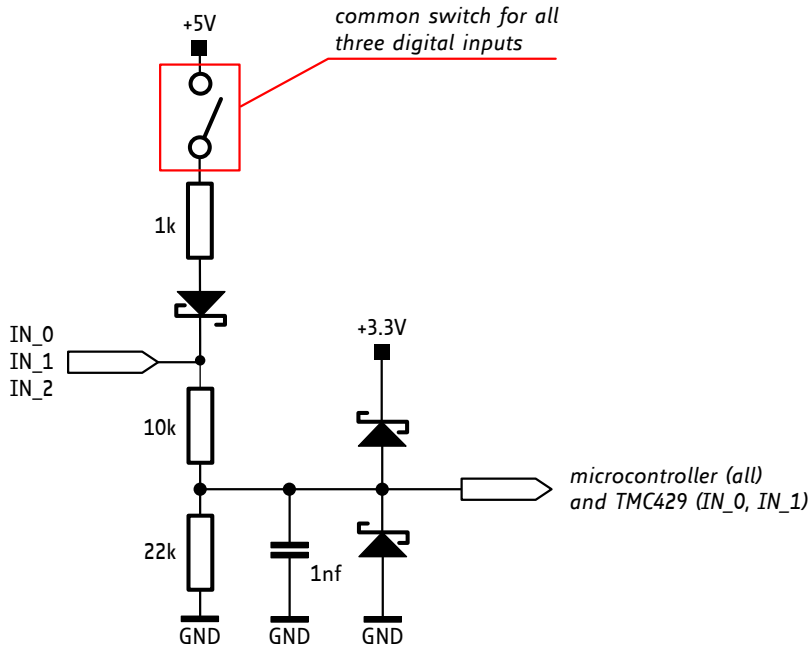

Figure 3.7 General purpose inputs (simplified input circuit)

Refer to the TMCM-1140 TMCL Firmware Manual (SIO command) for further information about switching the pull-up resistors for all digital inputs on / off.

The three digital inputs have alternate functionality depending on configuration in software. The following functions are available:

Label (pin)	Default function	Alternate function 1	Alternate function 2
IN_0 (6)	General purpose digital input	STOP_L - left stop switch input, connected to processor and TMC429 REF input (supporting left stop functionality in hardware)	ENC_A - external incremental encoder input channel A, connected to processor encoder counter input
IN_1 (7)	General purpose digital input	STOP_R - right stop switch input, connected to processor and TMC429 REF input (supporting right stop switch functionality in hardware)	ENC_B - external incremental encoder input channel B, connected to processor encoder counter input
IN_2 (8)	General purpose digital input	HOME - home switch input, connected to processor	ENC_N - external incremental encoder input index / zero channel, connected to processor interrupt input

Table 3.7 Multipurpose inputs / alternate functions

All three digital inputs are connected to the on-board processor and can be used as general purpose digital inputs (default).

3.2.2.2 Analog Input AIN_0

The eight pin connector of the TMCM-1140 provides one dedicated analog input AIN_0.

This dedicated analog input offers a full scale input range of 0... +10 V with a resolution of the internal analog-to-digital converter of the microcontroller of 12bit (0... 4095).

The input is protected against higher voltages up to +24 V using voltage resistor dividers together with limiting diodes against voltages below 0 V (GND) and above +3.3 V DC (see figure below).

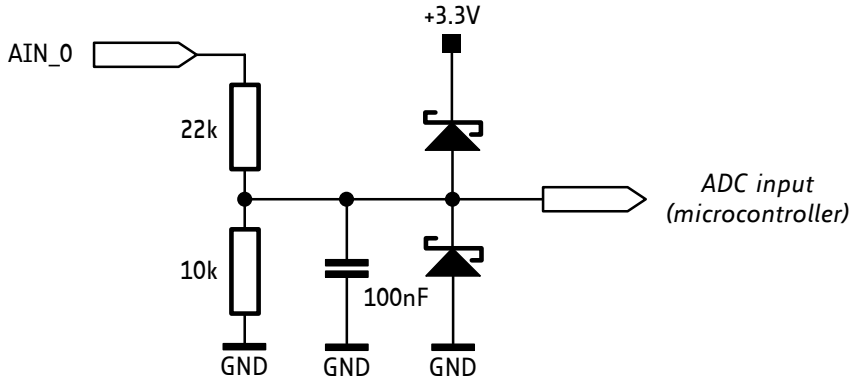

Figure 3.8 General purpose inputs (simplified input circuit)

3.2.2.3 Outputs OUT_0, OUT_1

The eight pin connector of the TMCM-1140 offers two general purpose outputs OUT_0 and OUT_1. OUT_1 is an open-drain output capable of switching up to 1A. The output of the N-channel MOSFET transistors is connected to a freewheeling diode for protection against voltage spikes especially from inductive loads (relais etc.) above supply voltage (see figure below).

In case free-wheeling diodes are connected to VDD supply voltage: None of the two outputs should be connected to any voltage above supply voltage of the module.

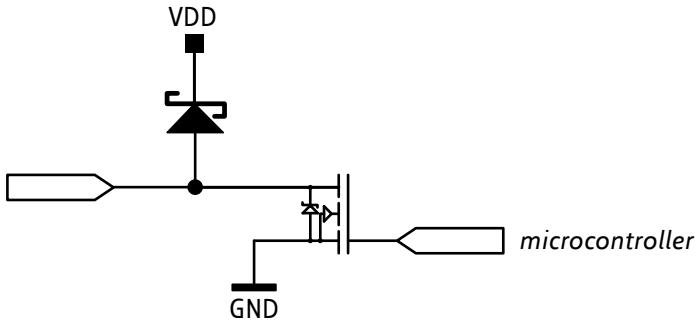

Figure 3.9 General purpose output OUT_1

In contrast OUT_0 is able to supply +5V (100mA max.) to an external load. An integrated P-channel MOSFET allows to switch on / off this +5V supply in software (see figure below). This output might be used in order to supply +5V to an external encoder circuit.

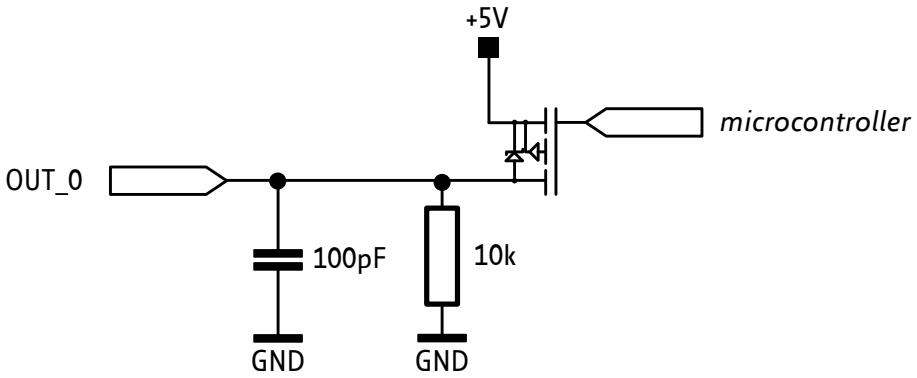

Figure 3.10 General purpose output OUT_0

3.2.3 Motor Connector

As motor connector a 4pin JST PH-series 2mm pitch single row connector is available. The motor connector is used for connecting the four motor wires of the two motor coils of the bipolar stepper motor to the electronics.



Pin	Label	Direction	Description
1	OB2	Output	Pin 2 of motor coil B
2	OB1	Output	Pin 1 of motor coil B
3	OA2	Output	Pin 2 of motor coil A
4	OA1	Output	Pin 1 of motor coil A

Table 3.5 Motor connector

Example for connecting the QSH4218 NEMA 17 / 42mm stepper motors:

TMCM-1140	QS4218 Motor		
Motor connector pin	**Cable color**	**Coil**	**Description**
1	Red	B	Motor coil B pin 1
2	Blue	B-	Motor coil B pin 2
3	Green	A-	Motor coil A pin 2
4	Black	A	Motor coil A pin 1

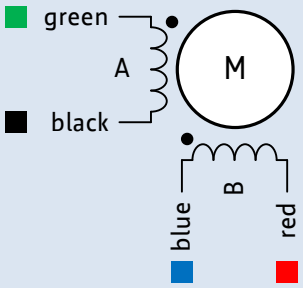

3.2.4 Mini-USB Connector

A 5pin mini-USB connector is available on-board for serial communication (as alternative to the CAN and RS485 interface). This module supports USB 2.0 Full-Speed (12Mbit/s) connections.

CAN interface will be de-activated as soon as USB is connected due to internal sharing of hardware resources.



Pin	Label	Direction	Description
1	VBUS	Power (supply input)	+5V supply from host
2	D-	Bidirectional	USB Data –
3	D+	Bidirectional	USB Data +
4	ID	Power (GND)	Connected to signal and system ground
5	GND	Power (GND)	Connected to signal and system ground

Table 3.6 Connector for USB

For remote control and communication with a host system the TMCM-1140 provides a USB 2.0 full-speed (12Mbit/s) interface (mini-USB connector). As soon as a USB-Host is connected the module will accept commands via USB.

USB BUS POWERED OPERATION MODE

The TMCM-1140 supports both, USB self powered operation (when an external power is supplied via the power supply connector) and USB bus powered operation, (no external power supply via power supply connector).

On-board digital core logic will be powered via USB in case no other supply is connected (USB bus powered operation). The digital core logic comprehends the microcontroller itself and also the EEPROM. The *USB bus powered operation mode* has been implemented to enable configuration, parameter settings, read-outs, firmware updates, etc. by just connecting an USB cable between module and host PC. No additional cabling or external devices (e.g. power supply) are required.

Please note that the module might draw current from the USB +5V bus supply even in USB self powered operation depending on the voltage level of this supply.

Motor movements are not possible in this operation mode. Therefore, connect the power connector and change to *USB self powered operation mode*.

4 Reset to Factory Defaults

It is possible to reset the TMCM-1140 to factory default settings without establishing a communication link. This might be helpful in case communication parameters of the preferred interface have been set to unknown values or got accidentally lost.

For this procedure two pads on the bottom side of the board have to be shortened.

Please perform the following steps:

1. Power supply off and USB cable disconnected
2. Short two pads as marked in Figure 4.1
3. Power up board (power via USB is sufficient for this purpose)
4. Wait until the on-board red and green LEDs start flashing fast (this might take a while)
5. Power-off board (disconnect USB cable)
6. Remove short between pads
7. After switching on power-supply / connecting USB cable all permanent settings have been restored to factory defaults

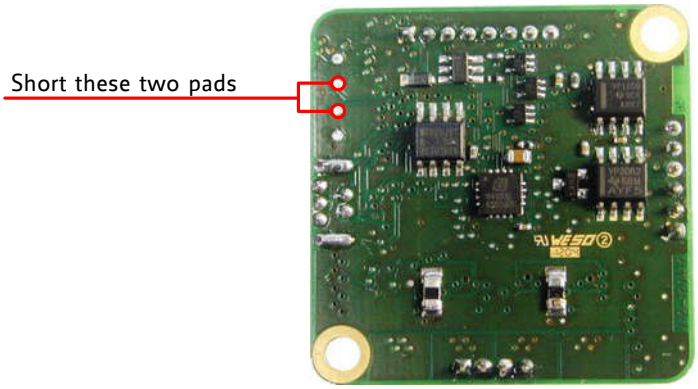

Figure 4.1 Reset to factory default settings

5 On-Board LEDs

The board offers two LEDs in order to indicate board status. The function of both LEDs is dependent on the firmware version. With standard TMCL firmware the green LED should be flashing slowly during operation and the red LED should be off.

When there is no valid firmware programmed into the board or during firmware update the red and green LEDs are permanently on.

BEHAVIOR OF LEDS WITH STANDARD TMCL FIRMWARE

Status	Label	Description
Heartbeat	Run	This green LED flashes slowly during operation.
Error	Error	This red LED lights up if an error occurs.

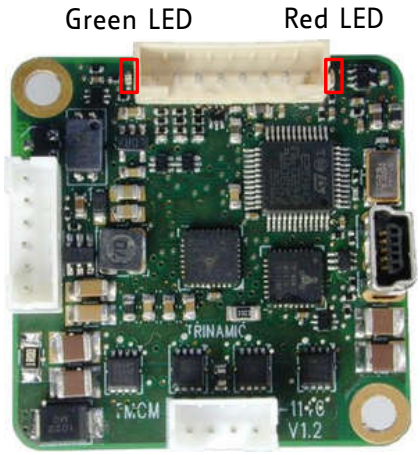

Figure 5.1 On-board LEDs

6 Operational Ratings

The operational ratings show the intended or the characteristic ranges and should be used as design values.

In no case shall the maximum values be exceeded!

Symbol	Parameter	Min	Typ	Max	Unit
VDD	Power supply voltage for operation	9	12… 24	28	V
I_{COIL_peak}	Motor coil current for sine wave **peak** (chopper regulated, adjustable via software)	0		2.8	A
I_{COIL_RMS}	Continuous motor current (**RMS**)	0		2.0	A
I_{DD}	Power supply current		<< I_{COIL}	1.4 * I_{COIL}	A
T_{ENV}	Environment temperature at rated current (no forced cooling required)	Tbd		50	°C

Table 6.1 General operational ratings of module

OPERATIONAL RATINGS OF MULTIPURPOSE I/OS

Symbol	Parameter	Min	Typ	Max	Unit
V_{OUT_1}	Voltage at open drain output OUT_1	0		+VDD	V
I_{OUT_1}	Output sink current of open drain output OUT_1			1	A
V_{OUT_0}	Voltage at output OUT_0 (when switched on)		+5		V
I_{OUT_0}	Output source current for OUT_0			100	mA
$V_{IN_0/1/2}$	Input voltage for IN_0, IN_1, IN_2 (digital inputs)	0		+VDD	V
$V_{IN_L\ 0/1/2}$	Low level voltage for IN_0, IN_1 and IN_2	0		1.1	V
$V_{IN_H\ 0/1/2}$	High level voltage for IN_0, IN_1 and IN_2	3.4		+VDD	V
V_{AIN_1}	Measurement range for analog input AIN_1	0		+10	V

Table 6.2 Operational ratings of multipurpose I/Os

7 Functional Description

The TMCM-1140 is a highly integrated controller/driver module which can be controlled via several serial interfaces. Communication traffic is kept low since all time critical operations (e.g. ramp calculations) are performed on board. The nominal supply voltage of the unit is 24V DC. The module is designed for both, standalone operation and direct mode. Full remote control of device with feedback is possible. The firmware of the module can be updated via any of the serial interfaces.

In Figure 7.1 the main parts of the TMCM-1140 are shown:

- the microprocessor, which runs the TMCL operating system (connected to TMCL memory),
- the motion controller, which calculates ramps and speed profiles internally by hardware,
- the power driver with stallGuard2 and its energy efficient coolStep feature,
- the MOSFET driver stage, and
- the sensOstep encoder with resolutions of 10bit (1024 steps) per revolution.

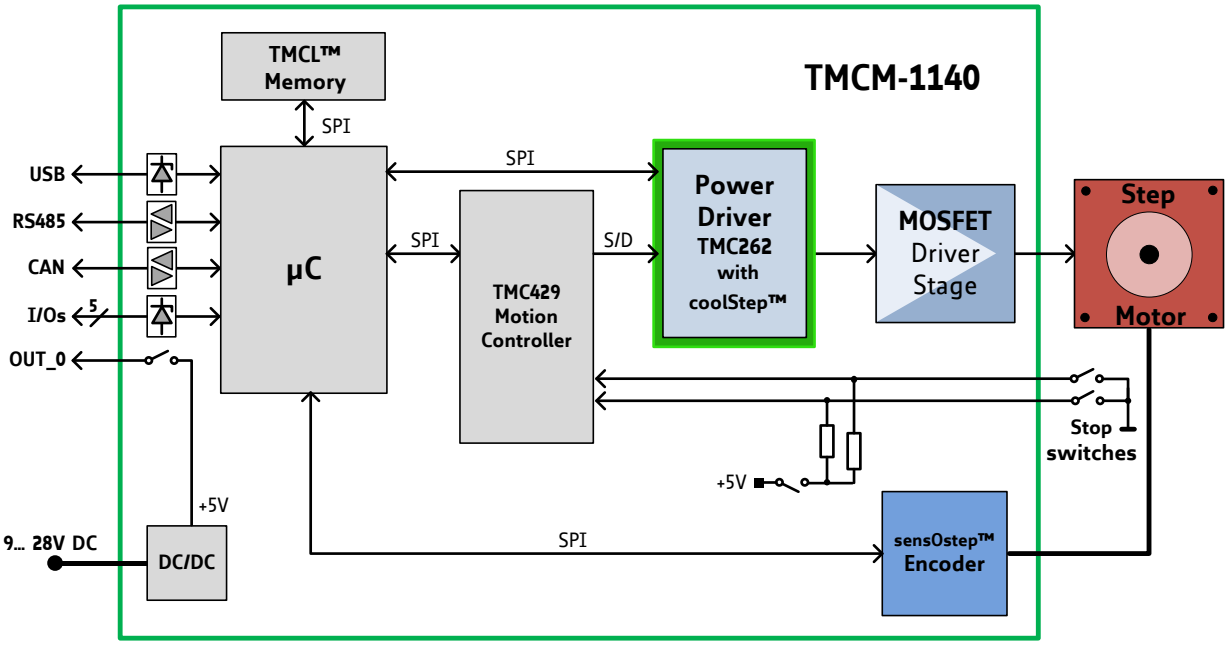

Figure 7.1 Main parts of the TMCM-1140

The TMCM-1140 comes with the PC based software development environment TMCL-IDE for the Trinamic Motion Control Language (TMCM). Using predefined TMCL high level commands like *move to position* a rapid and fast development of motion control applications is guaranteed.

Please refer to the TMCM-1140 Firmware Manual for more information about TMCL commands.

8 TMCM-1140 Operational Description

8.1 Calculation: Velocity and Acceleration vs. Microstep and Fullstep Frequency

The values of the parameters sent to the TMC429 do not have typical motor values like rotations per second as velocity. But these values can be calculated from the TMC429 parameters as shown in this section.

PARAMETERS OF TMC429

Signal	Description	Range
f_{CLK}	clock-frequency	16 MHz
velocity	-	0... 2047
a_max	maximum acceleration	0... 2047
pulse_div	divider for the velocity. The higher the value is, the less is the maximum velocity default value = 0	0... 13
ramp_div	divider for the acceleration. The higher the value is, the less is the maximum acceleration default value = 0	0... 13
Usrs	microstep-resolution (microsteps per fullstep = 2^{usrs})	0... 8 (a value of 7 or 8 is internally mapped to 6 by the TMC429)

Table 8.1 TMC429 velocity parameters

MICROSTEP FREQUENCY

The microstep frequency of the stepper motor is calculated with

$$usf[Hz] = \frac{f_{CLK}[Hz] \cdot velocity}{2^{pulse_div} \cdot 2048 \cdot 32}$$ with usf: microstep-frequency

FULLSTEP FREQUENCY

To calculate the fullstep frequency from the microstep frequency, the microstep frequency must be divided by the number of microsteps per fullstep.

$$fsf[Hz] = \frac{usf[Hz]}{2^{usrs}}$$ with fsf: fullstep-frequency

The change in the pulse rate per time unit (pulse frequency change per second – the ***acceleration a)*** is given by

$$a = \frac{f_{CLK}{}^2 \cdot a_{\max}}{2^{pulse_div+ramp_div+29}}$$

This results in acceleration in fullsteps of:

$$af = \frac{a}{2^{usrs}}$$ with af: acceleration in fullsteps

EXAMPLE:

Signal	value
f_{CLK}	16 MHz
velocity	1000
a_max	1000
pulse_div	1
ramp_div	1
usrs	6

$$msf = \frac{16\,MHz \cdot 1000}{2^1 \cdot 2048 \cdot 32} = \underline{\underline{122070.31\,Hz}}$$

$$fsf[Hz] = \frac{122070.31}{2^6} = \underline{\underline{1907.34 Hz}}$$

$$a = \frac{(16Mhz)^2 \cdot 1000}{2^{1+1+29}} = \underline{\underline{119.21 \frac{MHz}{s}}}$$

$$af = \frac{119.21 \frac{MHz}{s}}{2^6} = \underline{\underline{1.863 \frac{MHz}{s}}}$$

CALCULATION OF THE NUMBER OF ROTATIONS

A stepper motor has e.g. 72 fullsteps per rotation.

$$RPS = \frac{fsf}{fullsteps\ per\ rotation} = \frac{1907.34}{72} = 26.49$$

$$RPM = \frac{fsf \cdot 60}{fullsteps\ per\ rotation} = \frac{1907.34 \cdot 60}{72} = 1589.46$$

9 Life Support Policy

TRINAMIC Motion Control GmbH & Co. KG does not authorize or warrant any of its products for use in life support systems, without the specific written consent of TRINAMIC Motion Control GmbH & Co. KG.

Life support systems are equipment intended to support or sustain life, and whose failure to perform, when properly used in accordance with instructions provided, can be reasonably expected to result in personal injury or death.

© TRINAMIC Motion Control GmbH & Co. KG 2012

Information given in this data sheet is believed to be accurate and reliable. However neither responsibility is assumed for the consequences of its use nor for any infringement of patents or other rights of third parties, which may result from its use.

Specifications are subject to change without notice.



10 Revision History

10.1 Document Revision

Version	Date	Author GE - Göran Eggers SD - Sonja Dwersteg	Description
0.90	2011-DEC-22	GE	Initial version
0.91	2012-MAY-02	GE	Updated for TMCM-1140_V11 pcb version
1.00	2012-JUN-12	SD	First complete version including new chapters about: - reset to factory defaults, and - LEDs
1.01	2012-JUL-27	SD	Internal circuit of inputs corrected.

Table 10.1 Document revision

10.2 Hardware Revision

Version	Date	Description
TMCM-1040_V10	2011-MAR-08	Initial version
TMCM-1140_V11	2011-JUL-19	- Optimization of multipurpose I/O circuits - Clock generation and distribution changed (16MHz oscillator)
TMCM-1140_V12	2012-APR-12	- Further cost optimization incl. different sensor IC with 10bit max. resolution

Table 10.2 Hardware revision

11 References

[TMCM-1140 TMCL] TMCM-1140 TMCL Firmware Manual
[TMC262] TMC262 Datasheet
[TMC429] TMC429 Datasheet
[TMCL-IDE] TMCL-IDE User Manual

Please refer to www.trinamic.com.